2011
MAZDA MX-5

Owner's Manual

Image photo

8BR4 Form No. 8BR4-EC-10F (Part No. 9999-EC-031C-11)

北米　英/仏

Zoom-Zoom

All children instinctively know it.

A few adults still remember it.

One unique car company refuses to outgrow it.

In grown-up language, it means the exhilaration and

liberation that come from experiencing sheer motion.

But as usual, children put it much better and simply call it " Go Zoom-Zoom."

We practice it every day.

It's why we build the kind of cars we do.

Zoom-Zoom.

Can we re-awaken it in you today?

A Word to Mazda Owners

Thank you for choosing a Mazda. We at Mazda design and build vehicles with complete customer satisfaction in mind.

To help ensure enjoyable and trouble-free operation of your Mazda, read this manual carefully and follow its recommendations.

An Authorized Mazda Dealer knows your vehicle best. So when maintenance or service is necessary, that's the place to go.

Our nationwide network of Mazda professionals is dedicated to providing you with the best possible service.

We assure you that all of us at Mazda have an ongoing interest in your motoring pleasure and in your full satisfaction with your Mazda product.

Mazda Motor Corporation
HIROSHIMA, JAPAN

Important Notes About This Manual
Keep this manual in the glove box as a handy reference for the safe and enjoyable use of your Mazda. Should you resell the vehicle, leave this manual with it for the next owner.

All specifications and descriptions are accurate at the time of printing. Because improvement is a constant goal at Mazda, we reserve the right to make changes in specifications at any time without notice and without obligation.

Event Data Recorder
This vehicle is equipped with an event data recorder. In the event of a crash, this device records data related to vehicle dynamics and safety systems for a short period of time. These data can help provide a better understanding of the circumstances in which crashes and injuries occur and lead to the designing of safer vehicles.

Air Conditioning and the Environment
Your Mazda's genuine air conditioner is filled with HFC134a (R134a), a refrigerant that has been found not to damage the earth's ozone layer. If the air conditioner does not operate properly, consult an Authorized Mazda Dealer.

Perchlorate
Certain components of this vehicle such as [air bag modules, seat belt pretensioners, lithium batteries, ...] may contain Perchlorate Material– Special handling may apply for service or vehicle end of life disposal. See www.dtsc.ca.gov/hazardouswaste/perchlorate.

Please be aware that this manual applies to all models, equipment and options. As a result, you may find some explanations for equipment not installed on your vehicle.

©2010 Mazda Motor Corporation
Printed in Japan Nov. 2010(Print2)

How to Use This Manual

We want to help you get the most driving pleasure from your vehicle. Your owner's manual, when read from cover to cover, can do that in many ways.

Illustrations complement the words of the manual to best explain how to enjoy your Mazda. By reading your manual, you can find out about the features, important safety information, and driving under various road conditions.

The symbol below in this manual means “Do not do this” or “Do not let this happen”.

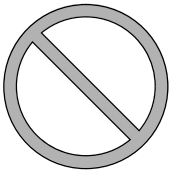

Index: A good place to start is the Index, an alphabetical listing of all information in your manual.

You'll find several WARNINGs, CAUTIONs, and NOTEs in the manual.

⚠ WARNING

A WARNING indicates a situation in which serious injury or death could result if the warning is ignored.

⚠ CAUTION

A CAUTION indicates a situation in which bodily injury or damage to your vehicle, or both, could result if the caution is ignored.

NOTE

A NOTE provides information and sometimes suggests how to make better use of your vehicle.

The symbol below, located on some parts of the vehicle, indicates that this manual contains information related to the part. Please refer to the manual for a detailed explanation.

Table of Contents

Your Vehicle at a Glance 1

Interior, exterior views and part identification of your Mazda.

Essential Safety Equipment 2

Use of safety equipment, including seats, seat belt system, child-restraint systems and SRS air bags.

Knowing Your Mazda 3

Explanation of basic operations and controls; opening/closing and adjustment of various parts.

Before Driving Your Mazda 4

Important information about driving your Mazda.

Driving Your Mazda 5

Explanation of instruments and controls.

Interior Comfort 6

Use of various features for drive comfort, including air-conditioning and audio system.

In Case of an Emergency 7

Helpful information on what to do in an emergency.

Maintenance and Care 8

How to keep your Mazda in top condition.

Customer Information and Reporting Safety Defects 9

Important consumer information including warranties and add-on equipment.

Specifications 10

Technical information about your Mazda.

Index 11

1 Your Vehicle at a Glance

Interior, exterior views and part identification of your Mazda.

Interior Overview **1-2**
Interior Equipment (View A) 1-2
Interior Equipment (View B) 1-3
Interior Equipment (View C) 1-4

Exterior Overview **1-5**
Front 1-5
Rear 1-6

Interior Equipment (View A)

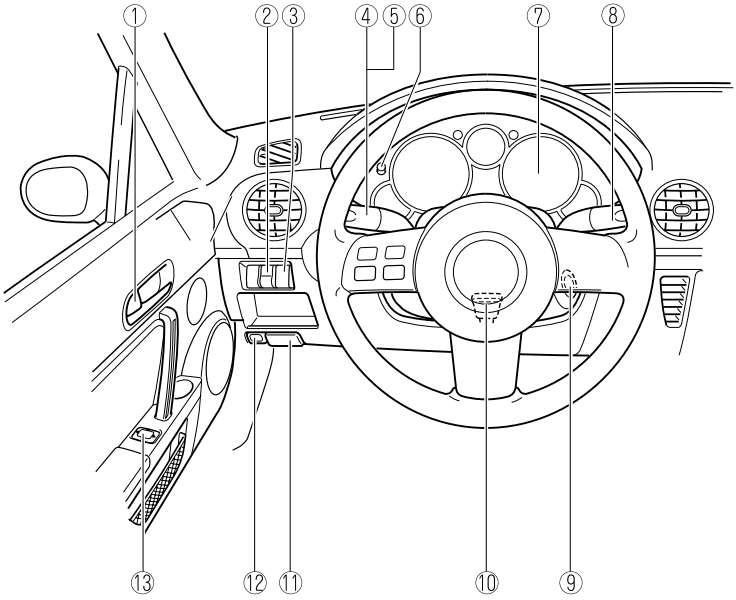

① Door-lock knob ..... page 3-31
② DSC OFF switch ..... page 5-27
③ Passenger air bag deactivation switch ..... page 2-43
④ Lighting control ..... page 5-57
⑤ Turn and lane-change signal ..... page 5-59
⑥ Dashboard illumination knob ..... page 5-41
⑦ Instrument cluster ..... page 5-37
⑧ Wiper and washer lever ..... page 5-60
⑨ Ignition switch ..... page 5-2
⑩ Tilt wheel release lever ..... page 3-73
⑪ Hood release handle ..... page 3-42
⑫ Trunk release button ..... page 3-33
⑬ Outside mirror switch ..... page 3-73

Interior Equipment (View B)

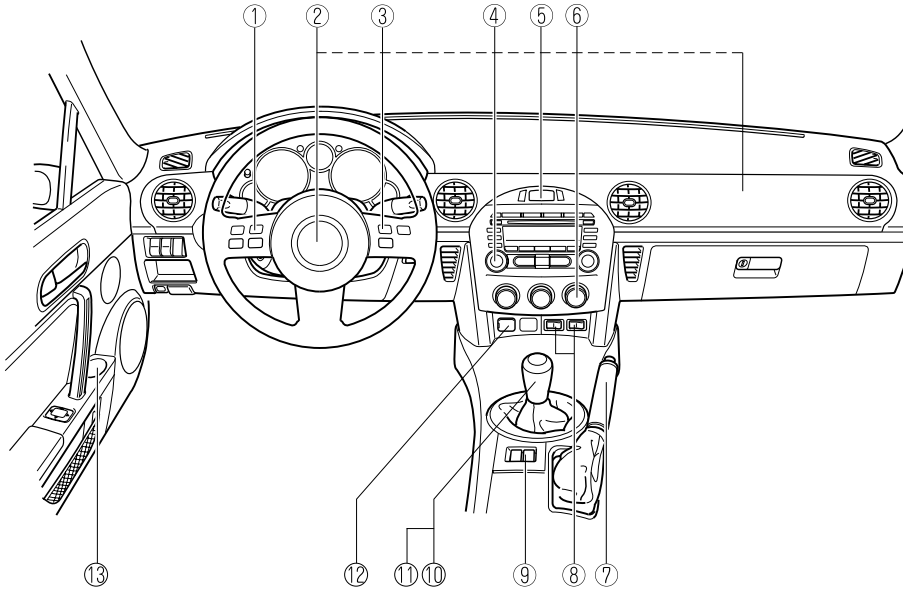

① Audio control switch ..... page 6-56
② SRS air bags ..... page 2-30
③ Cruise control switch ..... page 5-22
④ Audio system ..... page 6-15
⑤ Hazard warning flasher switch ..... page 5-62
⑥ Climate control system ..... page 6-2
⑦ Parking brake ..... page 5-7
⑧ Seat warmer switches ..... page 2-5
⑨ Power window switches ..... page 3-37
⑩ MT shift lever ..... page 5-11
⑪ AT shift lever (Sport AT) ..... page 5-14
⑫ Accessory socket ..... page 6-83
⑬ Multi-pocket ..... page 6-81

Interior Equipment (View C)

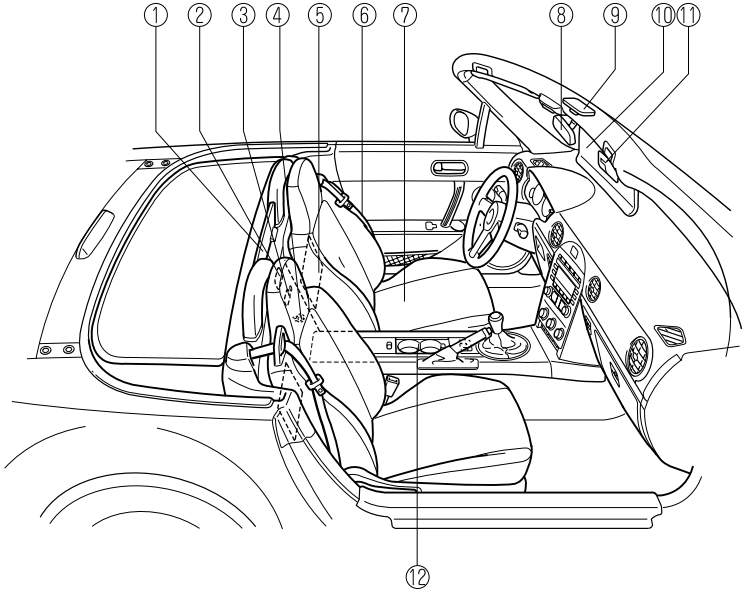

① Windblocker ..... page 6-84
② Convertible top unlock lever ..... page 3-46
③ Seat side box ..... page 6-82
④ Remote fuel-filler lid release ..... page 3-40
⑤ Back trim storage box ..... page 6-82
⑥ Seat belt ..... page 2-7
⑦ Seats ..... page 2-2
⑧ Rearview mirror ..... page 3-74
⑨ Interior light ..... page 6-80
⑩ Sunvisor ..... page 6-80
⑪ Vanity mirror ..... page 6-80
⑫ Cup holder ..... page 6-81

Front

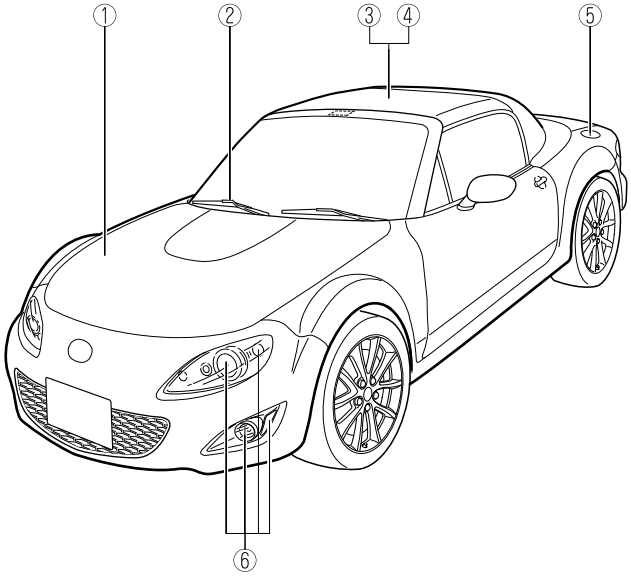

① Hood ..... page 3-42
② Windshield wiper blades ..... page 8-25
③ Convertible top (Power retractable hardtop) ..... page 3-48
④ Convertible top (Soft top) ..... page 3-43
⑤ Fuel-filler lid ..... page 3-40
⑥ Light bulbs ..... page 8-36

Exterior Overview

Rear

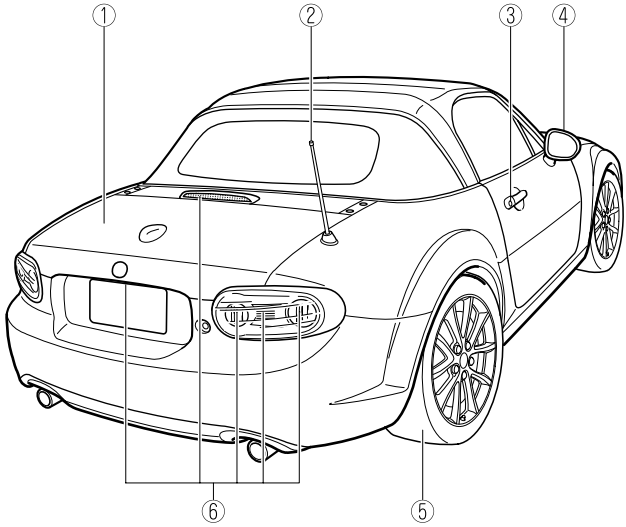

① Trunk lid ..... page 3-33
② Antenna ..... page 6-14
③ Doors and keys ..... page 3-30
④ Outside mirror ..... page 3-73
⑤ Tires ..... page 8-30
⑥ Light bulbs ..... page 8-36

2 Essential Safety Equipment

Use of safety equipment, including seats, seat belt system, child-restraint systems and SRS air bags.

Seats 2-2
Seats 2-2
Non-Adjustable Head Restraints 2-4
Seat Warmer* 2-5

Seat Belt Systems 2-7
Seat Belt Precautions 2-7
Seat Belt 2-11
Seat Belt Pretensioner and Load Limiting Systems 2-13
Seat Belt Extender 2-15
Seat Belt Warning Light/Beep 2-16

Child Restraint 2-18
Child Restraint Precautions 2-18
Child-Restraint System Installation Position 2-23
Installing a Child-Restraint System 2-24
LATCH Child-Restraint System 2-27

SRS Air Bags 2-30
Supplemental Restraint System (SRS) Precautions 2-30
Supplemental Restraint System Components 2-35
How the SRS Air Bags Work 2-36
SRS Air Bag Deployment Criteria 2-40
Limitations to SRS Air Bag 2-41
Passenger Air Bag Deactivation Switch 2-43
Driver and Passenger Occupant Classification System 2-47
Monitoring and Maintenance 2-51

*Some models.

Seats

WARNING

Do not modify or replace the front seats:

Modifying or replacing the front seats such as replacing the upholstery or loosening any bolts is dangerous. The front seats contain air bag components essential to the supplemental restraint system. Such modifications could damage the supplemental restraint system and result in serious injury. Consult an Authorized Mazda Dealer if there is any need to remove or reinstall the front seats.

Do not drive with damaged front seats:

Driving with damaged front seats is dangerous. A collision, even one not strong enough to inflate the air bags, could damage the front seats which contain essential air bag components. If there was a subsequent collision, an air bag may not deploy which could lead to injuries. Always have an Authorized Mazda Dealer inspect the front seats, front seat belt pretensioners and air bags after a collision.

Make sure the adjustable components of a seat are locked in place:

Adjustable seats and seatbacks that are not securely locked are dangerous. In a sudden stop or collision, the seat or seatback could move, causing injury. Make sure the adjustable components of the seat are locked in place by attempting to slide the seat forward and backward and rocking the seatback.

Adjust the driver's seat only when the vehicle is stopped:

Adjusting the driver's seat while the vehicle is moving is dangerous. The driver could lose control of the vehicle and have an accident.

CAUTION

Be careful not to place your hands and fingers around moving parts of the front seat when adjusting the seat positions to prevent injury.

▼Seat Slide

To move a seat forward or backward, raise the lever and slide the seat to the desired position and release the lever.

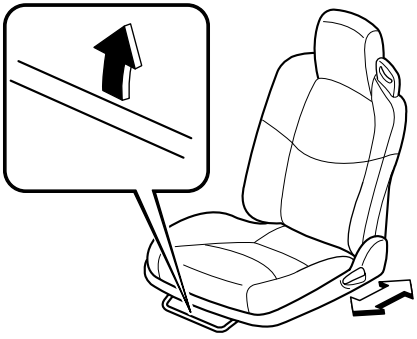

Make sure the lever returns to its original position and the seat is locked in place by attempting to push it forward and backward.

▼Seat Recline

WARNING

Do not drive with either front seat reclined:

Sitting in a reclined position while the vehicle is moving is dangerous because you do not get the full protection from seat belts. During sudden braking or a collision, you can slide under the lap belt and suffer serious internal injuries. For maximum protection, sit well back and upright.

Always sit in the passenger seat properly with the seatback upright and feet on the floor:

Your passenger seat has weight sensors, sitting in the passenger seat improperly out of position or with the seatback reclined too far while the vehicle is moving is dangerous as it can take off weight from the seat bottom and affect the weight determination of the passenger sensing system. As a result the passenger will not have the supplementary protection of the air bag and seat belt pretensioner, which could result in serious injury. Always sit upright against the seatback with your feet on the floor.

Do not drive with the seatback unlocked:

All of the seatbacks play an important role in your protection in a vehicle. Leaving the seatback unlocked is dangerous as it can allow passengers to be ejected or thrown around and baggage to strike occupants in a sudden stop or collision, resulting in severe injury. After adjusting the seatback at any time, even when there are no other passengers, rock the seatback to make sure it is locked in place.

To change the seatback angle, lean forward slightly while raising the lever. Then lean back to the desired position and release the lever.

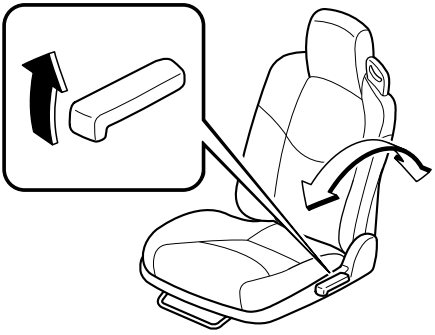

Make sure the lever returns to its original position and the seatback is locked in place by attempting to push it forward and backward.

⚠ CAUTION

When returning a rear-reclined seatback to its upright position, make sure you hold onto the seatback with your other hand while operating the lever. If the seatback is not supported, it will flip forward suddenly and could cause injury.

▼Height Adjustment (Driver's Seat)*

To adjust the seat height, move the lever up or down.

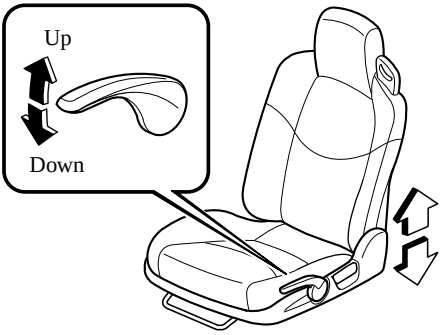

Non-Adjustable Head Restraints

Your vehicle is equipped with non-adjustable head restraints on the driver's and front passenger's seatbacks. The non-adjustable head restraints consist of a trimmed foam covering over the upper structure of the seatbacks and are intended to help protect you and the front passenger from neck injury. Adjust the seatbacks to their upright, on-road positions so that the head restraint is positioned as close as possible to the back of your head.

⚠ WARNING

Make sure the seatbacks are properly adjusted to their upright, on-road positions before the vehicle is driven:

Driving with the seatbacks not adjusted properly is dangerous. With no support behind your head, your neck could be seriously injured in a collision.

*Some models.

Seat Warmer*

The driver and passenger seats can be warmed by rotating the applicable seat warmer dial while the ignition is switched ON.
The seat temperature increases as the number on the dial increases. When the seat warmers are not in use, rotate the seat warmer dials to 0.

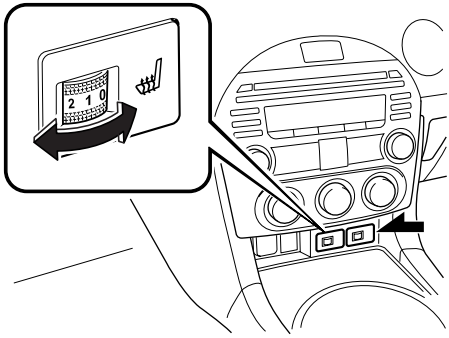

WARNING

- *Be careful when using the seat warmer. The heat from the seat warmer may be too hot for some people, as indicated below, and could cause a low-temperature burn.*
  - *Infants, small babies, elderly people, and physically challenged people*
  - *People with delicate skin*
  - *People who are excessively fatigued*
  - *People who are intoxicated*
  - *People who have taken sleep-inducing medicine such as sleeping pills or cold medicine*
- *Do not use the seat warmer with anything having high moisture-retention ability such as a blanket or cushion on the seat. The seat may be heated excessively and cause a low-temperature burn.*
- *Do not use the seat warmer even when taking a short nap in the vehicle. The seat may be heated excessively and cause a low-temperature burn.*
- *Do not place heavy objects with sharp projections on the seat, or insert needles or pins into it. This could cause the seat to become excessively heated and result in injury from a minor burn.*

CAUTION

Do not use organic solvents to clean the seat. It may damage the seat surface and the heater.

*Some models.

NOTE
Use the seat warmer when the engine is running, and do not continue to use it for a long period of time.

Seat Belt Precautions

Seat belts help to decrease the possibility of severe injury during accidents and sudden stops. Mazda recommends that the driver and passenger always wear seat belts.

All of the seat belt retractors are designed to keep the lap/shoulder belts out of the way when not in use.

The driver's seat belt has no provisions for child-restraint systems and has only an emergency locking mode. The driver may wear it comfortably, and it will lock during a collision.

However, the passenger's seat lap/shoulder belt retractors operate in two modes: emergency locking mode, and for child-restraint systems, automatic locking mode.
Your vehicle is equipped with LATCH lower anchors for securing the LATCH child-restraint system in the passenger seat but there is no child-restraint tether available. As there is no rear seat on this vehicle, the preferred location for children, following the manufacturer's instructions on the LATCH child restraint-system and this owner's manual is important (page 2-27).

WARNING

Always wear your seat belt and make sure all occupants are properly restrained:
Not wearing a seat belt is extremely dangerous. During a collision, occupants not wearing seat belts could hit someone or things inside the vehicle or even be thrown out of the vehicle. They could be seriously injured or even killed. In the same collision, occupants wearing seat belts would be much safer.

Do not wear twisted seat belts:
Twisted seat belts are dangerous. In a collision, the full width of the belt is not available to absorb the impact. This puts more force on the bones beneath the belt, which could cause serious injury or death. So, if your seat belt is twisted, you must straighten the seat belt to remove any twists and to allow the full width of the belt to be used.

Never use one seat belt on more than one person at a time:
Using one seat belt for more than one person at a time is dangerous. A seat belt used in this way cannot spread the impact forces properly and the two passengers could be crushed together and seriously injured or even killed. Never use one belt for more than one person at a time and always operate the vehicle with each occupant properly restrained.

Do not operate a vehicle with a damaged seat belt:
Using a damaged seat belt is dangerous. An accident could damage the belt webbing of the seat belt in use. A damaged seat belt cannot provide adequate protection in a collision. Have an Authorized Mazda Dealer inspect all seat belt systems in use during an accident before they are used again.

Have your seat belts changed immediately if the pretensioner or load limiter has been expended:
Always have an Authorized Mazda Dealer immediately inspect the seat belt pretensioners and air bags after any collision. Like the air bags, the seat belt pretensioners and load limiters will only function once and must be replaced after any collision that caused them to deploy. A seat belt with an expended pretensioner or load limiter is still better than wearing no seat belt at all; however, if the seat belt pretensioners and load limiters are not replaced, the risk of injury in a collision will increase.

⚠ CAUTION

Belt retraction may become difficult if the belts and seat belt guides are soiled, so try to keep them clean. For more details about cleaning the seat belts, refer to "Cleaning the Lap/Shoulder Belt Webbing" (page 8-58).

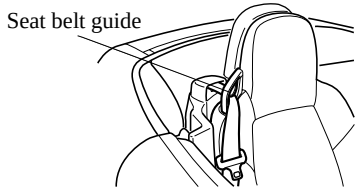

▼Pregnant Women and Persons with Serious Medical Conditions

Pregnant women should always wear seat belts. Ask your doctor for specific recommendations.
The lap belt should be worn SNUGLY AND AS LOW AS POSSIBLE OVER THE HIPS.
The shoulder belt should be worn across your shoulder properly, but never across the stomach area.
Persons with serious medical conditions also should wear seat belts. Check with your doctor for any special instructions regarding specific medical conditions.

▼Emergency Locking Mode

In the emergency locking mode, the belt remains comfortable on the occupant and the retractor will lock in position during a collision. When the seat belt is fastened, it will always be in the emergency locking mode until it is switched to automatic locking mode by pulling it all the way out to its full length. If the belt feels tight and hinders comfortable movement while the vehicle is stopped or in motion, it may be in the automatic locking mode because the belt has been pulled too far out. To return the belt to the more comfortable emergency locking mode, wait until the vehicle has stopped in a safe, level area, retract the belt fully to convert it back to emergency locking mode and then extend it around you again.
If the belt is locked and cannot be pulled out, retract the belt once, and then try pulling it out slowly. If this fails, pull the belt strongly one time and loosen, then pull it out again slowly.

▼Automatic Locking Mode

To enable seat belt automatic locking mode, pull it all the way out and connect it as instructed on the child-restraint system. It will retract down to the child-restraint system and stay locked on it. If the LATCH lower anchors are not used alone for LATCH style junior seats and infant carriers without tethers, always use the automatic locking mode to keep the child-restraint system from shifting to an unsafe position in the event of an accident. See the section on child restraint (page 2-18).

Seat Belt

WARNING

Always wear the seat belt with it correctly routed in its guide:

Wearing a seat belt without the seat belt routed in its guide is dangerous because the seat belt would not be able to provide adequate protection in an accident, which could result in serious injury.

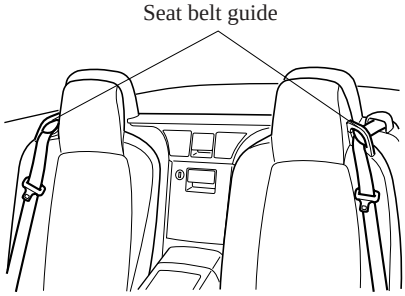

▼Fastening the Seat Belt

1. Grasp the seat belt tongue.
2. Slowly pull out the lap/shoulder belt.

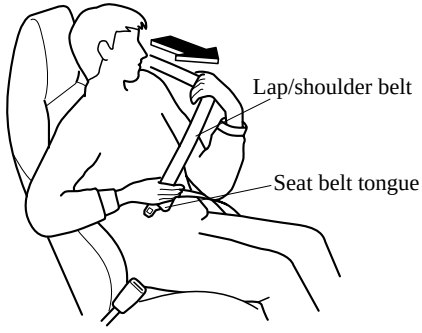

3. Insert the seat belt tongue into the seat belt buckle until you hear a click sound.

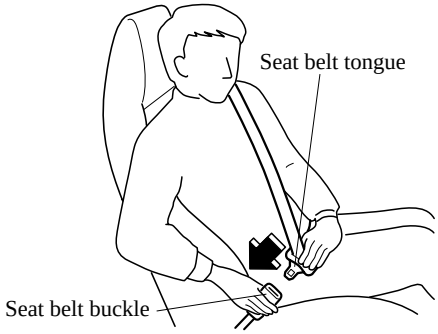

WARNING

Positioning the Shoulder Portion of the Seat Belt:

Improper positioning of the shoulder portion of the seat belt is dangerous. Always make sure the shoulder portion of the seat belt is positioned across your shoulder and near your neck, but never under your arm, on your neck, or on your upper arm.

4. Position the lap belt as low as possible, not on the abdominal area, then adjust the shoulder belt so that it fits snugly against your body.

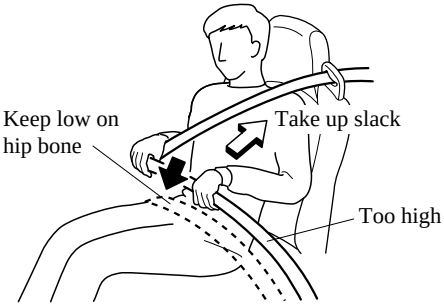

WARNING

Positioning the Lap Portion of the Seat Belt:

The lap portion of the seat belt worn too high is dangerous. In a collision, this would concentrate the impact force directly on the abdominal area, causing serious injury. Wear the lap portion of the belt snugly and as low as possible.

▼Unfastening the Seat Belt

Depress the button on the seat belt buckle. If the belt does not fully retract, pull it out and check for kinks or twists. Then make sure it remains untwisted as it retracts.

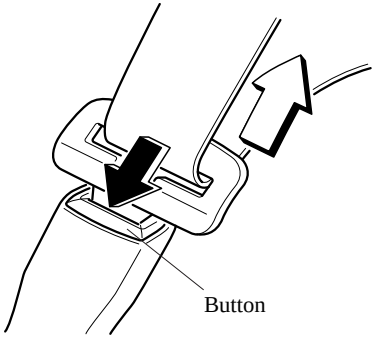

NOTE

If a belt does not fully retract, inspect it for kinks and twists. If it is still not retracting properly, have it inspected at an Authorized Mazda Dealer.

▼Seat Belt Caution Label

A caution label has been placed inside the sleeve of the lap portion of the driver's seat belt. When an accident occurs while the seat belt is in use, the resulting stress on the seat belt will cause an indicator with the words “REPLACE BELT” visible on it to be pulled out of the sleeve below the caution label. This indicates that **THE SEAT BELT MUST BE REPLACED**.

Also note that if at any time the seat belt has undergone stress because of an accident or other reason, damage to the seat belt's webbing, metal fittings, or anchor bolt may have occurred, even though nothing appears to be wrong with the seat belt. For this reason we recommend that the seat belt be replaced after it has undergone stress, whether or not the indicator has been pulled out.

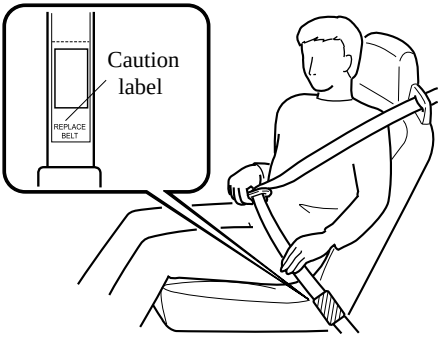

Seat Belt Pretensioner and Load Limiting Systems

For optimum protection, the driver and passenger seat belts are equipped with pretensioner and load limiting systems. For both these systems to work properly you must wear the seat belt properly.

Pretensioners:
In moderate or severe frontal or near-frontal accidents, the air bag and pretensioner systems deploy simultaneously. The seat belt retractors remove slack quickly as the air bags are expanding. Any time the air bags and front seat belt pretensioners have fired they must be replaced.
In addition, the pretensioner system for the passenger, like the passenger air bag, is designed to only deploy in accordance with the total seated weight on the passenger seat (page 2-47) or when the passenger air bag deactivation switch turned to the ON position (page 2-43).

Load limiter:
The load limiting system releases belt webbing in a controlled manner to reduce belt force on the occupant's chest. While the most severe load on a seat belt occurs in frontal collisions, the load limiter has an automatic mechanical function and can activate in any accident mode with sufficient occupant movement.
Even if the pretensioners have not fired, the load limiting function must be checked by an Authorized Mazda Dealer after any collision.

⚠ WARNING

Wear seat belts only as recommended in this owner's manual:
Incorrect positioning of the driver and passenger seat belts is dangerous. Without proper positioning, the pretensioner and load limiting systems cannot provide adequate protection in an accident and this could result in serious injury. For more details about wearing seat belts, refer to "Fastening the seat belts" (page 2-11).

Have your seat belts changed immediately if the pretensioner or load limiter has been expended:
Always have an Authorized Mazda Dealer immediately inspect the seat belt pretensioners and air bags after any collision. Like the air bags, the seat belt pretensioners and load limiters will only function once and must be replaced after any collision that caused them to deploy. A seat belt with an expended pretensioner or load limiter is still better than wearing no seat belt at all; however, if the seat belt pretensioners and load limiters are not replaced, the risk of injury in a collision will increase.

Do not modify the components or wiring, or use electronic testing devices on the pretensioner system:

Modifying the components or wiring of the pretensioner system, including the use of electronic testing devices is dangerous. You could accidentally activate it or make it inoperable which would prevent it from activating in an accident. The occupants or repairers could be seriously injured.

Properly dispose of the pretensioner system:

Improper disposal of the pretensioner system or a vehicle with non-deactivated pretensioners is dangerous. Unless all safety procedures are followed, injury could result. Ask an Authorized Mazda Dealer how to safely dispose of the pretensioner system or how to scrap a pretensioner-equipped vehicle.

NOTE

- *The pretensioner system will activate in a moderate or greater frontal or near-frontal collision. It will not activate in most rollovers, side or rear impacts.*
  The pretensioner system for the passenger is designed to only deploy in accordance with the total seated weight on the passenger seat.
- *Some smoke (non-toxic gas) will be released when the air bags and pretensioners deploy. This does not indicate a fire. This gas normally has no effect on occupants, however, those with sensitive skin may experience light skin irritation. If residue from the deployment of the air bags or the pretensioner system gets on the skin or in the eyes, wash it off as soon as possible.*

▼Air Bag/Seat Belt Pretensioner System Warning Light

If the air bag/seat belt pretensioner system is working properly, the warning light illuminates when the ignition is switched ON or after the engine is cranked. The warning light turns off after a specified period of time.

A system malfunction is indicated if the warning light constantly flashes, constantly illuminates or does not illuminate at all when the ignition is switched ON. If any of these occur, consult an Authorized Mazda Dealer as soon as possible. The system may not work in an accident.

⚠ WARNING

Never tamper with the air bag/ pretensioner systems and always have an Authorized Mazda Dealer perform all servicing and repairs:

Self-servicing or tampering with the systems is dangerous. An air bag/ pretensioner could accidentally activate or become disabled causing serious injury or death.

Seat Belt Extender

If your seat belt is not long enough, even when fully extended, a seat belt extender may be available to you at no charge from your Authorized Mazda Dealer.
This extender will be only for you and for the particular vehicle and seat. Even if it plugs into other seat belts, it may not hold in the critical moment of a crash.
When ordering an extender, only order one that provides the necessary additional length to fasten the seat belt properly.
Please contact your Authorized Mazda Dealer for more information.

WARNING

Do not use a seat belt extender unless it is necessary:

Using a seat belt extender when not necessary is dangerous. The seat belt will be too long and not fit properly. In an accident, the seat belt will not provide adequate protection and you could be seriously injured. Only use the extender when it is required to fasten the seat belt properly.

Do not use an improper extender:

Using a seat belt extender that is for another person or a different vehicle or seat is dangerous. The seat belt will not provide adequate protection and the user could be seriously injured in an accident. Only use the extender provided for you and for the particular vehicle and seat. NEVER use the extender in a different vehicle or seat. If you sell your Mazda, do not leave your seat belt extender in the vehicle. It could be used accidentally by the new owner of the vehicle. After removing the seat belt extender, discard it. Never use the seat belt extender in any other vehicle you may own in the future.

Do not use an extender that is too long:

Using an extender that is too long is dangerous. The seat belt will not fit properly. In an accident, the seat belt will not provide adequate protection and you could be seriously injured. Do not use the extender or choose one shorter in length if the distance between the extender's buckle and the center of the user's body is less than 15 cm (6 in).

Do not leave a seat belt extender connected to the buckle:

Leaving a seat belt extender connected to the buckle without using the seat belt is dangerous. When the seat belt extender is connected to the driver's seat belt buckle (or passenger) seat, the SRS driver's (or passenger's) air bag system will determine that the driver (or passenger) is wearing the seat belt even if the driver (or passenger) is not wearing it. This condition could cause the driver's (or passenger's) air bag to not activate correctly and result in death or serious injury in the event of collision. Always wear the seat belt with the seat belt extender.

Do not use the seat belt extender when installing a child-restraint system on the passenger seat:

Using a seat belt extender to fasten a child-restraint system on any seat is dangerous. Always follow the child-restraint system manufacturer's installation instructions and never use a seat belt extender.

NOTE

When not in use, remove the seat belt extender and store it in the vehicle. If the seat belt extender is left connected, the seat belt extender might get damaged as it will not retract with the rest of the seat belt and can easily fall out of the door when not in use and be damaged. In addition, the seat belt warning light will not illuminate and function properly.

Seat Belt Warning Light/Beep

The seat belt warning light illuminates and a beep sound will be heard if the driver's seat belt is not fastened when the ignition is switched ON.

Conditions of operation

Condition	Result
The driver's seat belt is not fastened when the ignition is switched ON.	The warning light flashes and a beep sound will be heard for about 6 seconds.
The driver's seat belt is fastened while the warning light and the beep sound are activated.	The warning light turns off and the beep sound stops.
The driver's seat belt is fastened before the ignition is switched ON.	The warning light will not illuminate and the beep sound will not be heard.

▼Belt Minder

NOTE

Consult an Authorized Mazda Dealer to deactivate or restore the belt minder. Though the belt minder can be deactivated, doing so will defeat the purpose of the system to warn the driver and the front passenger in the event that their seat belts are not fastened. For the safety of the driver and front passenger, Mazda recommends not deactivating the belt minder.

Driver seated/Passenger not seated

The belt minder is a supplemental warning to the seat belt warning function. If the driver's seat belt is not fastened when the ignition is switched ON, the warning light/beep operates to give you further reminders according to the chart below.

Condition	Vehicle speed			
	Between 0 20 km/h (0 12 mph)		20 km/h (12 mph) or more	
Seat belt	○	×	○	×
Indicator				
Beep				♪

○ : Fastened
× : Unfastened
: Illuminated
: Flashing
♪ : Beep

Once the beep sound is heard, it continues sounding even if the vehicle speed lowers to 20 km/h (12 mph) or less until the seatbelt is fastened or the beep sound period has passed.

Driver seated/Passenger seated

The seat belt warning function reminds the passenger to fasten the seat belt according to the chart below.

Condition	Vehicle speed							
	Between 0 20 km/h (0 12 mph)				20 km/h (12 mph) or more			
Seat belt (Driver)	○	○	×	×	○	○	×	×
Seat belt (Passenger)	○	×	○	×	○	×	○	×
Indicator								
Beep						♪	♪	♪

○ : Fastened
× : Unfastened
: Illuminated
: Flashing
♪ : Beep

Placing heavy items on the passenger seat may cause the passenger seat belt warning function to operate depending on the weight of the item.

Once the beep sound is heard, it continues sounding even if the vehicle speed lowers to 20 km/h (12 mph) or less until the seatbelt is fastened or the beep sound period has passed.

NOTE

- *To allow the passenger seat weight sensor to function properly, do not place and sit on an additional seat cushion on the passenger seat. The sensor may not function properly because the additional seat cushion could cause sensor interference.*
- *When a small child sits on the passenger seat, it is possible that neither the warning light nor the warning beep operate.*

Child Restraint Precautions

Mazda strongly urges the use of child-restraint systems for children small enough to use them.

You are required by law to use a child-restraint system for children in the U.S. and Canada. Check your local and state or provincial laws for specific requirements regarding the safety of children riding in your vehicle.

Whatever child-restraint system you consider, please pick the appropriate one for the age and size of the child, obey the law and follow the instructions that come with the individual child-restraint system.

A child who has outgrown child-restraint systems should use seat belts, both lap and shoulder. If the shoulder belt crosses the neck or face, move the child closer to the center of the vehicle.

A rear-facing child-restraint system should **NEVER** be used on the passenger seat with the air bag system activated.
If a small child or infant in the passenger seat particularly a child secured in a rear-facing child-restraint system it is critically important that you consciously deactivate the passenger air bag and not simply rely on the passenger air bag deactivation indicator light being turned on at all times. In a collision, the force of an air bag slamming the child-restraint system rearwards could result in death to the child even if the child is properly belted. Be alert to the operation of the indicator light and BE SURE THE PASSENGER AIR BAG IS ALWAYS DEACTIVATED AS INDICATED BY PASSENGER AIR BAG DEACTIVATION INDICATOR LIGHT.
Passenger air bag deactivation indicator light

To reduce the chance of injuries caused by the deployment of the passenger air bag, there are two methods to deactivate the passenger air bag for a child's safety as follows however the surest way to avoid the passenger air bag not deploying is to use the key and turn off the passenger air bag and not rely on the passenger seat weight sensors, which will also detect other loads or objects on and around the passenger seat;

Passenger air bag deactivation switch
This switch should be used to deactivate the passenger front and side air bags and also the passenger seat belt pretensioner system if installing a child-restraint system on the passenger seat.
Make sure the passenger air bag deactivation switch is in the ON position except when a child-restraint system is installed on the passenger seat.
Refer to Passenger Air Bag Deactivation Switch on page 2-43.
Passenger seat weight sensors
These sensors deactivate the passenger front and side air bags and also the passenger seat belt pretensioner system when the passenger air bag deactivation indicator light illuminates.
When an infant or small child is seated on the passenger seat, the system shuts off the passenger air bag, so make sure the passenger air bag deactivation indicator light illuminates.
Refer to Passenger seat weight sensors on page 2-47.

LATCH Child-Restraint System
We have installed lower LATCH anchor points for LATCH style junior seats and infant carriers that work without tethers only. Any other child-restraint system that has an upper tether cannot be used in this vehicle because there is no tether anchor. A child-restraint system with a tether cannot be properly mounted in this vehicle unless the child restraint manufacturer provides instructions on mounting the child-restraint system with only seat belts in automatic locking mode. Even then, without a tether, the child-restraint system may move forward more easily in seat belts, further degrading the safety provided if you were to put the child restraint in a tether anchor equipped rear seat of another vehicle. The seat and head restraint is designed for maximum adult space utilization in this vehicle. Do not try to secure the tether to something else in the vehicle, as too much slack will result and the serious risk of injury or death to the child. Use the seat belts to properly secure the non-tethered child-restraint systems other than the LATCH junior seats and non-tethered infant carriers. Turn off the passenger air bag deactivation switch. To expose and use the lower LATCH anchor points, which are affixed to the body and not the seat, slide the seat all the way rearward which is the optimal vehicle seat position for all children in this two seat car.

⚠ WARNING

Use the correct size child-restraint system:

For effective protection in vehicle accidents and sudden stops, a child must be properly restrained using a seat belt or child-restraint system depending on age and size. If not, the child could be seriously injured or even killed in an accident.

Child Restraint

Follow the manufacturer's instructions and always keep the child-restraint system buckled down:

An unsecured child-restraint system is dangerous. In a sudden stop or a collision it could move causing serious injury or death to the child or other occupants. Make sure any child-restraint system is properly secured in place according to the child-restraint system manufacturer's instructions. When not in use, remove it from the vehicle or fasten it with a seat belt, or latch it down to BOTH LATCH lower anchors for LATCH child-restraint systems.

Always secure a child in a proper child-restraint system:

Holding a child in your arms while the vehicle is moving is extremely dangerous. No matter how strong the person may be, he or she cannot hold onto a child in a sudden stop or collision and it could result in serious injury or death to the child or other occupants. Even in a moderate accident, the child may be exposed to air bag forces that could result in serious injury or death to the child, or the child may be slammed into an adult, causing injury to both child and adult.

Always make sure the passenger air bag deactivation indicator light is illuminated when using a rear-facing child-restraint system:

Seating a child in a rear-facing child-restraint system that is installed on the passenger seat with the passenger air bag deactivation indicator light not illuminated is extremely dangerous. In an accident, an air bag could inflate and cause serious injuries or even death to the child seated in the rear-facing child-restraint system. Always make sure the passenger air bag deactivation indicator light is illuminated using the key to turn the passenger air bag off.

Refer to Passenger Air Bag Deactivation Switch on page 2-43.
Refer to Passenger seat weight sensors on page 2-47.

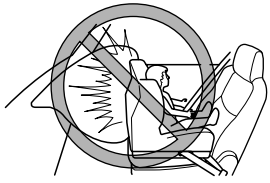

Seating a child in a child-restraint system on the passenger seat is dangerous under certain conditions:

This vehicle is equipped with both a passenger seat weight sensor and a passenger air bag deactivation indicator light (page 2-47). Even with the passenger seat weight sensors, seating a child in a child-restraint system on the passenger seat under the following conditions increases the danger of the passenger air bag deploying and could result in serious injury or death to the child. These are among the reasons why the passenger air bag should be turned off using the key.

- *The passenger air bag deactivation indicator light does not illuminate when seating a child in the child-restraint system.*
- *Luggage or other items are placed on the seat with the child in the child-restraint system.*
- *The seat is washed.*
- *Liquids are spilled on the seat.*
- *The passenger seat is moved backward, and it is pushed into luggage or other items placed behind it.*
- *Luggage or other items are placed between the passenger seat and center console.*
- *Any accessories, which might increase the total seated weight on the passenger seat, are attached to the passenger seat.*

Before installing child-restraint system on the passenger seat, move the passenger seat as far back as possible:

In a collision, the force of a deploying air bag could cause serious injury or death to the child. Make sure that the passenger air bag deactivation switch is in the OFF position. Refer to Passenger Air Bag Deactivation Switch (page 2-43).

Do not allow a child to lean over or against the side window of a vehicle with side air bags:

Allowing anyone to lean over or against the door is dangerous. If the vehicle is equipped with side air bags, the impact of an inflating side air bag could cause serious injury or death to the person. Children are more likely to sleep in the vehicle; when they do, they are more at risk in the passenger's seat that has a side air bag because they may slump over into the path of the seatback-mounted air bag. Furthermore, leaning over or against the doors could block the side air bag and eliminate the advantages of supplemental protection. Because the side air bag deploys from the outboard shoulder of the seat, do not allow the child to lean over or against the side window, even if the child is seated in a child-restraint system.

Never use one seat belt on more than one person at a time:

Using one seat belt for more than one person at a time is dangerous. A seat belt used in this way cannot spread the impact forces properly and the two passengers could be crushed together and seriously injured or even killed. Never use one belt for more than one person at a time and always operate the vehicle with each occupant properly restrained.

Always use a child-restraint system designed for use without a tether:

Using a child-restraint system that requires a tether is dangerous. Your Mazda does not have a child-restraint tether. The child-restraint system cannot be properly secured. In a collision, it could move and injure other occupants as well as result in serious injuries or death to the child.

⚠ CAUTION

A seat belt or child-restraint system can become very hot when exposed to direct sunlight during warm weather. To avoid burning yourself or a child, check them before you or your child touches them.

NOTE

Your Mazda is equipped with LATCH lower anchors for attachment of specially designed LATCH child-restraint systems behind the passenger seat that slide through the passenger seat when it is in the fully rearward position. When using these anchors to secure a child-restraint system, refer to *"LATCH Child-Restraint Systems" (page 2-27).*

Child-Restraint System Installation Position

In this owner's manual, explanation of child-restraint systems is provided for the following three types of popular child-restraint systems: infant seat, child seat, booster seat.

NOTE

- *Installation position is determined by the type of child-restraint system. Always read the manufacturer's instructions and this owner's manual carefully.*
- *Due to variations in the design of child-restraint systems, vehicle seats and seat belts, all child-restraint systems may not fit all seating positions. Before purchasing a child-restraint system, it should be tested in the specific vehicle seating position (or positions) where it is intended to be used. If a previously purchased child-restraint system does not fit, you may need to purchase a different one that will.*

Infant seat

An infant seat provides restraint by bracing the infant's head, neck and back against the seating surface.

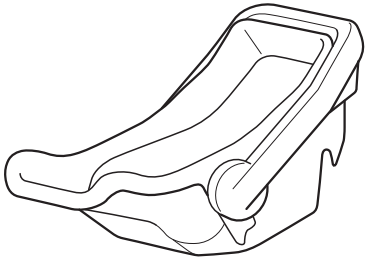

Child seat

A child seat restrains a child's body using the harness.

Booster seat

A booster seat is a child restraint accessory designed to improve the fit of the seat belt system around the child's body.

Installing a Child-Restraint System

The passenger lap/shoulder belt can easily be converted into the automatic locking mode, which must be done to hold the child-restraint system.
Some child-restraint systems also employ specially designed LATCH attachments; refer to “LATCH Child-Restraint Systems” (page 2-27).
Follow these manufacturer's instructions when installing a child-restraint system on the passenger's seat, unless you are attaching a LATCH-equipped child-restraint system to the LATCH lower anchors. Refer to “LATCH Child-Restraint Systems” (page 2-27).

NOTE
Follow the child-restraint system manufacturer's instructions carefully. If you are not sure whether you have a LATCH system, check in the child-restraint system manufacturer's instructions and follow them accordingly. Depending on the type of child-restraint system, it may not employ seat belts which are in automatic locking mode, however if it uses an upper tether, it may not be mounted properly in this vehicle as there is no safe way to anchor the tether. Confirm whether the child-restraint system can be used with seat belts by reading the child-restraint system manufacturer's instructions.

Before installing a child-restraint system, make sure the passenger air bag deactivation indicator light illuminated by using the key to turn the passenger air bag off.
Refer to Passenger seat weight sensors on page 2-47.
Refer to Passenger Air Bag Deactivation Switch on page 2-43.

1. Make sure to remove articles from behind the passenger seat that would prevent the seat from sliding back fully, and then slide the seat as far back as possible.

2. Secure the child-restraint system with the lap portion of the lap/shoulder belt. See the instructions on the child-restraint system for belt routing instructions.
3. To get the retractor into the automatic locking mode, pull the shoulder belt portion of the seat belt until the entire length of the belt is out of the retractor.

4. Push the child-restraint system firmly into the vehicle seat. Be sure the belt retracts as snugly as possible. Clicking from the retractor will be heard during retraction if the system is in automatic locking mode. If the belt does not lock the seat down tight, repeat this step.
5. Make sure the passenger air bag deactivation indicator light illuminates by using the key to turn the passenger air bag off after installing a child-restraint system on the passenger seat.

WARNING

Always make sure the passenger air bag deactivation indicator light is illuminated when using a rear-facing child-restraint system:

Seating a child in a rear-facing child-restraint system that is installed on the passenger seat with the passenger air bag deactivation indicator light not illuminated is extremely dangerous. In an accident, an air bag could inflate and cause serious injuries or even death to the child seated in the rear-facing child-restraint system. Always make sure the passenger air bag deactivation indicator light is illuminated using the key to turn the passenger air bag off.

Refer to Passenger seat weight sensors on page 2-47.
Refer to Passenger Air Bag Deactivation Switch on page 2-43.

NOTE

- *Inspect this function before each use of the child-restraint system. You should not be able to pull the shoulder belt out of the retractor while the system is in the automatic locking mode. When you remove the child-restraint system, be sure the belt fully retracts to return the system to emergency locking mode before occupants use the seat belts.*
- *Follow the child-restraint system manufacturer's instructions carefully. Depending on the type of child-restraint system, it may not employ seat belts which are in automatic locking mode, however if it uses an upper tether, it may not be mounted properly in this vehicle as there is no safe way to anchor the tether. Confirm whether the child-restraint system can be used with seat belts by reading the child-restraint system manufacturer's instructions.*

LATCH Child-Restraint System

Your Mazda is equipped with LATCH lower anchors for attachment of specially designed LATCH child-restraint systems behind the passenger seat that slide through the passenger seat when it is in the fully rearward position. Only LATCH junior seats and infant carriers without upper tethers can be used in this position, as there is no good place to anchor the tether due to this vehicle's design. Both anchors must be used when installing these lower anchor only child-restraint systems, otherwise the seat will bounce around and put the child in danger.

WARNING

Follow the manufacturer's instructions for the use of the child-restraint system:

An unsecured child-restraint system is dangerous. In a sudden stop or a collision it could move causing serious injury or death to the child or other occupants. Make sure any child-restraint system does not rely on an upper tether and then properly secure those non-tethered seats according to the child-restraint system manufacturer's instructions.

Make sure the child-restraint system is properly secured:

An unsecured child-restraint system is dangerous. In a sudden stop or a collision it could move causing serious injury or death to the child or other occupants. Follow the child-restraint system manufacturer's instructions on belt routing to secure the seat just as you would with a child in it so that nobody is tempted to put a child in an improperly secured seat later on. When not in use, remove it from the vehicle or fasten it with a seat belt, or latch it down to BOTH LATCH lower anchors for LATCH child-restraint systems.

Make sure there are no seat belts or foreign objects near or around the LATCH child-restraint system:

Not following the child-restraint system manufacturer's instructions when installing the child-restraint system is dangerous. If seat belts or a foreign object prevent the child-restraint system from being securely attached to the LATCH lower anchors and the child-restraint system is installed improperly, the child-restraint system could move in a sudden stop or collision causing serious injury or death to the child or other occupants. When installing the child-restraint system, make sure there are no seat belts or foreign objects near or around the LATCH lower anchors. Always follow the child-restraint system manufacturer's instructions.

▼LATCH Child-Restraint System Installation Procedure

Before installing a child-restraint system, make sure the passenger air bag deactivation indicator light illuminated by using the key to turn the passenger air bag off.
Refer to Passenger seat weight sensors on page 2-47.
Refer to Passenger Air Bag Deactivation Switch on page 2-43.

1. Make sure to remove articles from behind the passenger seat that would prevent the seat from sliding back fully, and then slide the seat as far back as possible to insert the LATCH lower anchors between the seat bottom and the seatback.
2. Expand the area between the seat bottom and the seatback slightly to verify the locations of the LATCH lower anchors.

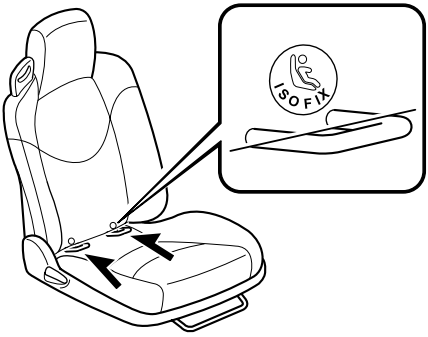

NOTE
The markings above the LATCH lower anchors indicate the locations of the LATCH lower anchors for the attachment of a child-restraint system.

3. Secure the child-restraint system using BOTH LATCH lower anchors, following the child-restraint system manufacturer's instruction, however if it uses an upper tether, it may not be mounted properly in this vehicle as there is no safe way to anchor the tether. Confirm whether the child-restraint system can be used with seat belts by reading the child-restraint system manufacturer's instructions.
4. Make sure the passenger air bag deactivation indicator light illuminates by using the key to turn the passenger air bag off after installing a child-restraint system on the passenger seat.

WARNING

Always make sure the passenger air bag deactivation indicator light is illuminated when using a rear-facing child-restraint system:

Seating a child in a rear-facing child-restraint system that is installed on the passenger seat with the passenger air bag deactivation indicator light not illuminated is extremely dangerous. In an accident, an air bag could inflate and cause serious injuries or even death to the child seated in the rear-facing child-restraint system. Always make sure the passenger air bag deactivation indicator light is illuminated using the key to turn the passenger air bag off.

Refer to Passenger seat weight sensors on page 2-47.
Refer to Passenger Air Bag Deactivation Switch on page 2-43.

Supplemental Restraint System (SRS) Precautions

The front and side supplemental restraint systems (SRS) include up to 4 air bags. **Please verify the air bags equipped on your vehicle by locating the "SRS AIRBAG" location indicators.** These indicators are visible in the area where the air bags are installed.
The air bags are installed in the following locations:

- The steering wheel hub (driver air bag)
- The passenger dashboard (passenger air bag)
- The outboard sides of the seatbacks (side air bags)*

The air bag supplemental restraint systems are designed to provide supplemental protection in certain situations, so seat belts are always important in the following ways:

Without seat belt usage, the air bags cannot provide adequate protection during an accident. Seat belt usage is necessary to:
- Keep the occupant from being thrown into an inflating air bag.
- Reduce the possibility of injuries during an accident that is not designed for air bag inflation, such as roll-over or rear impact.
- Reduce the possibility of injuries in frontal, near frontal, side collisions that are not severe enough to activate the air bags.
- Reduce the possibility of being thrown from your vehicle.
- Reduce the possibility of injuries to lower body and legs during an accident because the air bags provide no protection to these parts of the body.
- Hold the driver in a position which allows better control of the vehicle.

For some models, a passenger air bag deactivation switch is provided. This switch should be used to deactivate the passenger front and side air bags and also the passenger seat belt pretensioner system if a child-restraint system is installed on the passenger seat. Make sure the passenger air bag deactivation switch is in the ON position except when a child-restraint system is installed on the passenger seat. Refer to Passenger Air Bag Deactivation Switch on page 2-43.

 *Some models.

If your vehicle is also equipped with a driver and passenger occupant classification system, refer to the Driver and Passenger Occupant Classification System (page 2-47) for details.
If your vehicle is equipped with a driver and passenger occupant classification system, the passenger air bag deactivation indicator light illuminates for a specified time after the ignition is switched ON.

To reduce the chance of injuries caused by the deployment of the passenger air bag in the unlikely event of an accident, there are two methods to deactivate the passenger air bag as follows, however, the surest way to prevent the passenger air bag from deploying is to use the ignition key to turn it off rather than rely on the passenger seat weight sensors, which will also detect other loads or objects on and around the passenger seat.
Small children must be protected by a child-restraint system as stipulated by law in every state and province. In certain states and provinces, larger children must use a child-restraint system (page 2-18).

Carefully consider which child-restraint system is necessary for your child and follow the installation directions in this Owner's Manual as well as the child-restraint system manufacturer's instructions.
Do not use a child-restraint system which employs an upper tether because there is no appropriate means to anchor the tether.

⚠ WARNING

Seat belts must be worn in air bag equipped vehicles:

Depending only on the air bags for protection during an accident is dangerous. Alone, air bags may not prevent serious injuries. The appropriate air bags can be expected to inflate only in the first accident, such as frontal, near frontal, side collisions that are at least moderate. Vehicle occupants should always wear seat belts.

Always make sure the passenger air bag deactivation indicator light is illuminated when using a rear-facing child-restraint system:

Seating a child in a rear-facing child-restraint system that is installed on the passenger seat with the passenger air bag deactivation indicator light not illuminated is extremely dangerous. In an accident, a air bag could inflate and cause serious injuries or even death to the child seated in the rear-facing child-restraint system. Always make sure the passenger air bag deactivation indicator light is illuminated using the key to turn the passenger air bag off.
Refer to Passenger Air Bag Deactivation Switch on page 2-43.
Refer to Passenger seat weight sensors on page 2-47.

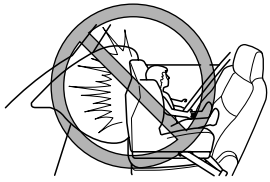

Do not sit too close to the driver and passenger air bags:

Sitting too close to the driver and passenger air bag modules or placing hands or feet on them is extremely dangerous. The driver and passenger air bags inflate with great force and speed. Serious injuries could occur if someone is too close. The driver should always hold onto only the rim of the steering wheel. The seat passenger should keep both feet on the floor. Seat occupants should adjust their seats as far back as possible and always sit upright against the seatbacks with seat belts worn properly.

Do not sit too close to a door or lean against doors in vehicles with side air bags:

Sitting too close to the side air bag modules or placing hands on them is extremely dangerous. A side air bag inflates with great force and speed directly out of the outboard shoulder of the seat and expands along the door on the side the car is hit. Serious injury could occur if someone is sitting too close to the door or leaning against a window in the seats. Furthermore, sleeping up against the door or hanging out the driver-side window while driving could block the side air bag and eliminate the advantages of supplemental protection. Give the side air bags room to work by sitting in the center of the seat while the vehicle is moving with seat belts worn properly.

Do not attach objects on or around the area where driver and passenger air bags deploy:

Attaching an object to the driver and passenger air bag modules or placing something in front of them is dangerous. In an accident, an object could interfere with air bag inflation and injure the occupants.

Do not attach objects on or around the area where a side air bag deploys:
Attaching objects to the seat in such a way as to cover the outboard side of the seat in any way is dangerous. In an accident the object could interfere with the side air bag, which inflates from the outboard side of the seats, impeding the added protection of the side air bag system or redirecting the air bag in a way that is dangerous. Furthermore, the bag could be cut open releasing the gas.
Never use seat covers on the seats. Always keep the side air bag modules in your seats free to deploy in the event of a side collision.

Do not place luggage or other objects under the seats:
Placing luggage or other objects under the seats is dangerous. The components essential to the supplemental restraint system could be damaged, and in the event of a side collision, the appropriate air bags may not deploy, which could result in death or serious injury. To prevent damage to the components essential to the supplemental restraint system, do not place luggage or other objects under the seats.

Do not touch the components of the supplemental restraint system after the air bags have inflated:
Touching the components of the supplemental restraint system after the air bags have inflated is dangerous. Immediately after inflation, they are very hot. You could get burned.

Never install any front-end equipment to your vehicle:
Installation of front-end equipment, such as frontal protection bar (kangaroo bar, bull bar, push bar, or other similar devices), snowplow, or winches, is dangerous. The air bag crash sensor system could be affected. This could cause air bags to inflate unexpectedly, or it could prevent the air bags from inflating during an accident. Occupants could be seriously injured.

Do not modify the suspension:
Modifying the vehicle suspension is dangerous. If the vehicle's height or the suspension is modified, the vehicle will be unable to accurately detect a collision resulting in incorrect or unexpected air bag deployment and the possibility of serious injuries.

Do not modify the supplemental restraint system:

Modifying the components or wiring of the supplemental restraint system is dangerous. You could accidentally activate it or make it inoperable. Do not make any modifications to the supplemental restraint system. This includes installing trim, badges, or anything else over the air bag modules. It also includes installing extra electrical equipment on or near system components or wiring. An Authorized Mazda Dealer can provide the special care needed in the removal and installation of seats. It is important to protect the air bag wiring and connections to assure that the bags do not accidentally deploy, the driver seat slide position sensor and passenger seat weight sensors are not damaged and that the seats retain an undamaged air bag connection.

NOTE

- *When an air bag deploys, a loud inflation noise can be heard and some smoke will be released. Neither is likely to cause injury, however, the texture of the air bags may cause light skin injuries on body parts not covered with clothing through friction.*
- *Should you sell your Mazda, we urge you to tell the new owner of its air bag systems and that familiarization with all instructions about them, from the Owner's Manual, is important.*

Supplemental Restraint System Components

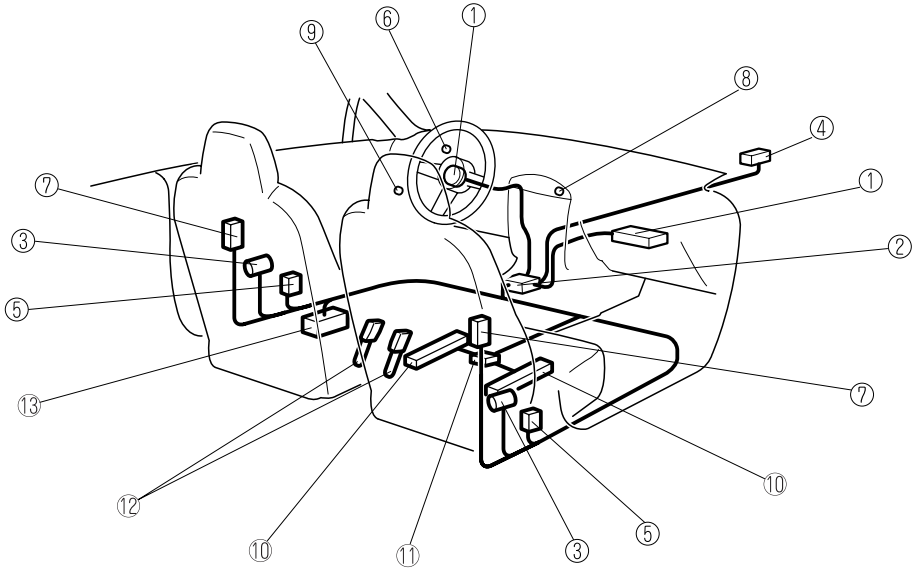

① Driver/Passenger inflators and air bags
② Crash sensor, and diagnostic module (SAS unit)
③ Seat belt pretensioner and load limiting systems (page 2-13)
④ Front air bag sensor
⑤ Side crash sensors*
⑥ Air bag/seat belt pretensioner system warning light (page 2-38)
⑦ Side inflators and air bags*
⑧ Passenger air bag deactivation indicator light (page 2-47)
⑨ Passenger air bag deactivation switch (page 2-43)
⑩ Passenger seat weight sensors (page 2-47)
⑪ Passenger seat weight sensor control module
⑫ Driver and passenger seat belt buckle switches (page 2-50)
⑬ Driver seat slide position sensor (page 2-47)

*Some models.

How the SRS Air Bags Work

Your Mazda is equipped with the following types of SRS air bags. SRS air bags are designed to work together with the seat belts to help to reduce injuries during an accident. The SRS air bags are designed to provide further protection for passengers in addition to the seat belt functions. Be sure to wear seat belts properly.

▼Seat Belt Pretensioners

The seat belt pretensioners are designed to deploy in moderate or severe frontal, near frontal collisions.

▼Driver Air Bag

The driver's air bag is mounted in the steering wheel.
When air bag crash sensors detect a frontal impact of greater than moderate force, the driver's air bag inflates quickly helping to reduce injury mainly to the driver's head or chest caused by directly hitting the steering wheel.
For more details about air bag deployment, refer to “SRS Air Bag Deployment Criteria” (page 2-40).
The driver's dual-stage air bag controls air bag inflation in two energy stages. During an impact of moderate severity the driver's air bag deploys with lesser energy, whereas during more severe impacts, it deploys with more energy.

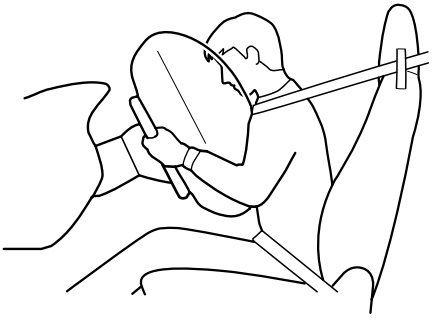

▼Passenger Air Bag

The passenger air bag is mounted in the passenger dashboard.
The inflation mechanism for the passenger air bag is the same as the driver's air bag, as mentioned above.
For more details about air bag deployment, refer to “SRS Air Bag Deployment Criteria” (page 2-40).
In addition, the passenger air bag is designed to only deploy in accordance with the total seated weight on the passenger seat. For details, refer to the driver and passenger occupant classification system (page 2-47).

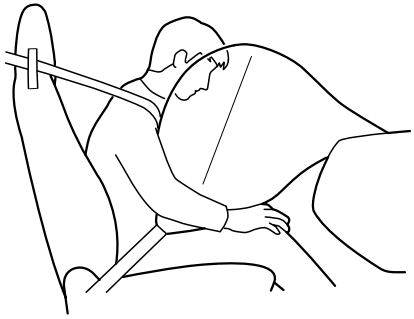

▼Side Air Bags*

The side air bags are mounted in the outboard sides of the front seatbacks.
When the air bag crash sensors detect a side impact of greater than moderate force, the system inflates the side air bag only on the side in which the vehicle was hit. The side air bag inflates quickly to reduce injury to the driver or front passenger's chest caused by directly hitting interior parts such as a door or window.
For more details about air bag deployment, refer to “SRS Air Bag Deployment Criteria” (page 2-40).
In addition, the front passenger side air bag is designed to only deploy in accordance with the total seated weight on the front passenger seat. For details, refer to the driver and front passenger occupant classification system (page 2-47).

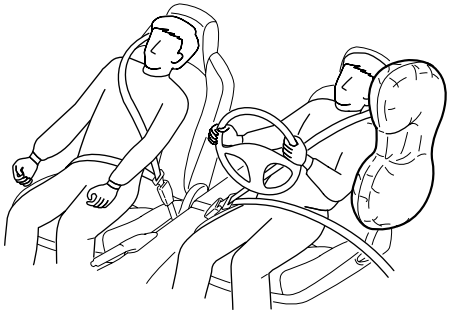

▼Air Bag/Seat Belt Pretensioner System Warning Light

If the air bag/seat belt pretensioner system is working properly, the warning light illuminates when the ignition is switched ON or after the engine is cranked. The warning light turns off after a specified period of time.

A system malfunction is indicated if the warning light constantly flashes, constantly illuminates or does not illuminate at all when the ignition is switched ON. If any of these occur, consult an Authorized Mazda Dealer as soon as possible. The system may not work in an accident.

 *Some models.

WARNING

Never tamper with the air bag/pretensioner systems and always have an Authorized Mazda Dealer perform all servicing and repairs:

Self-servicing or tampering with the systems is dangerous. An air bag/pretensioner could accidentally activate or become disabled causing serious injury or death.

SRS Air Bag Deployment Criteria

This chart indicates the applicable SRS equipment that will deploy depending on the type of collision.
(The illustrations are the representative cases of collisions.)

SRS equipment	Types of collision		
	A severe frontal/near frontal collision	A severe side collision	A rear collision
	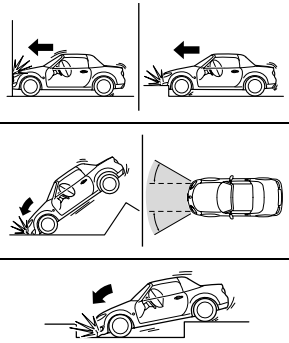	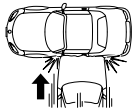	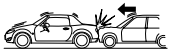
Seat belt pretensioner	X*1 (both sides)		No air bag and front seat belt pretensioner will be activated in a rear collision.
Driver air bag	X		
Passenger air bag	X*1		
Side air bag*		X*1 (impact side only)	

X: The SRS air bag equipment is designed to deploy in a collision.
*1: The passenger front and side air bags and the seat belt pretensioner are designed to deploy depending on the condition of the total seated weight on the passenger seat or the status of the passenger air bag deactivation switch.

 *Some models.

Limitations to SRS Air Bag

In severe collisions such as those described previously in “SRS Air Bag Deployment Criteria”, the applicable SRS air bag equipment will deploy. However, in some accidents, the equipment may not deploy depending on the type of collision and its severity.

Limitations to front/near front collision detection:
The following illustrations are examples of front/near front collisions that may not be detected as severe enough to deploy the SRS air bag equipment.

Impacts involving trees or poles

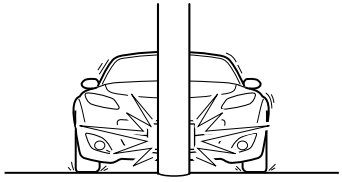

Frontal offset impact to the vehicle

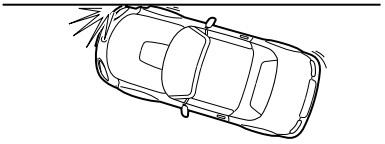

Rear-ending or running under a truck’s tail gate

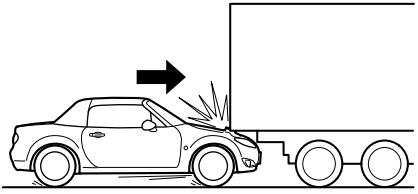

Limitations to side collision detection:
The following illustrations are examples of side collisions that may not be detected as severe enough to deploy the SRS air bag equipment.

Side impacts involving trees or poles

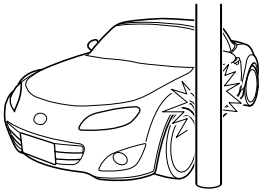

Side impacts with two-wheeled vehicles

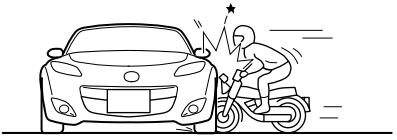

Roll-over

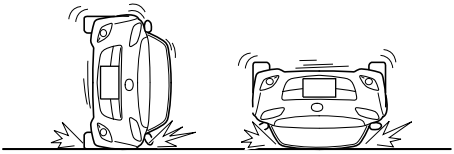

Passenger Air Bag Deactivation Switch

WARNING

Do not deactivate the passenger air bag unnecessarily:

Unnecessary deactivation of the passenger air bag is dangerous. If turned off unnecessarily, the passenger will not receive the added protection of the air bag. Serious injuries or even death could occur. With the exception of passengers fitting the categories described below, do not turn the air bag deactivation switch to the OFF position.

Your vehicle is equipped with a passenger air bag deactivation switch. The switch is located in the position shown in the figure below. The switch must be used to deactivate the passenger front and side air bags and also the passenger seat belt pretensioner system when the occupant of the passenger seat fits into one of the following categories (as described in the request form for the passenger air bag deactivation switch, the appendix B to part 595 of National Highway Traffic Safety Administration [NHTSA]):

- Infants (less than one year old; for all types of restraint, but particularly the rear-facing child restraint.)
- Children aged 1 to 12
- People with certain medical conditions which, according to his/her physician, could be adversely affected by air-bag activation

For more government release information on air bag deactivation, contact an Authorized Mazda Dealer for the occupant categories as described in the request form for the air bag deactivation switch in the NHTSA rules.
The air bag deactivation switch turns off the passenger front and side air bags and the also seat belt pretensioner system. Make sure the passenger air bag deactivation switch is in the ON position except when a passenger fitting the previous categories occupies the front passenger seat.

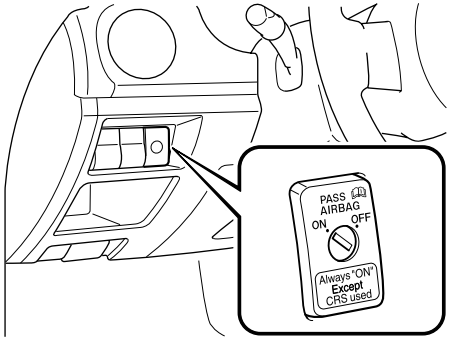

Passenger Air Bag Deactivation Switch	Passenger Air Bag Deactivation Indicator Light	Passenger Front and Side Air Bag Operation	Passenger Seat Belt Pretensioner System
OFF position	On	Deactivate	Deactivate
ON position	Off	Ready	Ready

When the ignition is switched ON the passenger air bag deactivation indicator light comes on for a specified period of time.
If the passenger air bag deactivation switch is in the OFF position, the indicator light remains on to warn that the passenger front and side air bags and also the seat belt pretensioner system have been deactivated.
In addition to using the key to deactivate the passenger front and side air bags and the also seat belt pretensioner system, the passenger front and side air bags and the also seat belt pretensioner system is also deactivated and the passenger air bag deactivation indicator light is illuminated automatically.

NOTE

Have the passenger air bag deactivation switch inspected by an Authorized Mazda Dealer if any of these conditions occur:

- *The passenger air bag deactivation indicator light does not illuminate for a specified period of time when the ignition is switched ON.*
- *The passenger air bag deactivation indicator light does not remain on when the ignition is switched ON and the passenger air bag deactivation switch is in the OFF position.*
- *The passenger air bag deactivation indicator remains on when the ignition is switched ON and the passenger air bag deactivation switch is in the ON position.*

▼To Deactivate the Passenger Air Bag

Before driving, always confirm that the passenger air bag deactivation switch is in the appropriate position according to your requirements.

⚠ WARNING

Do not leave the key in the front passenger air bag deactivation switch:

(With advanced key)

Unintentional deactivation of the passenger air bag is dangerous. In an accident, the passenger will not be properly protected. Serious injuries or even death could occur. To avoid unintentional deactivation, always use the auxiliary key stored in the advanced key currently being used to operate the passenger air bag deactivation switch. After deactivating the air bag, put the auxiliary key back into the advanced key. That way you will not leave the key in the passenger air bag deactivation switch.

(Without advanced key)

Unintentional deactivation of the passenger air bag is dangerous. In an accident, the passenger will not be properly protected. Serious injuries or even death could occur. To avoid unintentional deactivation, always use the same key to operate the passenger air bag deactivation switch and the ignition switch, that way you will not leave the key in the passenger air bag deactivation switch.

1. Insert the key into the passenger air bag deactivation switch and turn the key clockwise until the key points to OFF.

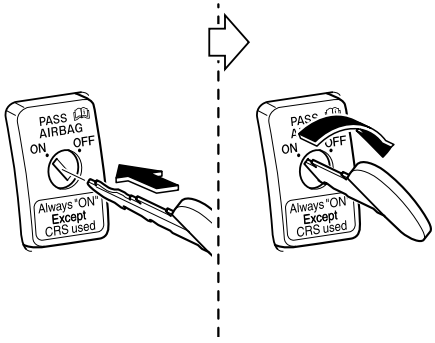

2. Remove the key.
3. Make sure the air bag deactivation indicator light remains illuminated when the ignition is switched ON.

NOTE

(With advanced key)

After operating the passenger air bag deactivation switch, put the auxiliary key back into the advanced key.

The passenger front and side air bags and also the seat belt pretensioner system will remain deactivated until the passenger air bag deactivation switch is turned to the ON position.

▼To Ready the Passenger Air Bag

Before driving, always confirm that the passenger air bag deactivation switch is in the appropriate position according to your requirements.

1. Insert the key into the passenger air bag deactivation switch and turn the key counterclockwise until the key points to ON.

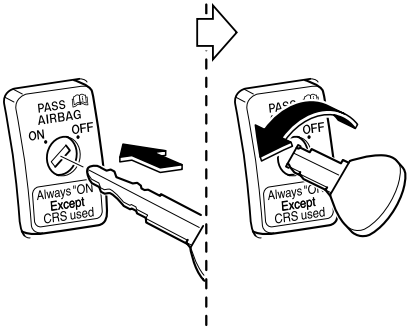

2. Remove the key.
3. Make sure the air bag deactivation indicator light turns off after the ignition is switched ON.

NOTE
(With advanced key)
After operating the passenger air bag deactivation switch, put the auxiliary key back into the advanced key.

Driver and Passenger Occupant Classification System

First, please read “Supplemental Restraint System (SRS) Precautions” (page 2-30) carefully.

▼Driver Seat Slide Position Sensor

Your vehicle is equipped with a driver seat slide position sensor as a part of the supplemental restraint system. The sensor is located under the driver seat. The sensor determines whether the driver seat is fore or aft of a reference position and sends the seat position to the diagnostic module (SAS unit). The SAS unit is designed to control the deployment of the driver air bag depending on how close the driver seat is to the steering wheel.
The air bag/seat belt pretensioner system warning light flashes if the sensor has a possible malfunction (page 2-38).

▼Passenger Seat Weight Sensors

Your vehicle is equipped with a passenger seat weight sensors as a part of the supplemental restraint system. These sensors are located under both of the passenger seat rails. These sensors determine the total seated weight on the passenger seat and monitor the seat belt buckle for the passenger seat. The SAS unit is designed to prevent the passenger front and side air bags and seat belt pretensioner system from deploying if the passenger air bag deactivation indicator light illuminates.
To reduce the chance of injuries caused by deployment of the passenger air bag, the system deactivates the passenger front and side air bags and also the seat belt pretensioner system when the passenger air bag deactivation indicator light illuminates. **Refer to the following table for the passenger air bag deactivation indicator light illumination conditions.**

This system shuts off the passenger front and side air bags and seat belt pretensioner system, so make sure the passenger air bag deactivation indicator light illuminates according to the following table.

The air bag seat belt pretensioner system warning light flashes and the passenger air bag deactivation indicator light illuminates if the sensors have a possible malfunction. If this happens, the passenger front and side air bags and seat belt pretensioner system will not deploy.

Passenger air bag deactivation indicator light

This indicator light illuminates to remind you that the passenger front and side air bags and seat belt pretensioner will not deploy during a collision.

If the passenger weight sensors are normal, the indicator light illuminates when the ignition is switched ON. The light turns off after a few seconds.

The passenger air bag deactivation indicator light illuminates or is off under the following conditions:

Condition detected by the passenger occupant classification system	Passenger air bag deactivation indicator light	Passenger front and side air bags	Passenger seat belt pretensioner system
Empty (Not occupied)*1	Off	Deactivated	Deactivated
Child or child-restraint system*2	On	Deactivated	Deactivated
Adult*3	Off	Ready	Ready

If the passenger air bag has been deactivated using the key, the passenger air bag deactivation indicator light will remain illuminated as long you leave the passenger air bag turned off, and the chart above no longer applies. Refer to Passenger air bag deactivation switch on page 2-43.

*1 : If the passenger seat belt is buckled, the passenger air bag deactivation indicator light illuminates, however this does not indicate a malfunction.

*2 : If a larger child sits on the passenger seat, the sensors might detect the child as being an adult depending on the child's physique.

*3 : If a smaller adult sits on the passenger seat, the sensors might detect the person as being a child depending on the person's physique.

If the passenger air bag deactivation indicator light does not illuminate when the ignition is switched ON and does not illuminate as indicated in the above chart, do not allow a child to sit in the passenger seat and consult an Authorized Mazda Dealer as soon as possible. The system may not work properly in an accident. You must deactivate the passenger air bag using the key (page 2-43) and consult an Authorized Mazda Dealer.

⚠ WARNING

Do not decrease the total seated weight on the passenger seat:

When an adult or large child sits on the passenger seat, decreasing the total seated weight on the passenger seat required for air bag deployment is dangerous. The passenger seat weight sensors will detect the reduced total seated weight condition and the passenger front and side air bags and seat belt pretensioner system will not deploy during an accident. The passenger will not have the supplementary protection of the air bag, which could result in serious injury. Decreasing the total seated weight on the passenger seat could result in an air bag not deploying under the following conditions, for example:

- *Luggage or other items placed under the passenger seat or between the passenger seat and center console that push up the passenger seat bottom.*
- *The passenger seat occupant sits in a manner such that the occupant's entire weight is not placed on the seat sitting too close to the door.*
- *Any accessories which might decrease the total seated weight on the passenger seat are attached to the passenger seat.*

The passenger front and side air bags and seat belt pretensioner systems will deactivate if the passenger air bag deactivation indicator light illuminates.

Do not increase the total seated weight on the passenger seat:

When an infant or small child sits on the passenger seat, increasing the total seated weight on the passenger seat is dangerous. The passenger seat weight sensors will detect the increased total seated weight, which could result in the unexpected deployment of the passenger front and side air bags and seat belt pretensioner system in an accident and may cause serious injury. Increasing the total seated weight on the passenger seat could result in the passenger front and side air bags and seat belt pretensioner system deployment in an accident under the following conditions, for example:

- *The passenger air bag deactivation indicator light does not illuminate when seating a child in the child-restraint system.*
- *Luggage or other items are placed on the seat with the child in the child-restraint system.*
- *The seat is washed.*
- *Liquids are spilled on the seat.*
- *The passenger seat is moved backward, and it is pushed into luggage or other items placed behind it.*
- *Luggage or other items are placed between the passenger seat and center console.*
- *Any accessories which might increase the total seated weight on the passenger seat are attached to the passenger seat.*

The passenger front and side air bags and seat belt pretensioner systems will deactivate if the passenger air bag deactivation indicator light illuminates.

⚠ CAUTION

- *To assure proper deployment of the front air bag and to prevent damage to the sensors in the seat bottoms:*
  - *Do not place sharp objects on the seat bottoms or leave heavy luggage on them.*
  - *Do not spill any liquids on the seats or under the seats.*
- *To allow the sensors to function properly, always perform the following:*
  - *Adjust the seats as far back as possible and always sit upright against the seatbacks with seat belts worn properly.*
  - *If you place your child on the passenger seat, secure the child-restraint system properly and slide the passenger seat as far back as possible.*

NOTE

- *The system requires about 10 seconds to alternate between turning the passenger front and side air bags and seat belt pretensioner system on or off.*
- *The passenger air bag deactivation indicator light may illuminate repeatedly if luggage or other items are put on the passenger seat, or if the temperature of the vehicle's interior changes suddenly.*
- *The passenger air bag deactivation indicator light may illuminate for 10 seconds if the total seated weight on the passenger seat changes.*
- *The air bag seat belt pretensioner system warning light might illuminate if the passenger seat receives a severe impact.*
- *You must deactivate the passenger air bag using the key (page 2-43) and consult an Authorized Mazda Dealer.*
- *If the passenger air bag deactivation indicator light illuminates when an adult is seated in the passenger seat, have the passenger re-adjust their posture by sitting with their feet on the floor, and then re-fastening the seat belt. If the passenger air bag deactivation indicator light still illuminates, slide the passenger seat as far back as possible.*

▼Driver and Passenger Buckle Switches

The buckle switches on the front seat belts detect whether or not the front seat belts are securely fastened and further control the deployment of the air bags.

Monitoring and Maintenance

▼Constant Monitoring

The following components of the air bag systems are monitored by a diagnostic system:

- Crash sensors, and diagnostic module (SAS unit)
- Front air bag sensor
- Air bag modules
- Side crash sensors*
- Air bag/Seat belt pretensioner system warning light
- Seat belt pretensioners
- Related wiring
- Front passenger air bag deactivation indicator light
- Front passenger air bag deactivation switch
- Driver seat slide position sensor
- Front passenger seat weight sensors
- Front passenger seat weight sensor control module

The diagnostic module continuously monitors the system's readiness. This begins when the ignition is switched ON and continues while the vehicle is being driven.

▼Maintenance

The air bag systems do not require regular maintenance. But if any of the following occurs, take your vehicle to an Authorized Mazda Dealer as soon as possible:

- The air bag system warning light flashes.
- The air bag system warning light remains illuminated.
- The air bag system warning light does not illuminate when the ignition is switched ON.
- The air bags have deployed.
- Passenger air bag deactivation indicator light does not illuminate when the ignition is switched ON or does not illuminate as indicated in the chart or when you manually deactivate the passenger air bag with the key.
  For more details about passenger air bag deactivation, refer to:
  - Passenger seat weight sensors (page 2-47)
  - Passenger air bag deactivation switch (page 2-43)

*Some models.

WARNING

Do not operate a vehicle with damaged air bag/seat belt pretensioner system components:

Expended or damaged air bag/seat belt pretensioner system components must be replaced after any collision which caused them to deploy or damage them. Only a trained Authorized Mazda Dealer can fully evaluate these systems to see that they will work in any subsequent accident. Driving with an expended or damaged air bag or pretensioner unit will not afford you the necessary protection in the event of any subsequent accident which could result in serious injury or death.

Do not remove interior air bag parts:

Removing any components such as the seats, dashboard, the steering wheel or parts on the front and rear window pillars and along the roof edge, containing air bag parts or sensors is dangerous. These parts contain essential air bag components. The air bag could accidentally activate and cause serious injuries. Always have an Authorized Mazda Dealer remove these parts.

Dispose of the air bag properly:

Improper disposal of an air bag or a vehicle with live air bags in it can be extremely dangerous. Unless all safety procedures are followed, injury can result. Ask an Authorized Mazda Dealer how to safely dispose of an air bag or how to scrap an air bag equipped vehicle.

NOTE

If it becomes necessary to have the components or wiring system for the supplementary restraint system modified to accommodate a person with certain medical conditions in accordance with a certified physician, contact an Authorized Mazda Dealer, refer to "Customer Assistance (U.S.A.)" (page 9-2).

3 Knowing Your Mazda

Explanation of basic operations and controls; opening/closing and adjustment of various parts.

Advanced Keyless Entry and Start System 3-2
Advanced Keys* 3-2
Operation Using Advanced Keyless Functions 3-7
Operation Using Advanced Key Functions 3-15
Advanced Key Suspend Function 3-18
Warning and Beep Sounds 3-19
Setting Change (Function Customization) 3-21
When Warning Indicator/Beep is Activated 3-22

Doors and Locks 3-23
Keys (without Advanced Key) 3-23
Keyless Entry System (with Retractable Type Key)* 3-24
Door Locks 3-30
Trunk Lid 3-33
Inside Trunk Release Lever 3-35
Power Windows 3-37
Fuel-Filler Lid and Cap 3-40
Hood 3-42
Convertible Top (Soft Top)* 3-43
Convertible Top (Power Retractable Hardtop)* 3-48

Security System 3-63
Immobilizer System (with Advanced Key) 3-63
Immobilizer System (without Advanced Key) 3-67
Theft-Deterrent System* 3-71

Steering Wheel and Mirrors 3-73
Steering Wheel 3-73
Mirrors 3-73

*Some models.

Advanced Keys*

The advanced keyless functions (advanced keyless entry and start system) enable the following operations while the advanced key is being carried (page 3-7).
- Locking/unlocking the doors, and opening the trunk lid, without operating the key.
- Starting the engine without operating the key.

Additional functions are available using the buttons on the advanced key.
Refer to Operation Using Advanced Key Functions on page 3-15.
- The following operations are possible using the transmitter of the keyless entry system from a distance (Lock/Unlock/Trunk/Panic button):
  - Locking/unlocking the doors.
  - Opening the trunk lid.
  - Opening the power windows*.
  - Turning on the alarm.
- Locking/unlocking the doors, opening the trunk lid, or starting the engine using the auxiliary key.

⚠ WARNING

Do not leave the key in your vehicle with children and keep them in a place where your children will not find or play with them:

Leaving children in a vehicle with the key is dangerous. This could result in someone being badly injured or even killed. Children may find these new kinds of keys to be an interesting toy to play with and could cause the power windows or other controls to operate, or even make the vehicle move.

Radio waves from the advanced key may affect medical equipment such as pacemakers:

Before using the advanced key near people who use medical equipment, ask the medical equipment manufacturer or your physician if radio waves from the advanced key will affect the equipment.

NOTE
- *The driver must carry the advanced key to ensure the system functions properly.*
- *Refer to Immobilizer System (page 3-63) for information regarding keys and engine starting.*
- ***(With theft-deterrent system)***
  Refer to Theft-Deterrent System (page 3-71) for information regarding keys and the prevention of vehicle and vehicle contents theft.

*Some models.

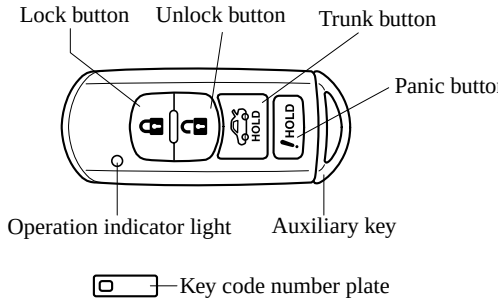

A code number is stamped on the plate attached to the key set; detach this plate and store it in a safe place (not in the vehicle) for use if you need to make a replacement key.

Also write down the code number and keep it in another safe and handy place, but not in the vehicle.

If your key is lost, consult your Authorized Mazda Dealer with the code number ready.

CAUTION

- *Because the advanced key uses low-intensity radio waves, it may not function correctly under the following conditions:*
  - *The advanced key is carried with communication devices such as cellular phones.*
  - *The advanced key contacts or is covered by a metal object.*
  - *The advanced key is near electronic devices such as personal computers or cell phones.*
  - *Non-Mazda genuine electronic equipment is installed in the vehicle.*
  - *There is equipment which discharges radio waves near the vehicle.*
  - *If the vehicle is near equipment such as wireless pay devices installed at certain gas stations.*
- *The advanced key may consume battery power excessively if it receives high-intensity radio waves. Do not place the advanced key near electronic devices such as televisions or personal computers.*
- *To avoid damage to the advanced key, DO NOT:*
  - *Drop the advanced key.*
  - *Get the advanced key wet.*
  - *Disassemble the advanced key.*
  - *Expose the advanced key to high temperatures on places such as the dashboard or hood, under direct sunlight.*
  - *Place heavy objects on the advanced key.*
  - *Put the advanced key in an ultrasonic cleaner.*
  - *Put any magnetized objects close to the advanced key.*

NOTE

- *Battery life is about one year. Be sure to replace the battery as soon as you see the green KEY indicator light in the instrument cluster begin flashing for 30 seconds after turning off the engine, otherwise, you will not be able to start the engine using the advanced keyless start system once the battery is completely dead Refer to KEY warning light (red) on page 5-51. If this occurs, you will have to either force-start the engine or use the auxiliary key Refer to Advanced Key Battery Dead Warning on page 3-20.*

- *Additional advanced keys can be obtained at an Authorized Mazda Dealer. Up to 6 advanced keys can be used with the advanced keyless functions per vehicle.*

▼Advanced Key Maintenance

⚠ CAUTION

- *Make sure the battery is installed with the correct pole facing upward. Battery leakage could occur if it is not installed correctly.*
- *When replacing the battery, be careful not to bend the electrical terminals or get oil on them. Also be careful not to get dirt in the transmitter as it could be damaged.*
- *There is the danger of explosion if the battery is not correctly replaced.*
- *Replace only with the same type battery (CR2025 or equivalent).*
- *Dispose of used batteries according to the following instructions.*
  - *Insulate the plus and minus terminals of the battery using cellophane or equivalent tape.*
  - *Never disassemble.*
  - *Never throw the battery into fire or water.*
  - *Never deform or crush.*

The following conditions indicate that the battery power is low:

- The KEY indicator light (green) flashes in the instrument cluster for about 30 seconds after the engine is turned off.
- The system does not operate and the operation indicator light on the transmitter does not flash when the buttons are pressed.
- The system's operational range is reduced.

Replacing the battery at an Authorized Mazda Dealer is recommended to prevent damage to the advanced key. If replacing the battery by yourself, follow the instruction below.

Replacing the advanced key battery

1. Pull out the auxiliary key.

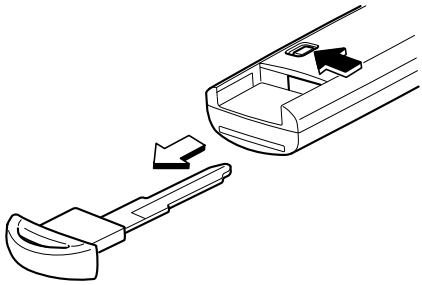

2. Insert a flathead screwdriver into the groove shown in the figure and rotate the screwdriver to open the cover slightly.

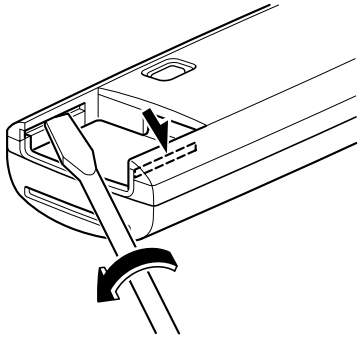

3. Insert the flathead screwdriver into the gap between the cover and the transmitter, and then rotate the screwdriver to detach the cover.

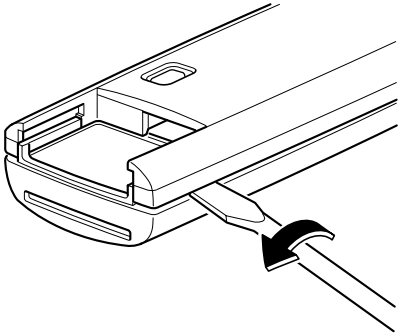

4. Remove the battery cap, then remove the battery.

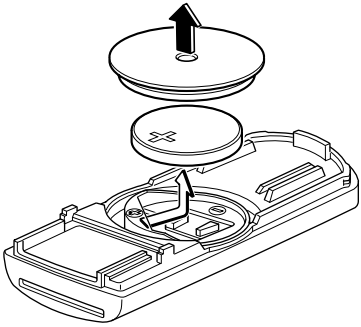

5. Insert a new battery with the positive pole facing up, and then cover the battery with the battery cap.

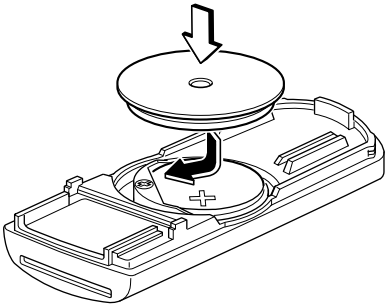

6. Close the cover.

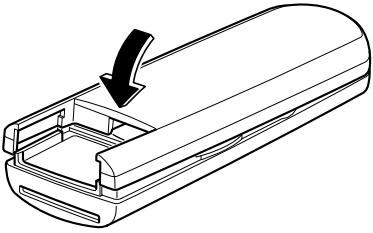

7. Reinsert the auxiliary key.

⚠ CAUTION

- *Be careful not to allow the rubber ring shown in the figure to be scratched or damaged.*
- *If the rubber ring detaches, reattach it before inserting a new battery.*

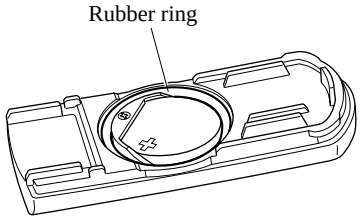

▼Service

If you have a problem with the advanced keyless functions, consult an Authorized Mazda Dealer.

If your advanced key is lost or stolen, bring all remaining advanced keys to an Authorized Mazda Dealer as soon as possible for a replacement and to make the lost or stolen advanced key inoperative.

⚠ CAUTION

Radio equipment like this is governed by laws in the United States. Changes or modifications not expressly approved by the party responsible for compliance could void the user's authority to operate the equipment.

Operation Using Advanced Keyless Functions

▼Operational Range

The system operates only when the driver is in the vehicle or within operational range while the advanced key is being carried.

NOTE
When the battery power is low, or in places where there are high-intensity radio waves or noise, the operational range may become narrower or the system may not operate.

Locking, unlocking the doors

The operational range for locking/unlocking the doors is an area of up to 80 cm (31 in) from the center of the door handles.

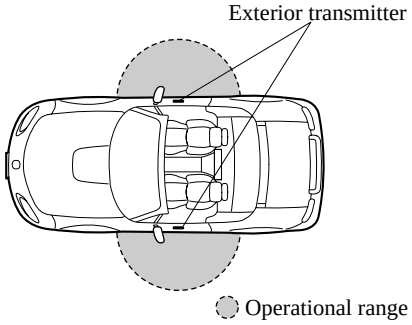

NOTE
The system may not operate if you are too close to the windows, door handles.

Opening the trunk lid

The operational range for opening the trunk lid is an area of up to 80 cm (31 in) from the center of the trunk lid.

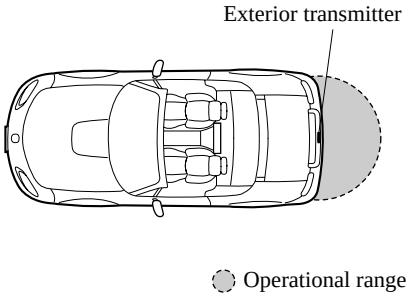

Starting the engine

The operational range for starting the engine includes nearly the entire cabin area.

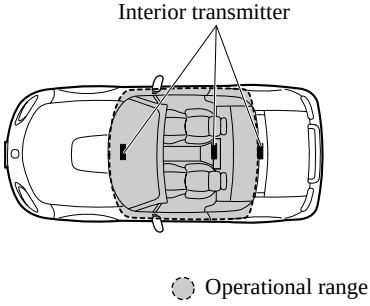

NOTE

- *The trunk is out of the operational range, however, starting the engine may be possible.*
- *The engine may not start if the advanced key is placed in the following areas:*
  - *Around the dashboard*
  - *In the storage compartments such as the glove box*
  - *On the rear parcel shelf*
- *Starting the engine may be possible even if the advanced key is outside of the vehicle and extremely close to a door and window, however, always start the engine from the driver's seat.*
  If the vehicle is started and driven away while the advanced key is not in the vehicle, the vehicle will not restart after it is turned off and the ignition is switched off.
- *If the advanced key is detected within operational range, the operation indicator light on the transmitter flashes momentarily.*

▼Locking, Unlocking the Doors with Request Switch

Both doors can be locked/unlocked by pressing the request switch on a door while the advanced key is being carried.

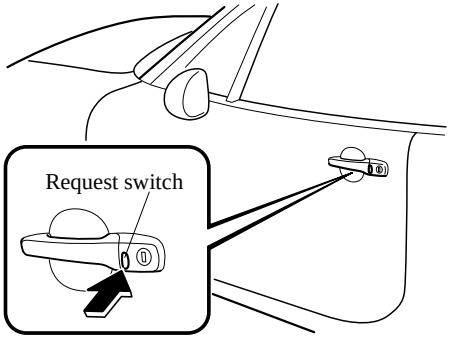

To lock

To lock the doors, press the request switch. A beep sound will be heard once and the hazard warning lights will flash once.

NOTE
(Without theft-deterrent system)
The hazard warning lights will flash once to indicate that the doors are locked.
(With theft-deterrent system)
The hazard warning lights only flash when the theft deterrent system is armed.
The hazard warning lights do not flash if both the doors are locked before the theft-deterrent system is properly armed.
Refer to the theft-deterrent system on page 3-71.

To unlock

Driver's door request switch

To unlock the driver's door, press the request switch. A beep sound will be heard twice and the hazard warning lights will flash twice.
To unlock both doors, press the request switch again within 3 seconds and two more beep sounds will be heard.

NOTE
(Without theft-deterrent system)
The hazard warning lights will flash twice to indicate that the doors are unlocked.
(With theft-deterrent system)
The hazard warning lights only flash when the theft deterrent system is turned off.
The hazard warning lights do not flash unless the theft deterrent system has been properly turned off.
Refer to the theft-deterrent system on page 3-71.

Passenger door request switch

To unlock the doors, press the request switch. A beep sound will be heard twice and the hazard warning lights will flash twice.

NOTE

- *Confirm that both doors are securely locked.*
- *Both doors cannot be locked when any door is open.*
- *A beep sound is heard for confirmation when the doors are locked/unlocked using the request switch. If you prefer, the beep sound can be turned off (page 3-21).*
- *The setting can be changed so that the doors are locked automatically without pressing the request switch (page 3-21).*
  (Auto-lock function)
  A beep sound is heard when both doors are closed while the advanced key is being carried. Both doors are locked automatically after about 3 seconds when the advanced key is out of the operational range. Also, the hazard warning lights flash once. (Even if the driver is in the operational range, both doors are locked automatically after about 30 seconds.)
  If you are out of the operational range before the doors are completely closed or another advanced key is left in the vehicle, the auto-lock function will not work.
  Always make sure that both doors are closed and locked before leaving the vehicle.
- ***(Auto re-lock function)***
  After unlocking doors by pressing the request switch, both doors will automatically lock if any of the following operations are not performed within about 30 seconds. If your vehicle has a theft-deterrent system, the hazard warning lights will flash for confirmation.
  - *A door is opened.*
  - *The auxiliary key is inserted into the ignition switch.*
  - *The start knob is pushed.*

▼Opening the Trunk Lid with Request Switch

The trunk lid can be opened by pressing the request switch on the under side of the trunk lid above the license plate while the advanced key is being carried.

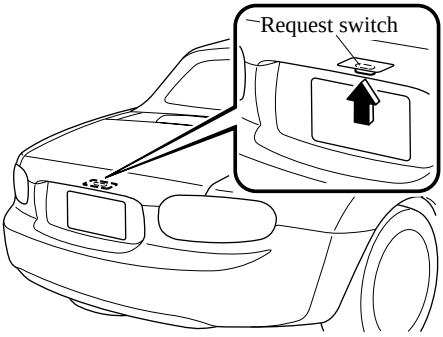

NOTE

- *If the advanced key is left in the trunk, the trunk lid will close, however, the trunk lid can be opened using the request switch and the vehicle could be stolen.*
- ***(With power retractable hardtop)***
  The trunk lid can only be opened when the power retractable hardtop is fully opened/closed. Open/close the power retractable hardtop completely before opening the trunk lid.

▼Starting the Engine

Ignition switch positions

As there is no traditional key, some of the ignition switch functions are different.

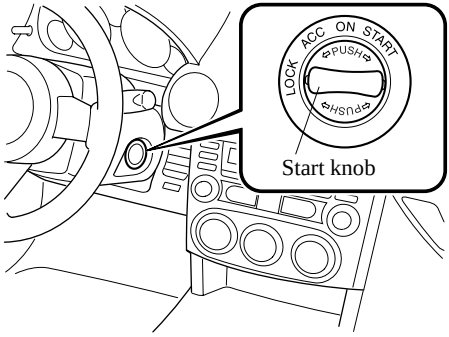

The engraved mark (LOCK) indicated in the illustration may differ from that indicated on the actual vehicle (it may read OFF).

OFF/LOCK Knob Released

The power supply to electrical devices is turned off.

OFF/LOCK Knob Depressed

The ignition can be switched to ACC when the KEY indicator light (green) illuminates in the instrument cluster.

⚠ WARNING

Before leaving the driver's seat, always switch the ignition to OFF/LOCK, set the parking brake and make sure the shift lever is in P with an automatic transmission or in 1 or R with a manual transmission:

It is important to switch the ignition to OFF/LOCK even if you are not removing the key from the ignition or leaving the vehicle. Leaving the key in other positions will disable some of the vehicle security systems and run the battery down.

Leaving the driver's seat without switching the ignition to OFF/LOCK, setting the parking brake and shifting the shift lever to P with an automatic transmission, or to 1 or R with a manual transmission is dangerous. Unexpected vehicle movement could occur. This could cause an accident.

NOTE

- *If turning the ignition switch is difficult, jiggle the steering wheel from side to side.*
- ***(Automatic transmission)***
  The ignition cannot be switched from ACC to OFF/LOCK when the shift lever is not in P.

ACC (Accessory)

In this position, some electrical accessories will operate.

NOTE

The Advanced Keyless Entry System does not function in the ACC position, and the doors will not lock/unlock using the transmitter or request switches even if the advanced key is carried away from the vehicle.

ON

This is the normal running position after the engine is started. The warning lights (except brakes) should be inspected before the engine is started (page 5-42).

NOTE

When the ignition is switched ON, the sound of the fuel pump motor operating near the fuel tank can be heard. This does not indicate an abnormality.

START

The engine is started in this position. It will crank until you release the start knob; then it returns to the ON position. The brake warning light can be checked after the engine is started (page 5-42).

Starting the engine

NOTE

- *Engine-starting is controlled by the spark ignition system.*
  This system meets all Canadian Interference-Causing Equipment Standard requirements regulating the impulse electrical field strength of radio noise.
- *The advanced key must be carried because the advanced key carries an immobilizer chip that must communicate with the engine controls at short range.*
- *When starting the engine, be sure the start knob is securely attached before trying to operate it. If the knob becomes detached from the ignition switch, re-attach it by pushing it on to the ignition switch.*

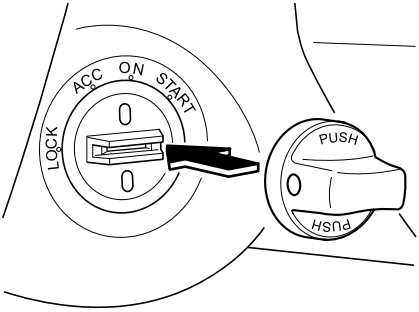

1. Make sure the advanced key is being carried.
2. Occupants should fasten their seat belts.
3. Make sure the parking brake is on.
4. Depress the brake pedal.

5. **(Manual transmission)**
   Depress the clutch pedal all the way and shift into neutral.
   Keep the clutch pedal depressed while cranking the engine.
   (Automatic transmission)
   Put the vehicle in park (P). If you must restart the engine while the vehicle is moving, shift into neutral (N).

NOTE
(Manual transmission)
*The starter will not operate if the clutch pedal is **not** depressed all the way.*
(Automatic transmission)
The starter will not operate if the shift lever is not in P or N.

6. Push the start knob slowly all the way in.

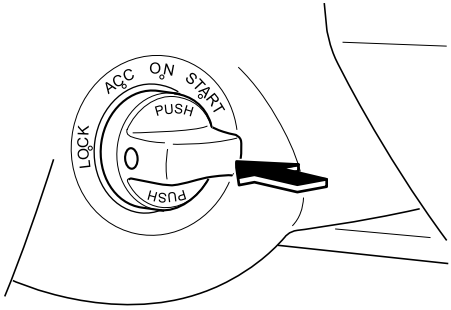

7. Verify that the KEY indicator light (green) illuminates in the instrument cluster. The KEY warning light (red) means you cannot continue to start the engine using the Advanced Keyless System. You may have to use the auxiliary key instead (page 3-22).

NOTE
In the following cases, the KEY warning light (red) illuminates and the engine will not start.
- *The advanced key battery is dead.*
- *The advanced key is out of operational range.*
- *The advanced key is placed in areas where it is difficult for the system to detect the signal (page 3-7).*
- *A key from another manufacturer similar to the advanced key is in the operational range.*

8. Switch the ignition to ACC while pushing the start knob in.

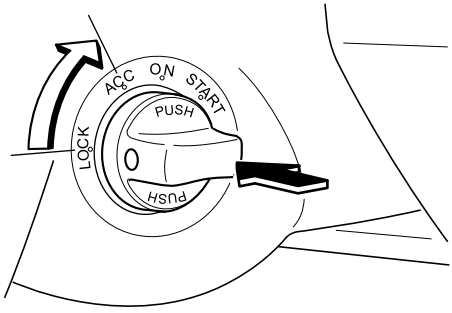

9. Switch the ignition from ACC to START and hold (up to 10 seconds at a time) until the engine starts.

⚠ CAUTION

Do not try the starter for more than 10 seconds at a time. If the engine stalls or fails to start, wait 10 seconds before trying again. Otherwise, you may damage the starter and drain the battery.

10. After starting the engine, let it idle for about 10 seconds.

NOTE

- *In extremely cold weather or after the vehicle has not been driven in several days, let the engine warm up without operating the accelerator.*
- *Whether the engine is cold or warm, it should be started without use of the accelerator.*

Turning off the engine

1. Move the shift lever to the P position (Automatic transmission).
2. Switch the ignition from ON to ACC.

NOTE

When the engine is turned off and the ignition is switched from ACC to OFF/LOCK, the KEY indicator light (green) flashes in the instrument cluster for about 30 seconds if the battery power of the advanced key is low. Replace the battery with a new one.
Refer to Battery Replacement (page 3-7).

3. Push in the start knob from the ACC position and turn it to the OFF/LOCK.

⚠ CAUTION

When leaving the vehicle, make sure the ignition is switched to OFF/LOCK.

NOTE

- *When switching the ignition to OFF/LOCK, the ignition switch has to be pushed in from the ACC position and turned. Without being pushed in, the ignition switch stops at the ACC position and the vehicle battery may be discharged if the ignition switch is left in the ACC position. When leaving the vehicle, make sure the ignition is switched to OFF/LOCK.*
- *If the vehicle is left with the ignition not switched to OFF/LOCK, a beep sound is heard and the indicator light flashes to notify the driver.*
  Refer to Warning Beep (page 3-19).

Operation Using Advanced Key Functions

▼Keyless Entry System

This system uses the more traditional keyless entry buttons to remotely lock and unlock the doors and opens the trunk lid, and opens the power windows.
It can also help you signal for attention.
Press the buttons slowly and carefully.

NOTE

- *The keyless entry system is designed to operate up to about 2.5 m (8 ft) from the center of the vehicle, but this may vary due to local conditions.*
- *The system does not operate when the auxiliary key is in the ignition switch.*
- *With the start knob installed in the OFF/LOCK position, the system is fully operational. If the ignition is not switched off or the start knob is pushed in, the system does not operate.*
- *Both doors cannot be locked by pressing the lock button while either door is open. The hazard warning lights will also not flash.*
- *(With power retractable hardtop)*
  The trunk lid cannot be operated remotely if the power retractable hardtop is not fully opened or fully closed.
- *If the transmitter does not operate when pressing a button or the operational range becomes too small, the battery may be dead. To install a new battery, refer to Maintenance (page 3-5).*

Transmitter

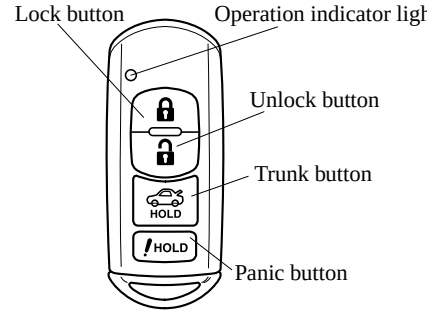

NOTE

The unlock button can be used to open the power windows. Refer to Opening the Power Windows from Outside (page 3-38).

The operation indicator light flashes when the buttons are pressed.

Lock button

To lock the doors, press the lock button. A beep sound will be heard once and the hazard warning lights will flash once.

To confirm that both doors have been locked, press the lock button again within 5 seconds. If they are closed and locked, the horn will sound.

NOTE

(Without theft-deterrent system)
The hazard warning lights will flash once to indicate that both doors are locked.
(With theft-deterrent system)
The hazard warning lights only flash when the theft deterrent system is armed.
The hazard warning lights do not flash if both the doors are locked before the theft-deterrent system is properly armed.
Refer to the theft-deterrent system on page 3-71.

NOTE
- *Both doors cannot be locked when either door is open.*
- *Confirm that both doors are locked visually or audibly by use of the double click.*

Unlock button

To unlock the driver's door, press the unlock button. A beep will be heard twice and the hazard warning lights will flash twice.

To unlock both doors, press the unlock button again within 3 seconds and two more beep sounds will be heard.

NOTE
(Without theft-deterrent system)
The hazard warning lights will flash twice to indicate that both doors are unlocked.
(With theft-deterrent system)
The hazard warning lights only flash when the theft deterrent system is turned off.
The hazard warning lights do not flash unless the theft deterrent system has been properly turned off.
Refer to the theft-deterrent system on page 3-71.

NOTE
(Auto re-lock function)
After unlocking with the transmitter, both doors will automatically lock and the hazard warning light will flash if any of the following operations are not performed within about 30 seconds. If your vehicle has a theft-deterrent system, the hazard warning lights will flash for confirmation.
- *A door is opened.*
- *The auxiliary key is inserted into the ignition switch.*
- *The start knob is pressed.*

Trunk button

To open the trunk, press the trunk button for more than 1 second.

NOTE
(With power retractable hardtop)
The trunk lid can only be opened when the power retractable hardtop is fully opened/closed. Open/close the power retractable hardtop completely before opening the trunk lid.

Panic button

If you witness from a distance someone attempting to break into or damage your vehicle, pressing the panic button will activate the vehicle's alarm.

NOTE
The panic button will work whether either door is open or closed.

(Turning on the alarm)
Pressing the panic button for 1 second or more will trigger the alarm for about 2 minutes and 30 seconds, and the following will occur:
- The horn sounds intermittently.
- The hazard warning lights flash.

NOTE
However, if the driver is too close to the vehicle the panic button may not function.

(Turning off the alarm)
The alarm stops by pressing any button on the transmitter.

Declaration of Conformity

Keyless entry system

(U.S.A)
FCC WARNING
Changes or modifications not expressly approved by the party responsible for compliance could void the user's authority to operate the equipment.
Note
*This device complies with Part 15 of the FCC Rules. Operation is subject to the following two conditions:
(1) this device may not cause harmful interference, and (2) this device must accept any interference received, including interference that may cause undesired operation.

(CANADA)
This device complies with RSS-210 of Industry CANADA. Operation is subject to the following two conditions: (1) this device may not cause interference, and (2) this device must accept any interference, including interference that may cause undesired operation of the device.

(MEXICO)
Este equipo opera a titulo secundario, consecuentemente, debe aceptar interferencias perjudiciales incluyendo equipos de la misma clase y puede no causar interferencias a sistemas operando a titulo primario

Sistema de acceso normal sin llave
Modelo : SKE125-01
Sistema de acceso normal sin llave con marcado de confirmación por radio

COFETEL RCPMAIM05-614

Sistema de arranque y de acceso avanzado sin llave
Modelo : SKE11A-04
Sistema de arranque y de acceso avanzado sin llave con marcado de confirmación por radio

COFETEL RLVMASK08-1121

UAE : 「Approved by TRA」

▼Auxiliary Key Function

Use the auxiliary key stored in the advanced key in the event of a dead transmitter battery or malfunction.

Removing the auxiliary key

Pull out the auxiliary key from the advanced key.

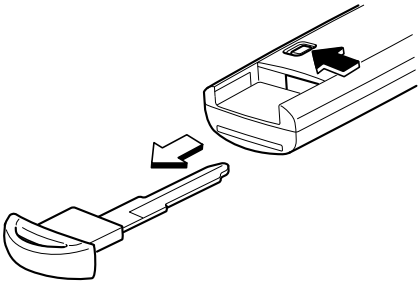

Locking, unlocking the doors

The doors can be locked/unlocked using the auxiliary key, refer to Locking, Unlocking with Key (page 3-30).

Opening the trunk lid

The trunk lid can be opened using the auxiliary key, refer to Opening and Closing the Trunk Lid (page 3-33).

⚠ CAUTION

Do not open the trunk while the power retractable hardtop is opening/closing. The power retractable hardtop and trunk lid mechanisms could be damaged.

Starting the engine

The engine can be started with the auxiliary key, refer to Ignition Switch (page 5-2).

Advanced Key Suspend Function

If one key is left in the vehicle or trunk and the second key is used to lock the vehicle, the functions of the advanced key left in the vehicle or the trunk are temporarily suspended to prevent theft of the vehicle.
The following are inoperable:

- Starting the engine using the start knob.
- Operating the request switches.

To restore these functions, perform any one of the following:

- Press the lock or unlock button on the advanced key which has had its functions suspended.
- While carrying another advanced key, push in the start knob until the KEY indicator light (green) in the instrument cluster illuminates.
- Insert the auxiliary key and switch the ignition ON.

Warning and Beep Sounds

▼System Malfunction Warning Beep

If any malfunction occurs in the advanced keyless function, the KEY warning light (red) in the instrument cluster illuminates continuously and beep sounds will be heard.

⚠ CAUTION

If the KEY warning light (red) remains illuminated, do not continue to drive the vehicle with the advanced keyless function. Park the vehicle in a safe place and use the auxiliary key to continue driving the vehicle. Have the vehicle inspected at an Authorized Mazda Dealer as soon as possible. Refer to Ignition Switch (page 5-2).

▼Start Knob Not in LOCK Warning Beep

If the start knob is in the ACC position and the driver's door is opened, a continuous beep sound will be heard to notify the driver that the start knob has not been returned to the LOCK position. In this case, the keyless entry system does not operate, the car cannot be locked, and the battery will run down.

▼Advanced Key Removed from Vehicle Warning Beep

Under the following conditions, a beep sound will be heard and the KEY warning light (red) will flash continuously when the start knob has not been returned to the LOCK position to notify the driver that the advanced key has been removed. The KEY warning light (red) will stop flashing when the advanced key is back inside the vehicle:

- The start knob has not been returned to the LOCK position, the driver's door is open, and the advanced key is removed from the vehicle. (A beep sound will be heard 3 times.)
  However the beep sound will be heard continuously when the start knob is in the ACC position and the door is open due to the activation of the warning beep sound indicating that the start knob is not in the LOCK position.
- The start knob has not been returned to the LOCK position and all the doors are closed after removing the advanced key from the vehicle. (A beep sound will be heard 6 times.)

NOTE

Because the advanced key utilizes low-intensity radio waves, the Advanced Key Removed From Vehicle Warning may activate if the advanced key is carried together with a metal object or it is placed in a poor signal reception area within the vehicle.

▼Request Switch Inoperable Warning Beep

If the request switch for a front door is pressed under the following conditions while the advanced key is being carried, a beep will be heard 6 times to indicate that the front doors cannot be locked.
- A door is open (door ajar included).
- The start knob has not been returned to the LOCK position.
- The auxiliary key is inserted into the ignition switch.

▼Advanced Key Battery Dead Warning

When the start knob is returned to the ACC or LOCK position from the ON position, the KEY indicator light (green) flashes for approximately 30 seconds indicating that the remaining battery power is low. Replace with a new battery before the advanced key becomes unusable.
Refer to Advanced Key Maintenance (page 3-5).

NOTE
The advanced key can be set so that the KEY indicator light (green) does not flash even if the battery power is low.
Refer to Setting Change (page 3-21).

▼Engine Start Not Permitted Warning

Under the following conditions, the KEY warning light (red) flashes to inform the driver that the start knob will not rotate to the ACC position even if it is pushed in from the LOCK position.
- The advanced key battery is dead.
- The advanced key is not within operational range.
- The advanced key is placed in areas where it is difficult for the system to detect the signal (page 3-7).
- A key from another manufacturer similar to the advanced key is in the operational range.

▼Advanced Key Left-in-trunk Warning Beep

If the advanced key is left in the trunk compartment with both doors locked and the trunk lid closed, a beep sound is heard for about 10 seconds to remind the driver the advanced key has been left in the trunk compartment. If this happens, open the trunk lid by pressing the request switch and remove the advanced key. An advanced key removed from the trunk may not function because its functions may have been temporarily suspended. To restore the advanced key function, perform the applicable procedure (page 3-18).

▼Advanced Key Left-in-vehicle Warning Beep

If an advanced key is left in the vehicle cabin and both doors are locked using a separate advanced key, a beep sound is heard for about 10 seconds to remind the driver that the advanced key has been left in the vehicle cabin. If this happens, the doors lock but the functions of the advanced key left in the vehicle cabin may be temporarily suspended. Perform the following procedure to restore the functions of the advanced key (page 3-18).

Setting Change (Function Customization)

The following function settings are possible. These settings can only be changed by an Authorized Mazda Dealer.

Setting	Function	At Initial Setting	After Setting Change
Advanced key battery dead indicator	KEY indicator light (green) flashes to indicate that the advanced key battery power is low.	Activated	Deactivated
Lock/unlock operation confirmation beep sound*1	A beep sound is heard to confirm that both doors or the trunk lid have been locked/unlocked.	Activated	Deactivated
Autolock function*2	When both doors are closed and the advanced key is being carried and out of operational range, both the doors automatically lock after 3 seconds. (Even if the driver is in the operational range, both doors are locked automatically after about 30 seconds.)	Deactivated	Activated

*1: When the autolock function is operating, the warning sound will be heard regardless of the setting.
*2: When the autolock function is enabled, windows will not automatically close. You must close them before leaving vehicle.

When Warning Indicator/Beep is Activated

Under the following conditions, warning beeps are heard and a warning/indicator light in the instrument cluster illuminates to notify the driver of improper operation of the advanced key to prevent theft of the vehicle (page 3-19).

Warning	What to check
When a door is open, a continuous beep sound will be heard.	Check whether the start knob has been returned to the LOCK position.
When a door is open, 3 beep sounds are heard, and the KEY warning light (red) in the instrument cluster flashes.	Check whether the advanced key has been removed from the vehicle.
When a door is closed, a beep sound is heard 6 times, and the KEY warning light (red) in the instrument cluster flashes.	Check whether the advanced key has been removed from the vehicle.
When locking the doors or closing the trunk, the chime sounds for about 10 seconds.	Check whether the advanced key has not been left in the vehicle or the trunk.
When attempting to lock the doors, a beep sound is heard.	Check whether the advanced key has been left in the vehicle.
	Check whether a door is open.
When the KEY indicator light (green) flashes in the instrument cluster.	The advanced key battery power is low. Replace the battery with a new one. Refer to Advanced Key Maintenance on page 3-5.
When the KEY warning light (red) remains illuminated in the instrument cluster.	The advanced key is malfunctioning. Park the vehicle in a safe place, and use the auxiliary key to continue driving the vehicle. Have the vehicle inspected at an Authorized Mazda Dealer as soon as possible.

Keys (without Advanced Key)

WARNING

Do not leave the key in your vehicle with children and keep them in a place where your children will not find or play with them:

Leaving children in a vehicle with the key is dangerous. This could result in someone being badly injured or even killed. Children may find these new kinds of keys to be an interesting toy to play with and could cause the power windows or other controls to operate, or even make the vehicle move.

NOTE

- *Refer to Immobilizer System (page 3-67) for information regarding keys and engine starting.*
- ***(With theft-deterrent system)***
  Refer to Theft-Deterrent System (page 3-71) for information regarding keys and the prevention of vehicle and vehicle contents theft.

The keys operate all locks.

With keyless entry system

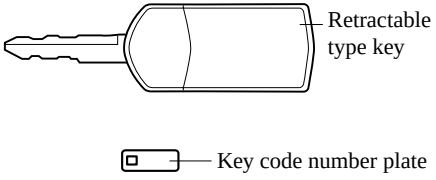

Without keyless entry system

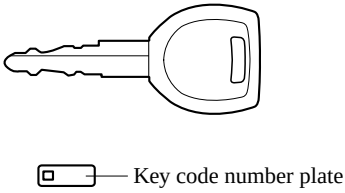

A code number is stamped on the plate attached to the key set; detach this plate and store it in a safe place (not in the vehicle) for use if you need to make a replacement key.

NOTE

- *Write down the code number and keep it in a separate, safe and convenient place, but not in the vehicle.*
  If your key is lost, consult your Authorized Mazda Dealer and have your code number ready.
- *Some types of key chains cannot be attached to the retractable type key. In this case, use the key ring provided with the transmitter which has the key code number plate attached.*

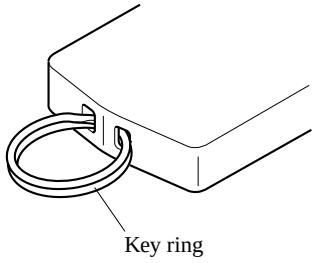

Key extend/retract method (Retractable type key)

To extend the key, press the release button.

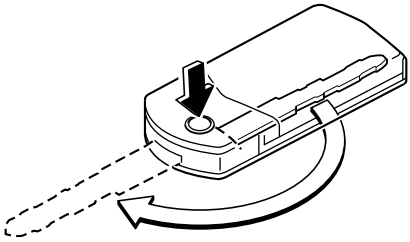

To retract the key, rotate it into the holder while pressing the release button.

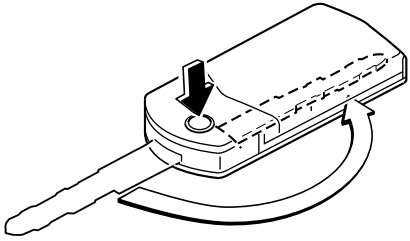

Keyless Entry System (with Retractable Type Key)*

This system remotely locks and unlocks the doors, and opens the power windows. It can also help you signal for attention. Press the buttons slowly and carefully.

⚠ CAUTION

To avoid damage to the transmitter, do not:

- *Drop the transmitter.*
- *Get the transmitter wet.*
- *Disassemble the transmitter.*
- *Expose the transmitter to any kind of magnetic field.*
- *Expose the transmitter to high temperatures on places such as the dashboard or hood, under direct sunlight.*

NOTE

- *The keyless entry system is designed to operate up to about 2.5 m (8 ft) from the center of the vehicle, but this may vary due to local conditions.*
- *The system does not operate when the key is in the ignition switch.*
- *If the transmitter does not operate when pressing a button or the operation range becomes too small, the battery may be dead. To install a new battery, refer to Maintenance (page 3-27).*
- *Additional transmitters can be obtained at an Authorized Mazda Dealer. Up to 3 transmitters can be used with the keyless entry system per vehicle. Bring all transmitters to an Authorized Mazda Dealer when additional transmitters are required.*

 *Some models.

▼Transmitter

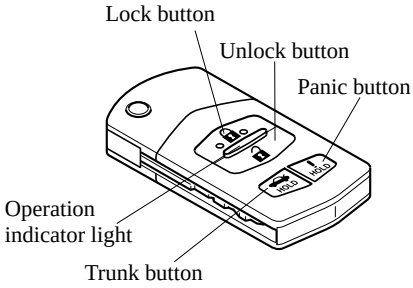

NOTE
The unlock button can be used to open the power windows. Refer to Opening the Power Windows from Outside (page 3-38).

The operation indicator light flashes when the buttons are pressed.

Lock button

To lock the doors, press the lock button.

To confirm that both doors have been locked, press the lock button again within 5 seconds. If they are closed and locked, the horn will sound.

NOTE
- *Doors can be locked by pressing the lock button while a door is open. However, the hazard warning lights will not flash and the horn will not sound.*
- ***(Without theft-deterrent system)***
  The hazard warning lights will flash once to indicate that both doors are locked.
  (With theft-deterrent system)
  The hazard warning lights only flash when the theft deterrent system is armed.
  The hazard warning lights do not flash if both the doors are locked before the theft-deterrent system is properly armed.
  Refer to the theft-deterrent system on page 3-71.
- *Both doors cannot be locked when the key is in the ignition switch.*
- *Confirm that both doors are locked visually or audibly by use of the double click.*

Unlock button

To unlock the driver's door, press the unlock button.

To unlock both doors, press the unlock button again within 3 seconds.

NOTE
(Without theft-deterrent system)
The hazard warning lights will flash twice to indicate that both doors are unlocked.
(With theft-deterrent system)
The hazard warning lights only flash when the theft deterrent system is turned off.
The hazard warning lights do not flash unless the theft deterrent system has been properly turned off.
Refer to the theft-deterrent system on page 3-71.

NOTE
Auto re-lock function
After unlocking with the transmitter, both doors will automatically lock if one of the doors is not opened within about 30 seconds.

Trunk button

To open the trunk, press the trunk button for more than 1 second.

NOTE
- ***(With power retractable hardtop)***
  The trunk lid can only be opened when the power retractable hardtop is fully opened/closed. Open/close the power retractable hardtop completely before opening the trunk lid.
- *The trunk button is disabled when the trunk lid release lock-out button inside the trunk is in the OFF position. Refer to Remote Trunk Lid Release Lock-Out on page 3-34.*

Panic button

If you witness from a distance someone attempting to break into or damage your vehicle, pressing the panic button will activate the vehicle's alarm.

NOTE
The panic button will work whether any door or the trunk lid is open or closed.

Turning on the alarm

Pressing the panic button for 1 second or more will trigger the alarm for about 2 minutes and 30 seconds, and the following will occur:
- The horn sounds intermittently.
- The hazard warning lights flash.

Turning off the alarm

Press any button on the transmitter.

▼Transmitter Maintenance

If the buttons on the transmitter are inoperable and the operation indicator light does not flash, the battery may be dead.
Replace with a new battery before the transmitter becomes unusable.

⚠ CAUTION

- *Install the battery with the positive pole (+) facing down. Battery leakage could occur if it is not installed correctly.*
- *When replacing the battery, be careful not to bend the electrical terminals or get oil on them. Also be careful not to get dirt in the transmitter as it could be damaged.*
- *There is the danger of explosion if the battery is not correctly replaced.*
- *Replace only with the same type battery (CR1620 or equivalent).*
- *Dispose of used batteries according to the following instructions.*
  - *Insulate the plus and minus terminals of the battery using cellophane or equivalent tape.*
  - *Never disassemble.*
  - *Never throw the battery into fire and/or water.*
  - *Never deform or crush.*

Replacing the transmitter battery

1. Unfold the key (page 3-23).
2. Insert a screwdriver into the slot and push the tab to remove the key from the transmitter.

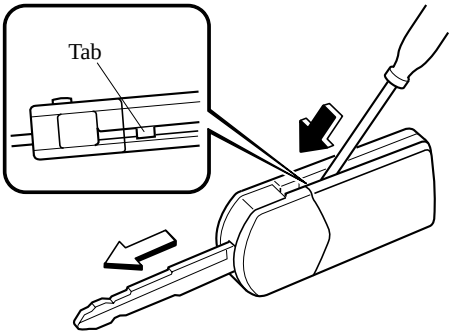

3. Insert a screwdriver into the slot and gently pry open the transmitter.

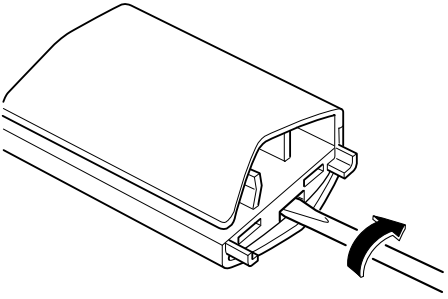

4. Remove the battery.

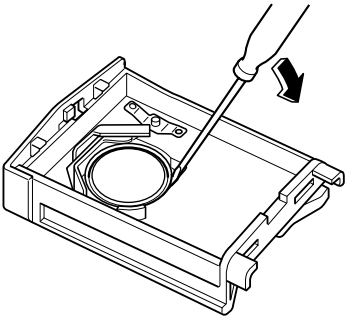

5. Put in the new battery (CR1620 or equivalent) with the positive pole (+) facing down.

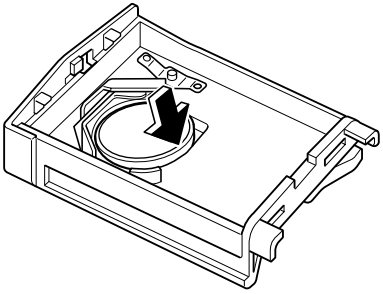

6. Align the front and back covers and snap the transmitter shut.
7. Align the key with the transmitter as shown in the figure, and insert the key until a click sound is heard.

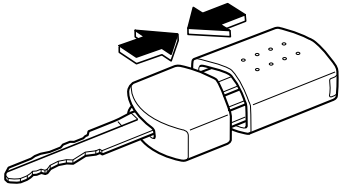

⚠ CAUTION

Insert the key into the transmitter securely until a click sound is heard. If it is not inserted securely, it could detach from the transmitter.

▼Service

If you have a problem with the keyless entry system, consult an Authorized Mazda Dealer.

If your transmitter is lost or stolen, bring all remaining transmitters to an Authorized Mazda Dealer as soon as possible for a replacement and to make the lost or stolen transmitter inoperative.

⚠ CAUTION

Radio equipment like this is governed by laws in the United States. Changes or modifications not expressly approved by the party responsible for compliance could void the user's authority to operate the equipment.

▼Declaration of Conformity

Keyless entry system

(U.S.A)
FCC WARNING
Changes or modifications not expressly approved by the party responsible for compliance could void the user's authority to operate the equipment.
Note
*This device complies with Part 15 of the FCC Rules. Operation is subject to the following two conditions:
(1) this device may not cause harmful interference, and (2) this device must accept any interference received, including interference that may cause undesired operation.

(CANADA)
This device complies with RSS-210 of Industry CANADA. Operation is subject to the following two conditions: (1) this device may not cause interference, and (2) this device must accept any interference, including interference that may cause undesired operation of the device.

(MEXICO)
Este equipo opera a titulo secundario, consecuentemente, debe aceptar interferencias perjudiciales incluyendo equipos de la misma clase y puede no causar interferencias a sistemas operando a titulo primario

Sistema de acceso normal sin llave
Modelo : SKE125-01
Sistema de acceso normal sin llave con marcado de confirmación por radio

COFETEL RCPMAIM05-614

Sistema de arranque y de acceso avanzado sin llave
Modelo : SKE11A-04
Sistema de arranque y de acceso avanzado sin llave con marcado de confirmación por radio

COFETEL RLVMASK08-1121

UAE : 「Approved by TRA」

Door Locks

⚠ WARNING

Always take all children and pets with you or leave a responsible person with them:

Leaving a child or a pet unattended in a parked vehicle is dangerous. In hot weather, temperatures inside a vehicle can become high enough to cause brain damage or even death.

Do not leave the key in your vehicle with children and keep them in a place where your children will not find or play with them:

Leaving children in a vehicle with the key is dangerous. This could result in someone being badly injured or even killed.

Keep both doors locked when driving:

Unlocked doors in a moving vehicle are dangerous. Passengers can fall out if a door is accidentally opened and can more easily be thrown out in an accident.

Always close all the windows, lock the doors and take the key with you when leaving your vehicle unattended:

Leaving your vehicle unlocked is dangerous as children could lock themselves in a hot vehicle, which could result in death. Also, a vehicle left unlocked becomes an easy target for thieves and intruders.

▼Locking, Unlocking with Key

Either door can be locked/unlocked with the key.
Turn the key toward the front to unlock, toward the back to lock.

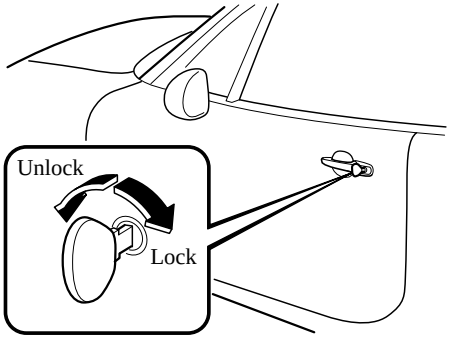

▼Locking, Unlocking with Request Switch (with Advanced Key)

The doors can be locked/unlocked by operating the request switch while carrying the advanced key outside the vehicle, refer to Operations Using Advanced Keyless Functions (page 3-7).

▼Locking, Unlocking with Transmitter (with Advanced Key)

The doors can be locked/unlocked by operating the keyless entry system transmitter, refer to Keyless Entry System (page 3-15).

▼Locking, Unlocking with Transmitter (with Retractable Type Key)

The doors can be locked/unlocked by operating the keyless entry system transmitter, refer to Keyless Entry System (page 3-24).

▼Locking, Unlocking with Door-Lock Knob

To lock any door from the inside, press the door-lock knob.
To unlock, pull it outward.
This does not operate the other door locks.

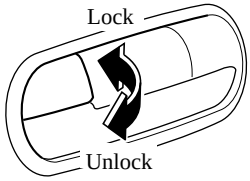

To lock any door with the door-lock knob from the outside, press the door-lock knob to the lock position and close the door.
This does not operate the other door locks.

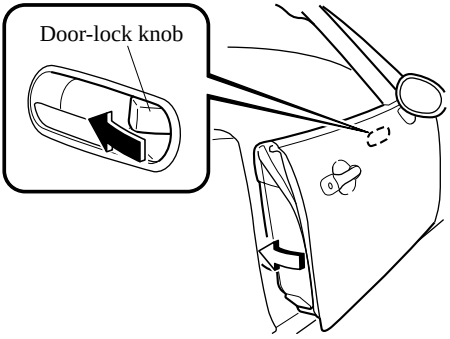

NOTE

- *When locking the doors this way, be careful not to leave the key inside the vehicle.*
- ***(With advanced key)***
  The driver's door cannot be locked using the door-lock knob from the outside.
- ***(With retractable type key)***
  The driver's door cannot be locked using the door-lock knob from the outside if the key is in the ignition switch.

▼Power Door Locks*

Vehicle lock-out prevention

(With advanced key)
The vehicle lock-out prevention feature prevents you from locking yourself out of the vehicle. Both doors will automatically unlock if they are locked using the power door locks with any door open.
(With retractable type key)
The vehicle lock-out prevention feature prevents you from locking yourself out of the vehicle. With the key in the ignition switch, both doors will automatically unlock if they are locked using the power door locks with any door open.

*Some models.

Locking, unlocking with key

Both doors lock automatically when the driver's door is locked with the key.
Both doors unlock when the driver's door is unlocked and the key is held in the unlock position for one second or longer.

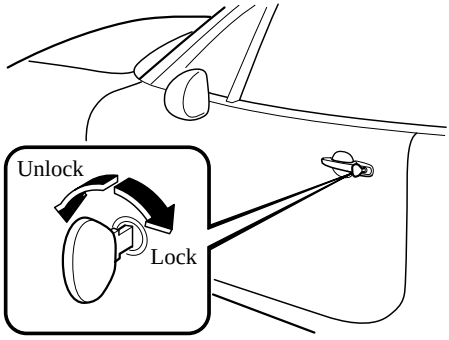

NOTE
Holding the key in the unlocked position in the driver's door lock for about a second unlocks both doors. To unlock only the driver's door, insert the key into the driver's door lock and turn the key briefly to the unlock position and then immediately return it to the center position.

Locking, unlocking with door-lock switch

Both doors lock automatically when LOCK is pressed. They all unlock when the unmarked part of the door-lock switch is pressed.

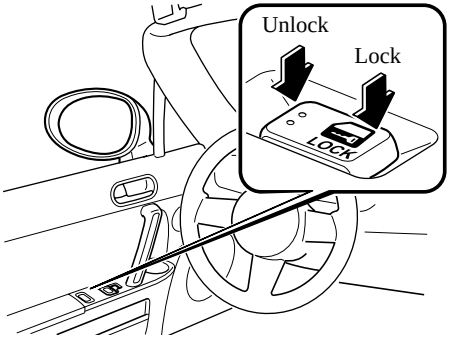

Locking, unlocking with request switch (with advanced key)

Both doors can be locked/unlocked by operating the request switch on the front doors while carrying the advanced key outside the vehicle, refer to Operations Using Advanced Keyless Functions (page 3-7).

Locking, unlocking with transmitter (with advanced key)

Both doors can be locked/unlocked by operating the keyless entry system transmitter, refer to Keyless Entry System (page 3-15).

Locking, unlocking with transmitter (with retractable type key)

Both doors can be locked/unlocked by operating the keyless entry system transmitter, refer to Keyless Entry System (page 3-24).

Trunk Lid

WARNING

Never allow a person to ride in the trunk:

Allowing a person to ride in the trunk is dangerous. In addition, the person in the trunk could be seriously injured or killed during sudden braking or a collision.

Keep the trunk closed when driving:

Exhaust gas entering the cabin of a vehicle through an open trunk is dangerous. This gas contains CO (carbon monoxide), which is colorless, odorless, and highly poisonous. If inhaled, it can cause loss of consciousness and death.

▼Opening and Closing the Trunk Lid

WARNING

Close the trunk lid and do not allow children to play inside the vehicle:

Leaving the trunk lid open or leaving children in the vehicle with the keys is dangerous. Children could open the trunk lid and climb inside resulting in possible injury or death from heat exposure.

Always keep the car from being a tempting place to play by latching the doors and the trunk, and keeping the keys where children can not play with them:

Leaving children or animals unattended in a parked vehicle is dangerous. Babies left sleeping and children who lock themselves in cars or trunks can die very quickly from heat prostration. Do not leave your children or pets alone in a car at any time. Do not leave the car or the trunk unlocked.

Opening the trunk lid with the key

Insert the key into the slot and turn it clockwise.

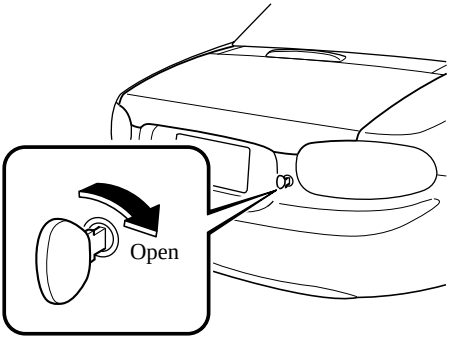

⚠ CAUTION

Do not open the trunk while the power retractable hardtop is opening/closing. The power retractable hardtop and trunk lid mechanisms could be damaged.

Opening the trunk lid with the request switch (with advanced key)

The trunk lid can be opened by operating the request switch on the trunk lid while carrying the advanced key outside the vehicle, refer to Operations Using Advanced Keyless Functions (page 3-7).

Opening the trunk lid with the transmitter (with advanced key)

The trunk lid can be opened by operating the keyless entry system transmitter, refer to Keyless Entry System (page 3-15).

Opening the trunk lid with the transmitter (with retractable type key)

The trunk lid can be opened by operating the keyless entry system transmitter, refer to Keyless Entry System (page 3-24).

Opening the trunk lid with the remote release button

Push the release button.

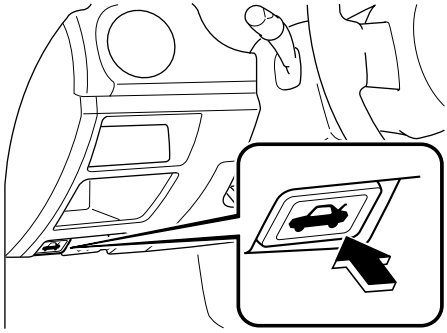

NOTE

(With power retractable hardtop)

The trunk lid can only be opened when the power retractable hardtop is fully opened/closed. Open/close the power retractable hardtop completely before opening the trunk lid.

Closing the trunk lid

Use both hands to push the trunk lid down until the lock snaps shut. Do not slam it. Pull up on the trunk lid to make sure it is secure.

▼Remote Trunk Lid Release Lock-Out

The remote release may be canceled using the trunk lid release lock-out button to prevent anyone in the vehicle from opening the trunk.

NOTE

You cannot prevent another person from getting access to your trunk if you give the person your key.

The switch is mounted inside the trunk.

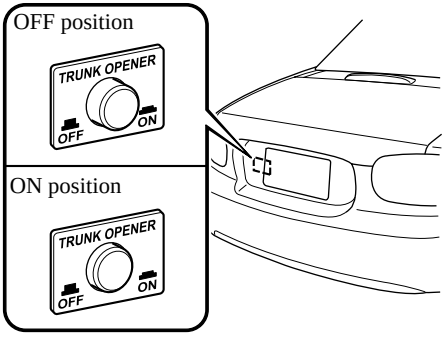

With advanced key

With the switch in the ON position, the remote trunk lid release button can be operated.

With the switch in the OFF position, the remote release button cannot be operated.

To open the trunk lid when the switch is in the OFF position, do one of the following:
- Press the request switch on the trunk lid.
- Press the trunk button on the transmitter.
- Open the trunk with the auxiliary key.

Without advanced key

With the switch in the ON position, the remote trunk lid release button and the trunk button on the transmitter can be operated.

With the switch in the OFF position, the remote release button or the trunk button on the transmitter cannot be operated.

To open the trunk lid when the switch is in the OFF position, open the trunk with the key.

Inside Trunk Release Lever

Your vehicle is equipped with an inside trunk release lever that provides a means of escape for children and adults in the event they become locked inside the trunk.

No matter how careful adults might be with keys and locking their cars, parents should be aware that children may be tempted to play around vehicles and use the trunk as a hiding place.

Adults are advised to familiarize themselves with the operation and location of the inside trunk release lever so that all children can be told about it in an appropriate way, keeping in mind that most vehicles do not have such levers.

WARNING

Close the trunk lid and do not allow children to play inside the vehicle:

Leaving the trunk lid open or leaving children in the vehicle with the keys is dangerous. Children could open the trunk lid and climb inside resulting in possible injury or death from heat exposure.

Always keep the car from being a tempting place to play by latching the doors and the trunk, and keeping the keys where children can not play with them:

Leaving children or animals unattended in a parked vehicle is dangerous. Babies left sleeping and children who lock themselves in cars or trunks can die very quickly from heat prostration. Do not leave your children or pets alone in a car at any time. Do not leave the car or the trunk unlocked.

▼Opening the Trunk Lid from the Inside

Slide the inside trunk release lever in the direction of the arrow. The lever is made of material that will glow for hours in the darkness of the trunk following a brief exposure to ambient light.

The inside trunk release lever is located on the inside of the trunk end trim.

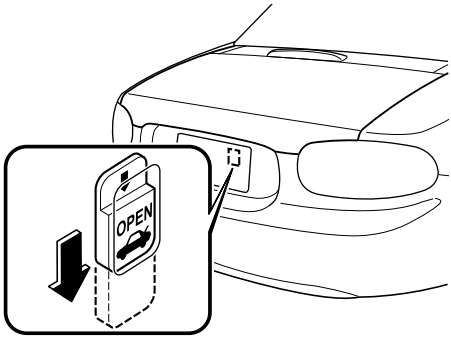

Power Windows

The ignition must be switched ON for the power windows to operate.

⚠ WARNING

Make sure the opening is clear before closing a window:

Closing power windows are dangerous. A person's hands, head, or even neck could be caught by the window and result in serious injury or even death.
This warning applies especially to children.

Do not leave the key in your vehicle with children and keep them in a place where your children will not find or play with them:

Leaving children in a vehicle with the key is dangerous. This could result in someone being badly injured or even killed.

▼Operating the Power Windows (Type A)

Manual opening/closing

To open the window to the desired position, lightly hold down the switch.
To close the window to the desired position, lightly pull up the switch.

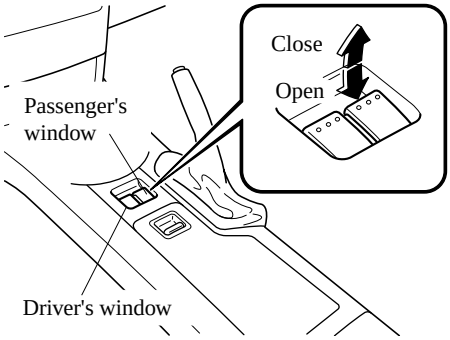

Auto-opening

To fully open the window automatically, press the switch completely down.

To stop the window partway, lightly pull up the switch and then release it.

▼Operating the Driver's Side Power Window (Type B)

Manual opening/closing

To open the window to the desired position, lightly hold down the switch.
To close the window to the desired position, lightly pull up the switch.

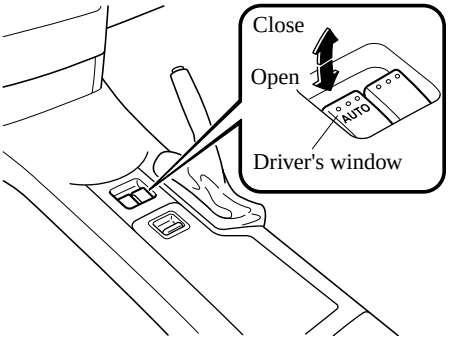

Auto-opening

To fully open the window automatically, press the switch completely down.

To stop the window partway, lightly pull up the switch and then release it.

▼Operating the Passenger Power Window (Type B)

To open the window to the desired position, hold down the switch.
To close the window to the desired position, pull up the switch.

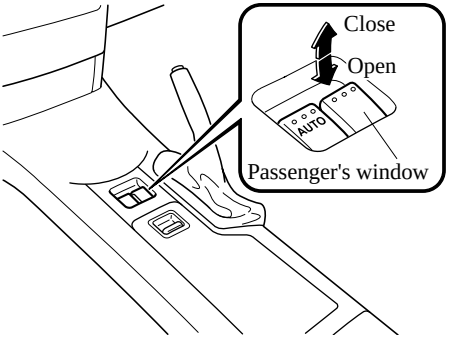

▼Opening the Power Windows from Outside*

Both power windows can be opened from outside the vehicle after the doors are closed.

NOTE

The power windows cannot be opened from outside the vehicle under the following condition:

- *A door or the trunk lid is opened.*
- *The key is inserted into the ignition switch.*
- ***(With advanced key)***
  The start knob is in any position except Lock.

*Some models.

Opening

Because nobody likes getting into a very hot car, we have introduced a way to get a head start on cooling it, even before you put your seat belts on and insert your key in the ignition. If you see the vehicle is in a secure area, you can open the both windows as you approach the vehicle to get the air moving before you even step into the hot vehicle.

WARNING

Use the auto-window function only when you can see the vehicle and it is in a secure area:

Do not let children play with your keys. If they open the window without your knowing, the open windows are an even bigger invitation to a thief than leaving the doors unlocked.

The windows can be opened for ventilating the cabin before getting in the vehicle.
Press once, then press again within 1.5 seconds and hold the unlock button on the transmitter.
After the doors are unlocked, both windows open while the unlock button is pressed.
To stop the windows while opening, release the button.
If the operation is performed from the beginning again, the windows open.

NOTE

The unlock button does not operate unless it is pressed twice sequentially.

Advanced key

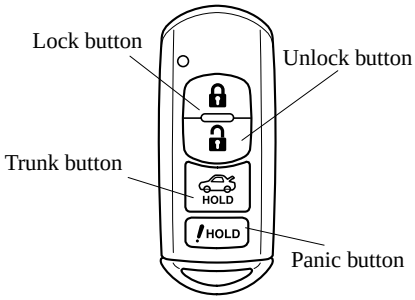

Retractable type key

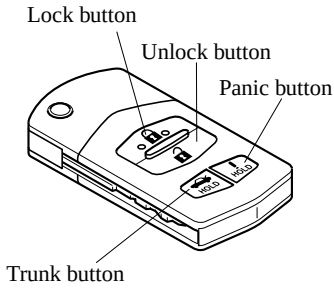

Fuel-Filler Lid and Cap

⚠ WARNING

When removing the fuel-filler cap, loosen the cap slightly and wait for any hissing to stop. Then remove it:

Fuel spray is dangerous. Fuel can burn skin and eyes and cause illness if ingested. Fuel spray is released when there is pressure in the fuel tank and the fuel-filler cap is removed too quickly.

Before refueling, stop the engine, and always keep sparks and flames away from the filler neck:

Fuel vapor is dangerous. It could be ignited by sparks or flames causing serious burns and injuries. Additionally, use of the incorrect fuel-filler cap or not using a fuel-filler cap may result in fuel leak, which could result in serious burns or death in an accident.

⚠ CAUTION

Always use only a genuine Mazda fuel-filler cap or an approved equivalent, available at an Authorized Mazda Dealer. The wrong cap can result in a serious malfunction of the fuel and emission control systems. It may also cause the check engine light in the instrument cluster to illuminate.

▼Fuel-Filler Lid

The remote fuel-filler lid release is mounted in the seat side box.
To open the seat side box, unlock it and pull the release catch.

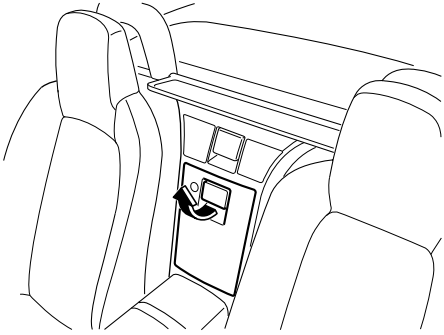

To open the fuel-filler lid, pull on the remote fuel-filler lid release.

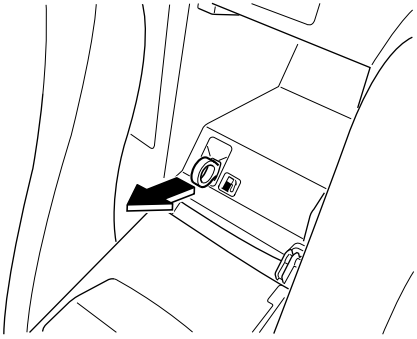

▼Fuel-Filler Cap

To remove the fuel-filler cap, turn it counterclockwise.

To close the fuel-filler cap, turn it clockwise until two or more clicks are heard.

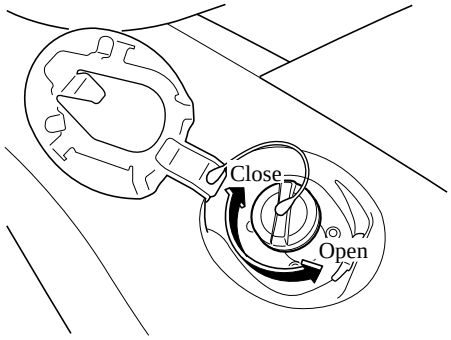

⚠ CAUTION

Make sure the fuel-filler cap is tightened securely. The check engine light may illuminate when the cap is not tightened securely. If the light remains on (even after you have tightened the cap securely, driven, and restarted the engine several times), it may indicate a different problem. Contact an Authorized Mazda Dealer as soon as possible.

NOTE

The removed cap can be attached to the inner side of the lid during refueling to prevent fuel on the cap from dripping onto the vehicle.

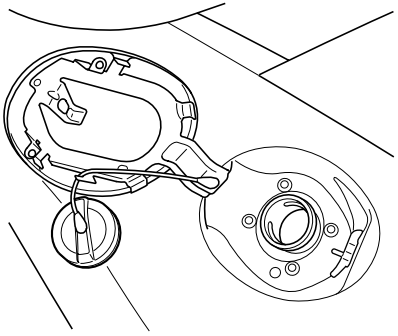

Hood

⚠ WARNING

Always check that the hood is closed and securely locked:

A hood that is not closed and securely locked is dangerous as it could fly open while the vehicle is moving and block the driver's vision which could result in a serious accident.

▼Opening the Hood

1. With the vehicle parked, pull the release handle to unlock the hood.

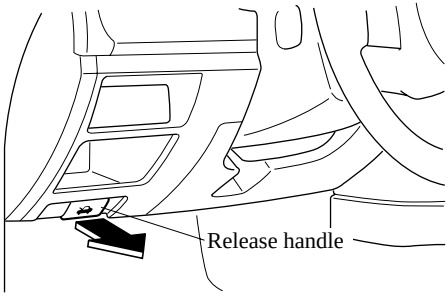

2. Insert your hand into the hood opening and slide the hood latch lever to the right and lift the hood.

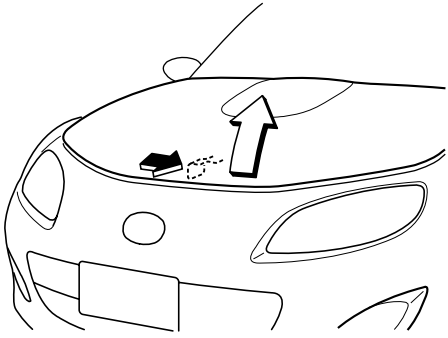

3. Grasp the support rod in the padded area and secure it in the stay hole indicated by the arrow to hold the hood open.

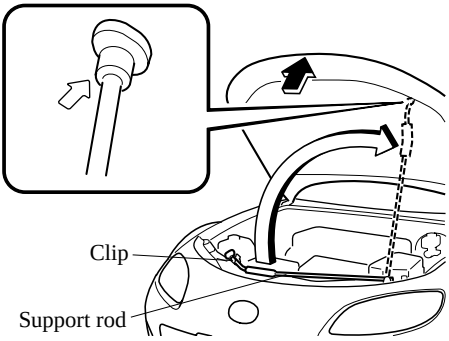

▼Closing the Hood

⚠ WARNING

Do not leave items in the engine compartment:

After you have finished checking or doing servicing in the engine compartment, do not forget and leave items such as tools or rags in the engine compartment.
Tools or other items left in the engine compartment could cause engine damage or a fire leading to an unexpected accident.

1. Check under the hood area to make certain all filler caps are in place and all loose items (e.g. tools, oil containers, etc.) have been removed.
2. Insert the support rod in its clip while holding up the hood. Verify that the support rod is secured in the clip before closing the hood.
3. Close the hood so that it locks securely.

Convertible Top (Soft Top)*

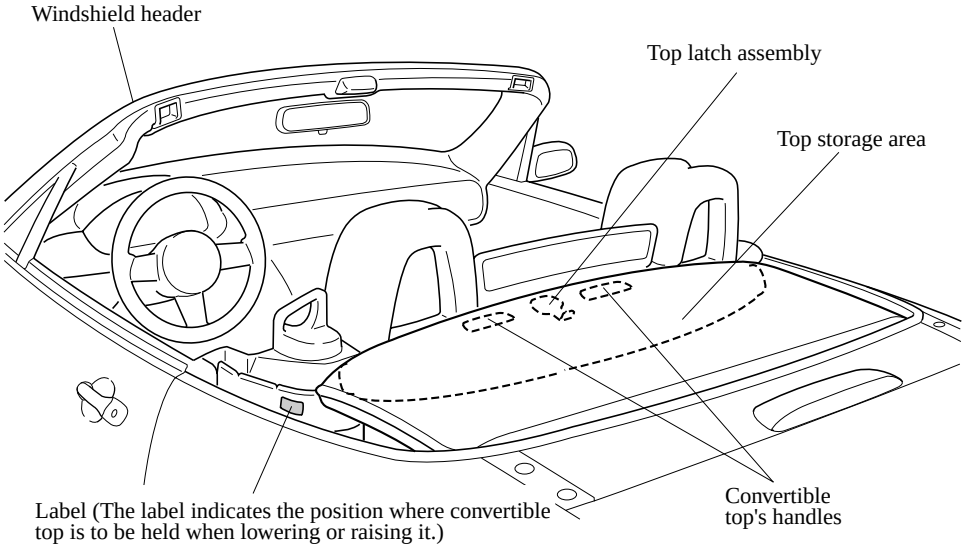

▼Convertible Top Precautions

WARNING

Sit in the seat with the seat belt correctly fastened when the vehicle is moving:

Standing in the vehicle, or sitting on the convertible top storage area or center console when the vehicle is moving is a dangerous way to ride. During a sudden maneuver or collision you could be seriously injured or even killed.

Always keep your hands and fingers away from the fastening mechanisms when moving the convertible top:

It is dangerous to place your hands or fingers near the fastening mechanisms. Your hands or fingers could be caught and injured by the mechanism.

CAUTION

Remove leaves or other matter that may accumulate on and around the soft top. Otherwise, the water drainage outlets could become blocked, resulting in water leakage. For detailed maintenance of the water draining outlets, consult an Authorized Mazda Dealer.

*Some models.

- Before lowering or raising the convertible top, stop in a safe place off the right-of-way and park on a level surface.
- Make sure nothing is on the convertible top or near the back window when raising or lowering the convertible top. Even small objects may interfere and cause damage.
- When lowering the convertible top, make sure objects inside the vehicle are not blown away by the wind.
- Secure all loose objects inside before driving with the convertible top down.
- To help prevent burglary or vandalism and to ensure that the passenger compartment stays dry, close the convertible top securely and lock both doors when leaving the vehicle.
- Do not drive through an automatic car wash; it may damage the convertible top.
- Do not raise or lower the convertible top when the temperature is below 5 °C (41 °F) ; this will damage the convertible top material.
- Do not lower the convertible top when it's wet. If the convertible top dries while folded, it will deteriorate and shrink.
- Lowering the convertible top while it's wet can also cause water to drip into the passenger compartment.
- Do not raise or lower the convertible top in a strong wind as it could damage the convertible top or cause an unexpected accident.

▼Lowering the Convertible Top

1. Make sure the parking brake is applied.
2. Fully open the left and right windows.
3. Turn off the engine.
4. Make sure there are no objects which have been placed in the area where the convertible top is to be retracted.

⚠ WARNING

Do not place heavy or sharp objects in the convertible top storage area:

Putting heavy or sharp objects in the convertible top storage area is dangerous.
During a sudden stop or collision, they can become projectiles that might hit and injure passengers.

5. Pull the top latch outward by pressing the lock release button to detach the lock. Make sure the lock is detached.

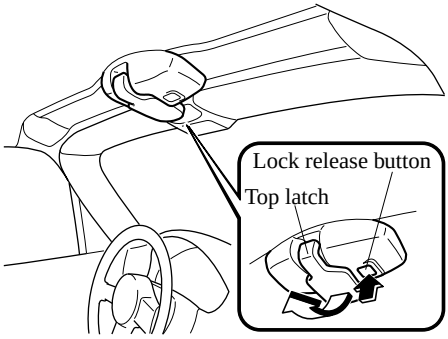

6. Standing outside of the vehicle, hold the convertible top along the center edge and pull it toward the vehicle rear.

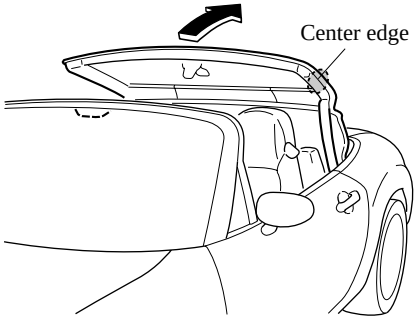

NOTE
To lower the convertible top from inside the vehicle, use the convertible top's handles.

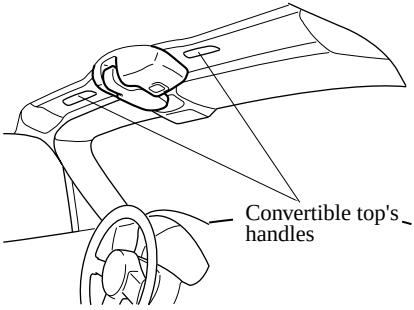

7. Continue to move the convertible top rearward while pressing the rear glass lightly with your hand.

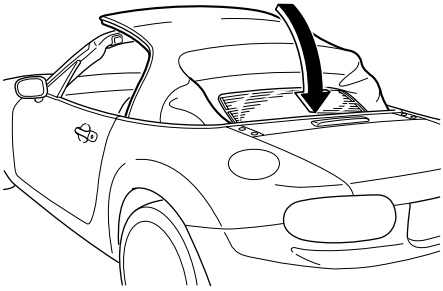

8. After the convertible top has been folded down, press the back end of the folded down convertible top until a click sound is heard, then the front end. Lightly rock the retracted convertible top to make sure it is securely locked.

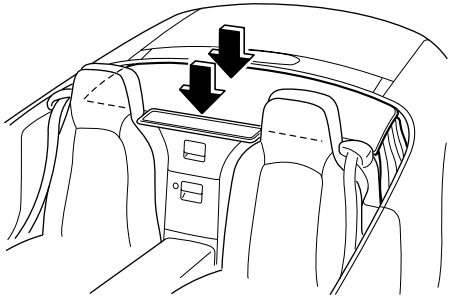

9. Raise the windblocker if it is needed.

NOTE
The windblocker reduces the amount of wind coming into the cabin from behind when driving with the convertible top opened. Refer to Windblocker on page 6-84.

▼Raising the Convertible Top

1. Make sure the parking brake is applied.
2. Fully open the left and right windows.
3. Turn off the engine.
4. Pull the unlock lever outward to disengage the lock.

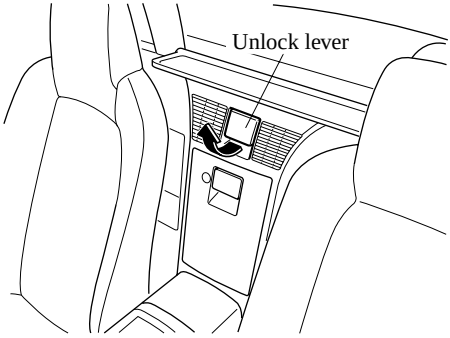

5. Standing outside of the vehicle, hold the convertible top along the center edge and pull it towards the vehicle front.

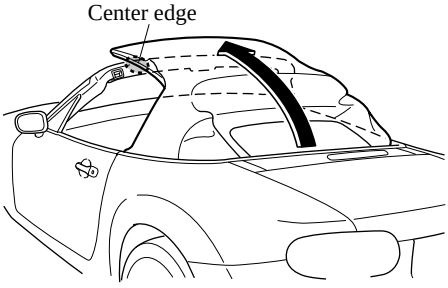

NOTE
To raise the convertible top from inside the vehicle, use the convertible top's handles.

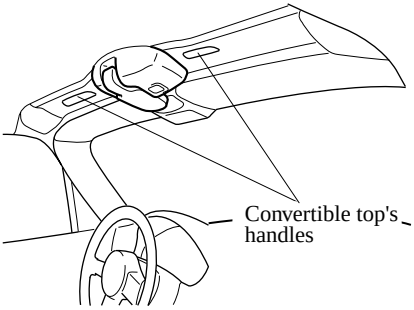

6. Sitting in a seat, grasp the convertible top's handles, and press the convertible top against the windshield.
   Move the top latch slowly to make sure the anchor engages with the striker, then rotate the top latch to the lock position until a click sound is heard.

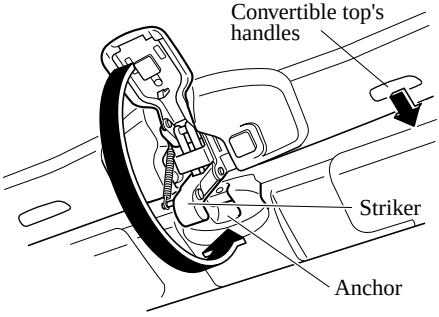

⚠ CAUTION

Driving with the convertible top not fully locked could damage the convertible top.
If the red indicator is visible on the lock release button, the convertible top is not locked. After locking the convertible top, verify that the red indicator is not visible.

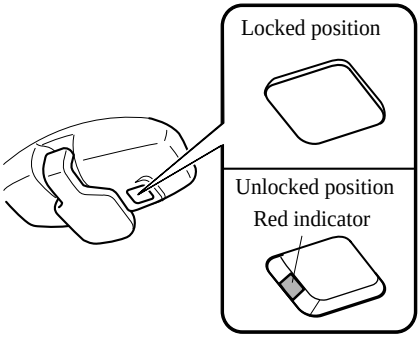

NOTE

- *The convertible top may be constricted if it is left retracted for a long period. Therefore, if the top has become constricted, it may be difficult to hook the top latch striker to the anchor.*
- *Make sure the convertible top is securely locked by pushing up on it. If it still sounds loose (rattles) after being locked by the top latch, have it inspected at an Authorized Mazda Dealer.*

▼Taking Care of the Top

Refer to Convertible Top Maintenance (page 8-55) for information on taking care of the convertible top.

Convertible Top (Power Retractable Hardtop)*

The power retractable hardtop opens/closes electrically by operating switches in the vehicle. When opening/closing the hardtop, the hardtop, deck and window glass operate together. The hardtop is stored in the storage area under the deck.

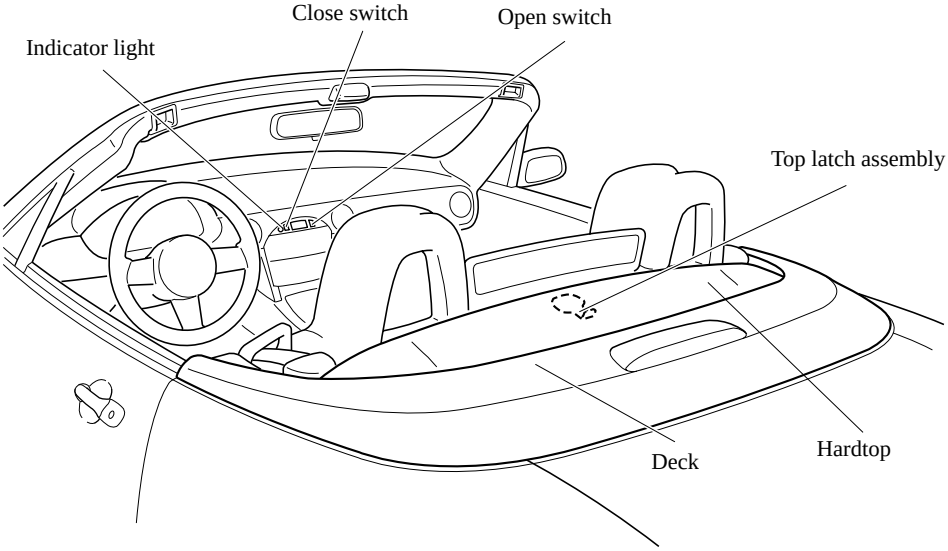

 *Some models.

▼Power Retractable Hardtop Precautions

⚠ WARNING

Always confirm that there are no people around the vehicle before operating the hardtop:

If the hardtop were to operate unexpectedly, it could result in an accident and serious injury from someone getting caught in the mechanism.

Always drive safely and observe the speed limit:

Rollover accidents on a hardtop vehicle are dangerous. The hardtop is not as strong as a regular steel roof. Rollover accidents could dislodge or crush the hardtop and cause serious injuries or even death, just as with no top.

Sit in the seat with the seat belt correctly fastened when the vehicle is moving:

Standing in the vehicle, or sitting on the deck or center console when the vehicle is moving is a dangerous way to ride. During a sudden maneuver or collision you could be seriously injured or even killed.

Always keep your hands and fingers away from the fastening mechanisms when moving the hardtop:

It is dangerous to place your hands or fingers near the fastening mechanisms. Your hands or fingers could be caught and injured by the mechanism.

⚠ CAUTION

- *Do not drive with the hardtop partially opened; this could damage the hardtop or cause an unexpected accident.*
- *Children should not be allowed to play with the open/close switch.*
- *Do not place objects or cargo around the deck, rear glass, or the hardtop storage area.*
  Even small objects may interfere and cause damage.
- *Remove leaves that accumulate on and around the hardtop. If the leaves are not removed, they may block the water drainage outlets.*
- *Before opening the hardtop, make sure the rear window defogger switch (Defroster) is turned off. Otherwise the heat generated from the defogger could damage the hardtop and the internal material.*
- *When opening/closing the hardtop, verify that there is no obstruction above the hardtop (about 1.5 m from the ground) so as not to damage the hardtop or the obstruction.*
- *When opening/closing the hardtop, do not apply any load to the hardtop or the deck. The opening/closing mechanism of the hardtop may be damaged.*

- Open/close the hardtop with the vehicle parked on level ground in a safe place where the vehicle does not obstruct traffic. If the hardtop is opened/closed on a slope or bump, the opening/closing mechanism of the hardtop may be damaged.

- Before opening or closing the hardtop, stop in a safe place off the right-of-way and park on a level surface.
- When opening the hardtop, make sure objects inside the vehicle are not blown away by the wind.
- Secure all loose objects inside before driving with the hardtop down.
- To help prevent burglary or vandalism and to ensure that the passenger compartment stays dry, close the hardtop securely and lock both doors when leaving the vehicle.
- Do not drive through an automatic car wash as it may damage the hardtop.
- Do not open or close the hardtop forcefully when the ambient temperature is low and the hardtop or the surrounding area is frozen as it could damage the hardtop.
- Opening the hardtop while it is wet can also cause water to drip into the passenger compartment.
- Do not open or close the hardtop in a strong wind as it could damage the hardtop.

▼Operation Indicator Light

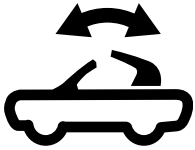

When illuminated

This notifies the driver that the hardtop is only partially open.

When flashing

This indicates that the hardtop is being open/closed. (During button operation)

When not illuminated

This indicates that the hardtop is open/closed fully.

NOTE

If the operation indicator light flashes quickly, there may be a system malfunction. Consult an Authorized Mazda Dealer.

▼Operation Conditions

If the following conditions have been satisfied, the hardtop can be opened/closed.

- The vehicle is parked on a level surface off the right-of-way and the parking brake is firmly set.
- The ignition is switched ON.
- Put a vehicle with an automatic transmission in Park (P) or Neutral (N), a manual transmission in Neutral.
- The trunk lid is closed.

NOTE

If the power retractable hardtop cannot be closed even after the operation conditions are all met, have it checked at an Authorized Mazda Dealer.
The hardtop can be closed manually as an emergency measure.
Refer to The Power Retractable Hardtop Does not Close on page 3-54.

▼Opening the Power Retractable Hardtop

1. Park on a level surface off the right-of-way and firmly set the parking brake.
2. Put a vehicle with an automatic transmission in Park (P), a manual transmission in Neutral.
3. Apply the parking brake with the brake pedal depressed.
4. Start the Engine.

NOTE
Do not open/close the hardtop with the engine stopped. Otherwise the vehicle's battery power could be depleted.

5. With the lock release button depressed, pull the top latch outward to unlock.

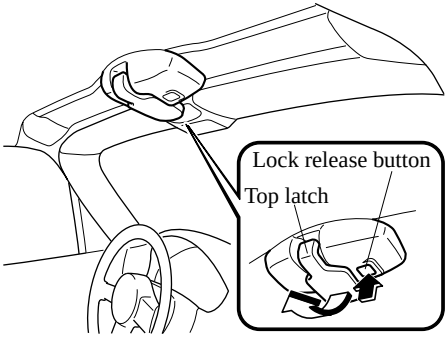

6. Verify that the operation indicator light is illuminated and the lock is detached.
7. Press and hold the open button until the hardtop opens completely.

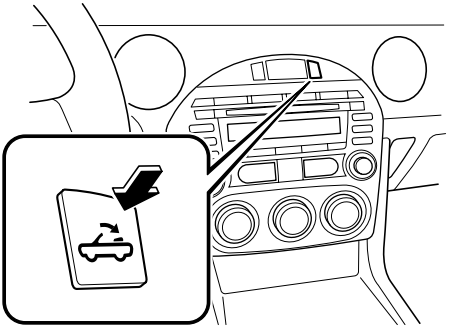

NOTE
- *When the open switch is pressed, a beep sound is heard.*
- *The hardtop keeps opening and the operation indicator light flashes while the open switch is pressed.*
- *If the switch is released while the hardtop is opening, the hardtop stops opening. If the switch is pressed again, the hardtop resumes opening.*

8. The deck opens.

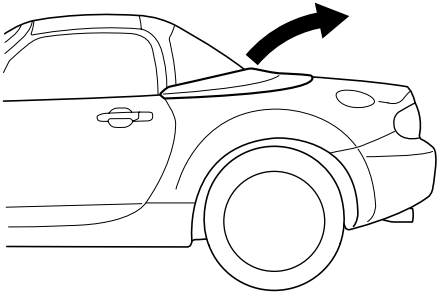

NOTE
If the windows are closed, the windows automatically open partially when the deck opens.

9. The hardtop opens.

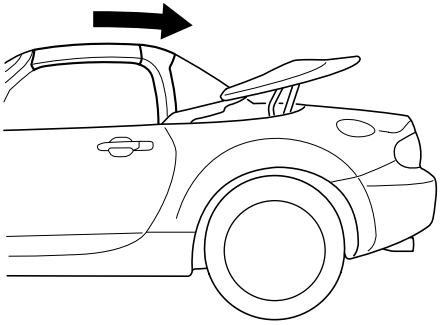

10. The hardtop retracts under the deck.

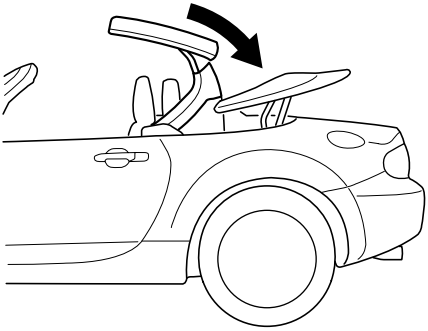

11. The deck closes.

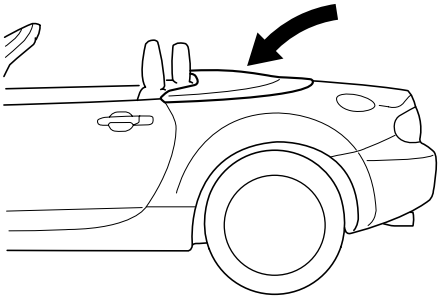

NOTE
When the operation is finished, a beep sound is heard and the operation indicator light turns off.

▼Closing the Power Retractable Hardtop

1. Park on a level surface off the right-of-way and firmly set the parking brake.
2. Put a vehicle with an automatic transmission in Park (P), a manual transmission in Neutral.
3. Apply the parking brake with the brake pedal depressed.
4. Start the Engine.

NOTE
Do not open/close the hardtop with the engine stopped. Otherwise the vehicle's battery power could be depleted.

5. Press and hold the close button until the hardtop closes completely.

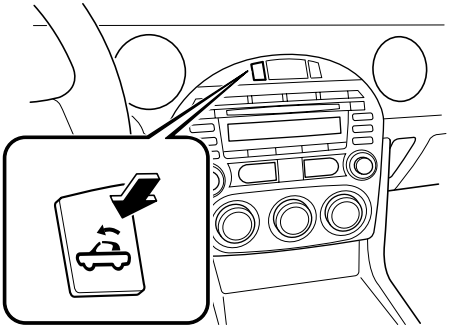

NOTE
- *When the close switch is pressed, a beep sound is heard.*
- *The hardtop keeps closing and the operation indicator light flashes while the close switch is pressed.*
- *If the switch is released while the hardtop is closing, the hardtop stops closing. If the switch is pressed again, the hardtop resumes closing.*

6. The deck opens.

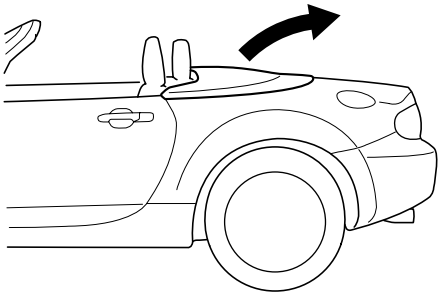

NOTE
If the windows are closed, the windows automatically open partially when the deck opens.

7. The hardtop comes out from under the deck.

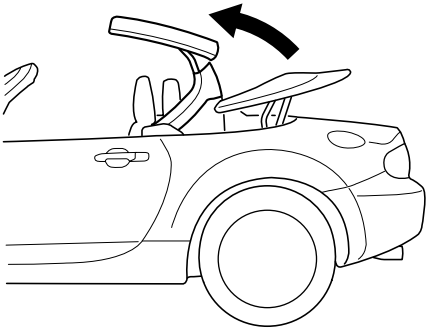

8. The hardtop closes.

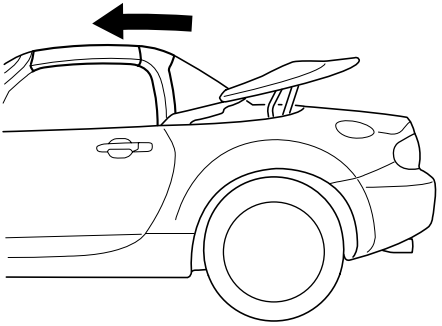

9. The deck closes.

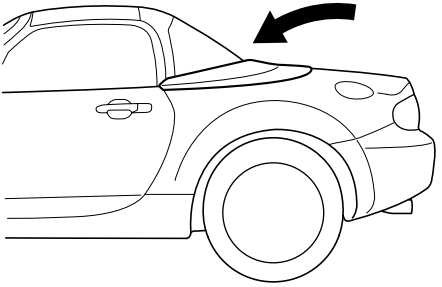

NOTE
- *When the operation is finished, a beep sound is heard and the operation indicator light illuminates.*
- *The power windows cannot be closed automatically.*

10. Move the top latch slowly to make sure the anchor engages with the striker, then rotate the top latch to the lock position until a click sound is heard.

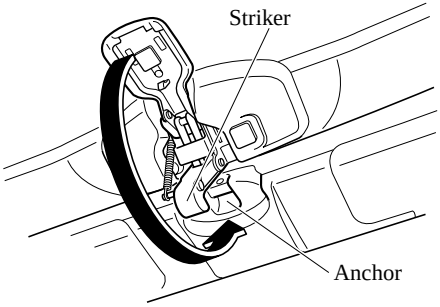

CAUTION

Driving with the hardtop not fully locked could damage the hardtop. If the red indicator is visible on the lock release button, the hardtop is not locked. After locking the hardtop, verify that the red indicator is not visible.

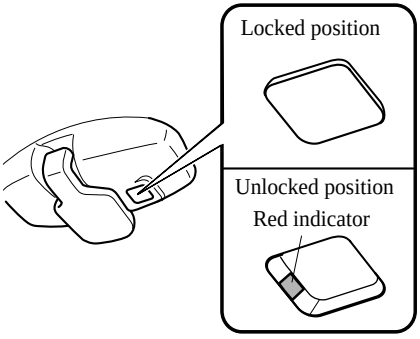

NOTE

- *The operation indicator light turns off when the top latch hook is locked.*
- *If the hardtop is not closed properly even with the top latch locked, contact Mazda to have it inspected.*

▼The Power Retractable Hardtop Does not Close

If the hardtop cannot be closed electrically by pressing the close switch, verify the power retractable hardtop operation conditions first.
Refer to Operation Conditions on page 3-50.
If the power retractable hardtop cannot be closed even after the operation conditions are all met, have it checked at an Authorized Mazda Dealer.
If you are unable to have the hardtop checked at an Authorized Mazda Dealer, the hardtop can be closed manually as an emergency measure.
The procedure for manually closing the hardtop is as follows:

1. Release the locks of the deck and open it. (Refer to Opening the deck)
2. Lift up the hardtop and close it. (Refer to Closing the hardtop)
3. Tie the ropes to the deck links and close the deck. (Refer to Closing the deck)

CAUTION

- *Do not drive the vehicle with the hardtop open halfway.*
- *Do not perform the procedure in a strong wind as it could cause an unexpected accident.*
- *Two adults are required to perform the procedure, especially when lifting up the hardtop. Do not do it alone so as not to cause injury or vehicle damage.*
- *Some steps in the procedure require using multiple tools at the same time and a certain level of technical expertise. In addition, holding your body extended over the car can result in muscle strains so Mazda recommends having the hardtop checked at an Authorized Mazda Dealer.*

NOTE

Use a suitable means of illumination, such as a flashlight, to improve visibility under the deck lid when performing this task.

Before closing manually

1. Park on a level surface off the right-of-way and firmly set the parking brake.
2. Put a vehicle with an automatic transmission in Park (P), a manual transmission in Reverse (R) or 1, and turn off the engine.
3. Switch the ignition off while depressing the brake pedal.
4. Turn on the hazard warning flasher if it is needed.

WARNING

Verify that the ignition is switched off before manually operating the hardtop:

Manually retracting the hardtop with the ignition not switched off is dangerous as the retractor motors could turn on suddenly and cause injury resulting from hands or fingers being pinched in the mechanism.

Manual closing

Tool preparation

Locate the following tools in the glove box.
Refer to Tool Storage on page 7-5.

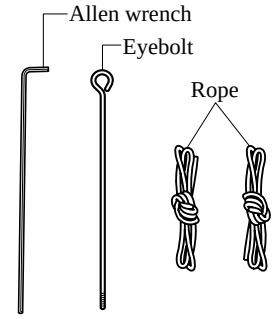

Opening the deck

1. Remove the antenna if it is installed. Refer to Detachable Type on page 6-14.

CAUTION

Do the procedure with the antenna removed. The antenna may be damaged if it is left installed.

NOTE

- *The gear units on both sides have to be unlocked to release the deck before it is raised manually. Because the deck is heavy, two adults are required to raise it.*
- *The following describes the procedure for the gear unit on one side. Perform the procedure on both sides.*

2. Insert the Allen wrench into the Allen socket in the bolt head that is pointed forward of the gear unit located under the deck lid as shown in the figure.

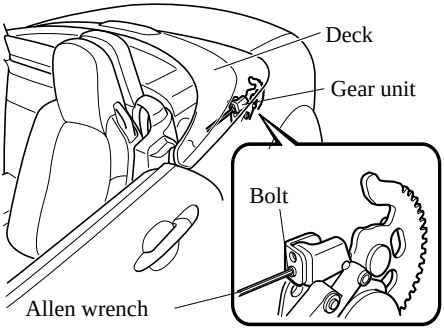

NOTE

The gear units are located underneath the deck.

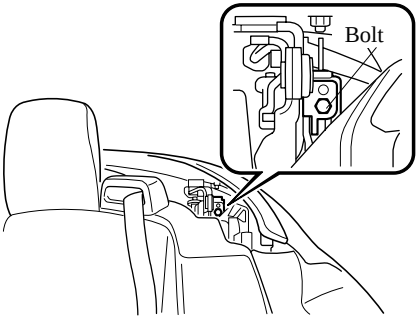

3. Use the eyebolt to get enough torque on the short leg of the Allen wrench and turn the Allen wrench 4 times counterclockwise.

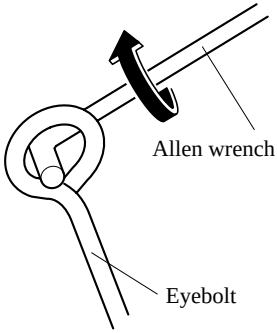

4. Disconnect the eyebolt from the Allen wrench leaving the Allen wrench in place, and insert the threaded end of the eyebolt in the hole directly above the Allen socket and tighten it clockwise two full turns.

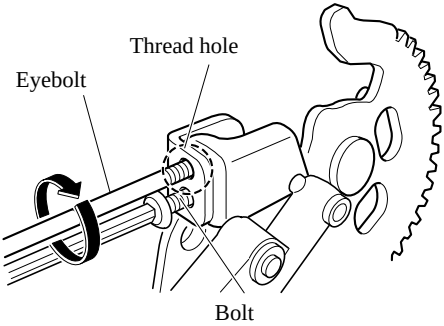

NOTE

Tighten the eyebolt with the Allen wrench inserted. The Allen wrench can serve as a reference for inserting the eyebolt more easily.

5. Remove the bolt, which is loosened using the Allen wrench, by turning it counterclockwise.

NOTE

- *After the bolt is clear of the hole, keep the Allen wrench level while pulling it out with the bolt attached so as to prevent the bolt from hitting the vehicle and dropping.*
- *Bring the removed bolt to an Authorized Mazda Dealer. If you drop the bolt in the vehicle by mistake, contact an Authorized Mazda Dealer.*

6. Tighten the eyebolt by turning it clockwise 5 more times.

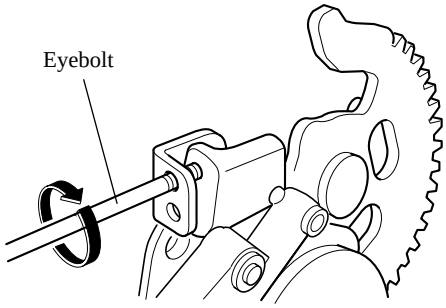

7. Unscrew the eyebolt now by turning it counterclockwise.
8. Insert the threaded end of the eyebolt through the guide.

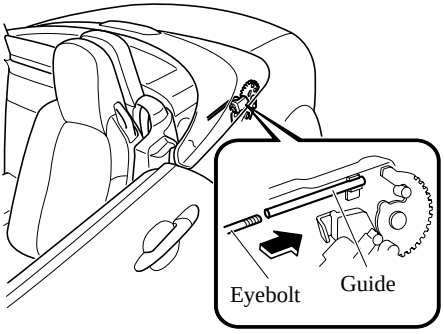

9. Press the eyebolt against the sector gear.

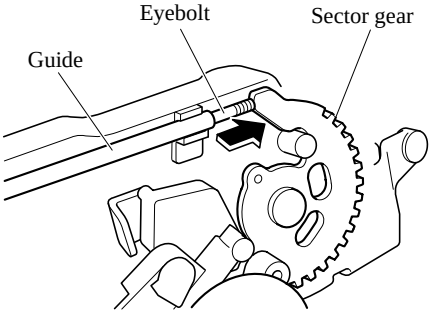

10. Press and rotate the sector gear rearward to release the lock.

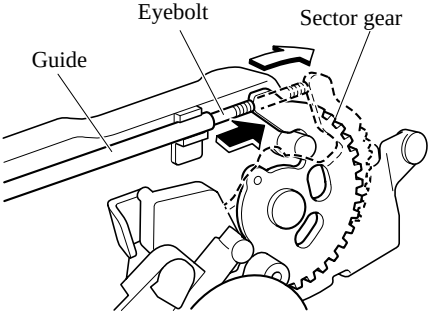

⚠ CAUTION

When releasing the sector gear lock using the eyebolt, make sure the eyebolt remains centered as you push it against the sector gear lock. If the eyebolt slips it could cause your hand to veer and hit the vehicle resulting in minor scrapes or bruises.

11. Pull out the eyebolt from the guide when the lock is released.
12. Do the same procedure on the other side.

13. Lift up the deck using two adults, one on each side of the vehicle, and open the deck completely.

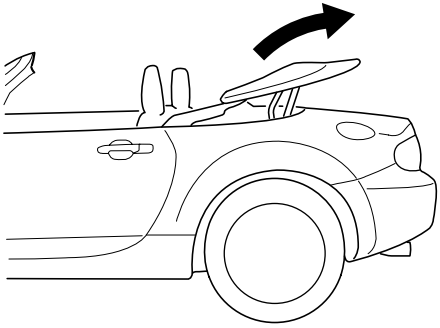

CAUTION

- *Lift the deck using two adults. Doing it alone could result in injury or the deck lid mechanism being twisted which could damage it.*
- *Do not let go of the deck lid on both sides until it is fully open. The deck lid could fall if it is released too soon and cause injury.*
- *Do not attempt to forcefully lift the deck. If the lock has not detached and the deck is forcefully lifted, it could damage the deck.*

Closing the hardtop

CAUTION

- *The procedure should be done by at least two adults. Do not do it alone so as not to cause injury or vehicle damage.*
- *Some steps in the procedure require holding your body in a strained position for extended periods and if over exerted it could result in injury.*
- *Be very careful when closing the hardtop to prevent pinching and possible injury.*

1. Grasp the hardtop along the side and front surfaces and lift it up enough to create a clearance at the rear of hardtop.

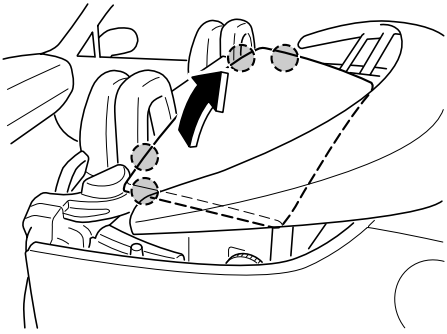

2. Grasp the hardtop along the side and rear surfaces and lift it up enough to create a clearance behind the rear glass.

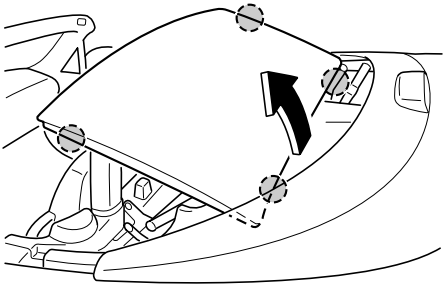

3. Grasp the hardtop along its side surface and the rear area of the rear glass, pull the hardtop towards the front of the vehicle, and completely close it.

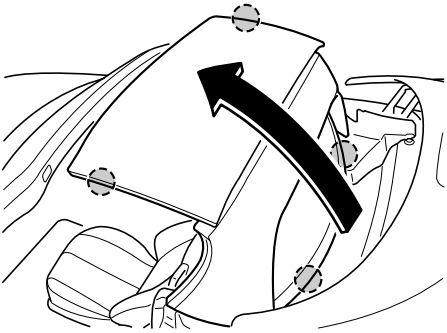

4. Lock the top latch.
   Refer to Closing the Power Retractable Hardtop on page 3-52.

Closing the deck

1. Loop the center of the rope through the pin on the link twice so that it does not loosen.

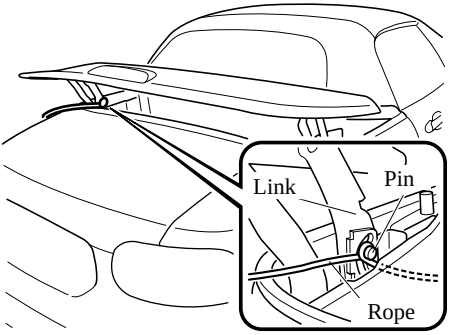

NOTE

Before closing the deck, two small ropes need to be installed and tied into the trunk so that the deck does not pop up while driving, and so that the deck can be raised for servicing by an Authorized Mazda Dealer.

2. Route one end of the rope to the inside of the vehicle passing it through the gap in the trim. Route the other end to the outside of the vehicle passing it through the links.

To the inside of the vehicle

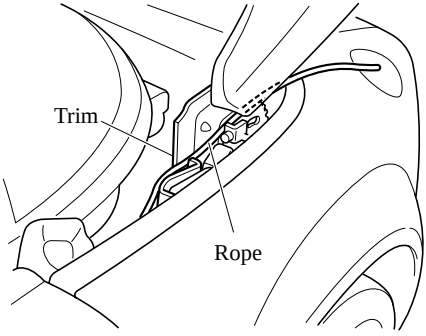

To the outside of the vehicle

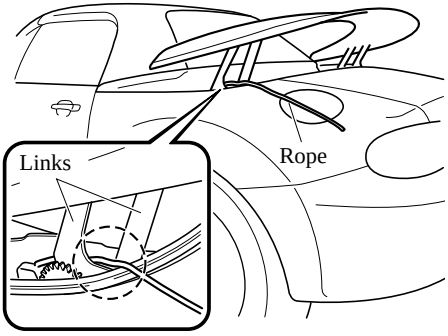

NOTE
Always route the one end of the rope to the inside of the vehicle. If it is not inside the vehicle, it will be difficult to service the hardtop at an Authorized Mazda Dealer.

3. Do the same procedure on the other side.
4. Close the deck uniformly on both sides using two adults, one on each side of the vehicle.

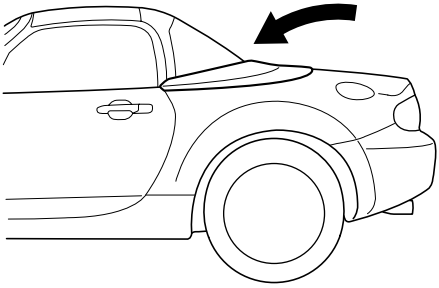

⚠ CAUTION

Close the deck using two adults. Doing it alone could result in injury or the deck lid mechanism being twisted which could damage it.

5. Lightly pushing the deck downward, pull the ropes to the rear along both sides of the trunk to hold the deck down.

NOTE
Pull the ropes horizontally to the vehicle rear.

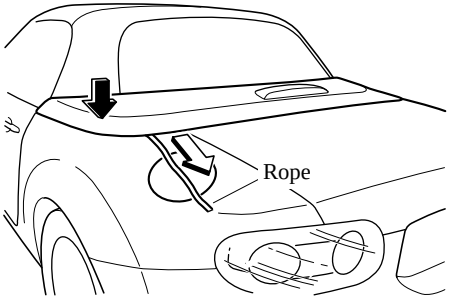

6. Lightly move the deck and verify that it is secured completely.
7. Open the trunk using the key, and tie the rope to the bracket and knot it twice so that it does not loosen.

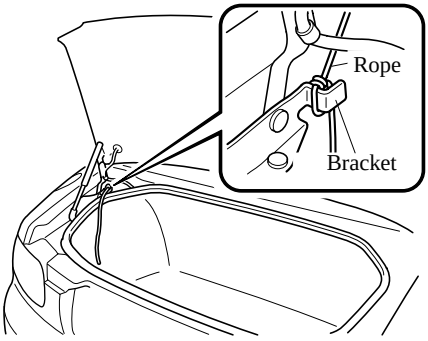

⚠ CAUTION

Tie the ropes securely so that the deck does not open while the vehicle is being driven.

NOTE
Open the trunk using the key. The remote release button, advanced keyless entry function, and the keyless entry system do not operate when this emergency procedure is done.

8. Tie off the other side rope the same way.
9. Close the trunk lid.

After finishing the procedure

After finishing the procedure, have the hardtop checked at an Authorized Mazda Dealer as soon as possible.

⚠ WARNING

Drive the vehicle at a speed of 40 km/h (25 mph) or lower before having the hardtop checked at an Authorized Mazda Dealer:
The hardtop may open while the vehicle is being driven and cause an accident.

NOTE
The trunk cannot be opened with the remote release button, advanced keyless entry function, and the keyless entry system as they are disabled when this emergency procedure is done.

▼Power Retractable Hardtop Appearance Care

Refer to Hardtop Maintenance (page 8-56) for information on retractable hardtop appearance care.

▼When Warning Indicator/Beep is Activated

If an improper operation is performed or a system malfunction has occurred, the indicator light or a warning beep is activated to notify the user of improper operation or a system malfunction.

Warning	What to check
A warning beep sound is heard when the open or close switch is pressed.	Make sure that all the conditions for operating the retractable hardtop have been met. If the chime sounds despite having met all the operation conditions, consult an Authorized Mazda Dealer to have the system inspected.
A warning beep sound is heard when the open or close switch is released.	The hardtop is not fully opened or closed. Press the switch until the open or close operation is completed.
A warning beep sound is heard continuously and the indicator light is illuminated while the vehicle is driven.	The hardtop has not completely opened or closed. Continue to press the button until the operation is completed. After the hardtop is completely closed, latch the top latch.
If the open or close button has not been operated and the operation indicator light is flashing:	The system may have a malfunction. Have the vehicle checked at an Authorized Mazda Dealer.

Immobilizer System (with Advanced Key)

The immobilizer system allows the engine to start only with an advanced key the system recognizes.

If someone attempts to start the engine with an unrecognized advanced key, the engine will not start, thereby helping to prevent the theft of your vehicle.
If you have a problem with the immobilizer system or the advanced key (including auxiliary key), consult an Authorized Mazda Dealer.

⚠ CAUTION

- *Radio equipment like this is governed by laws in the United States.*
  Changes or modifications not expressly approved by the party responsible for compliance could void the user's authority to operate the equipment.
- *To avoid damage to the key, do not:*
  - *Drop the key.*
  - *Get the key wet.*
  - *Expose the key to any kind of magnetic field.*
  - *Expose the key to high temperatures on places such as the dashboard or hood, under direct sunlight.*

⚠ CAUTION

Do not allow the following when starting the engine with the auxiliary key due to an advanced key dead battery or other malfunction. Otherwise the signal from the auxiliary key will not be received correctly and the engine may not start.

- *A key ring rests on the key grip.*

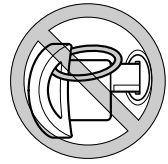

- *Metal parts of other keys or metal objects touch the auxiliary key grip.*

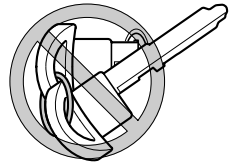

- *Spare auxiliary keys or keys for other vehicles equipped with an immobilizer system touch or come near the auxiliary key.*

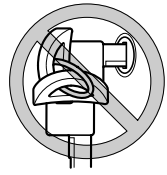

- *Devices for electronic purchases, or security passage which touch or come near the auxiliary key.*

NOTE

- *The advanced keys (including auxiliary key) carry a unique electronic code. For this reason, and to assure your safety, obtaining a replacement advanced key (including auxiliary key) requires some waiting time. They are only available through an Authorized Mazda Dealer.*
- *Always keep a spare advanced key in case one is lost. If an advanced key is lost, consult an Authorized Mazda Dealer as soon as possible.*
- *If you lose an advanced key (including auxiliary key), an Authorized Mazda Dealer will reset the electronic codes of your remaining advanced keys (including auxiliary keys) and immobilizer system. Bring all the remaining advanced keys (including auxiliary keys) to an Authorized Mazda Dealer to reset.*
  Starting the vehicle with a key that has not been reset is not possible.

Declaration of Conformity

(U.S.A)
FCC WARNING
Changes or modifications not expressly approved by the party responsible for compliance could void the user's authority to operate the equipment.
Note
*This device complies with Part 15 of the FCC Rules. Operation is subject to the following two conditions:
(1) this device may not cause harmful interference, and (2) this device must accept any interference received, including interference that may cause undesired operation.

(CANADA)
This device complies with RSS-210 of Industry CANADA. Operation is subject to the following two conditions: (1) this device may not cause interference, and (2) this device must accept any interference, including interference that may cause undesired operation of the device.

(MEXICO)
Este equipo opera a titulo secundario, consecuentemente, debe aceptar interferencias perjudiciales incluyendo equipos de la misma clase y puede no causar interferencias a sistemas operando a titulo primario

Sistema inmovilizador
Modelo : IMB111-02
Sistema inmovilizador con marcado de confirmación por radio

COFETEL RCPMAIM05-614

Sistema inmovilizador
Modelo : IMB111-03
Sistema inmovilizador con marcado de confirmación por radio

COFETEL RCPMAIM05-935

UAE :「Approved by TRA」

▼Operation

Arming

The system is armed when the ignition is switched from ON to ACC or OFF. The security indicator light in the instrument cluster flashes every 2 seconds until the system is disarmed.

Disarming

The system is disarmed when the ignition is switched ON with the registered advanced key.
The security indicator light illuminates for about 3 seconds and goes out.

If the engine does not start with the correct advanced key, and the security indicator light keeps illuminating or flashing, the system may have a malfunction. Consult an Authorized Mazda Dealer.

NOTE

- *The engine may not start and the security indicator light may illuminate or flash if the advanced key is placed in an area where it is difficult for the system to detect the signal, such as on the dashboard, or in the glove box. Move the advanced key to another place, switch the ignition off, and then restart the engine.*
- *Signals from a TV or radio station, or from a transceiver or a mobile telephone could interfere with your immobilizer system. If you are using the proper advanced key and the engine fails to start, check the security indicator light. If the indicator light is flashing, switch the ignition to ACC or switch the ignition off and wait for a while, then restart the engine. If it does not start after 3 or more tries, contact an Authorized Mazda Dealer.*
- *If the security indicator light flashes continuously while you are driving, do not shut off the engine. Go to an Authorized Mazda Dealer and have it checked. If the engine is shut off while the indicator light is flashing, you will not be able to restart it.*
- *Since the electronic codes are reset when repairing the immobilizer system, the advanced key (including auxiliary key) are needed. Bring all the advanced keys (including auxiliary keys) to an Authorized Mazda Dealer.*

▼Modification and Add-On Equipment

Mazda cannot guarantee the immobilizer system's operation if the system has been modified or if any add-on equipment has been installed.

⚠ CAUTION

To avoid damage to your vehicle, do not modify the system or install any add-on equipment to the immobilizer system or the vehicle.

Immobilizer System (without Advanced Key)

The immobilizer system allows the engine to start only with a key the system recognizes.

If someone attempts to start the engine with an unrecognized key, the engine will not start, thereby helping to prevent the theft of your vehicle.
If you have a problem with the immobilizer system or the key, consult an Authorized Mazda Dealer.

⚠ CAUTION

- *Radio equipment like this is governed by laws in the United States.*
  Changes or modifications not expressly approved by the party responsible for compliance could void the user's authority to operate the equipment.
- *To avoid damage to the key, do not:*
  - *Drop the key.*
  - *Get the key wet.*
  - *Expose the key to any kind of magnetic field.*
  - *Expose the key to high temperatures on places such as the dashboard or hood, under direct sunlight.*

CAUTION

When starting the engine do not allow the following, as the engine may not start due to the electronic signal from the ignition key not being transmitted correctly.

- *A key ring rests on the key grip.*

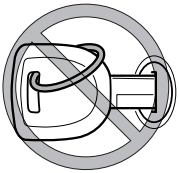

- *Metal parts of other keys or metal objects touch the key grip.*

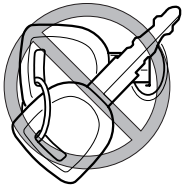

- *Spare keys or keys for other vehicles equipped with an immobilizer system touch or come near the key grip.*

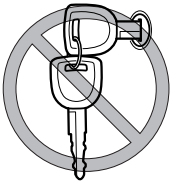

- *Devices for electronic purchases, or security passage which touch or come near the key.*

NOTE

- *The keys carry a unique electronic code. For this reason, and to assure your safety, obtaining a replacement key requires some waiting time. They are only available through an Authorized Mazda Dealer.*
- *Always keep a spare key, in case one is lost. If a key is lost, contact an Authorized Mazda Dealer as soon as possible.*
- *If you lose a key, an Authorized Mazda Dealer will reset the electronic codes of your remaining keys and immobilizer system. Bring all the remaining keys to an Authorized Mazda Dealer to reset. Starting the vehicle with a key that has not been reset is not possible.*

Declaration of Conformity

(U.S.A)
FCC WARNING
Changes or modifications not expressly approved by the party responsible for compliance could void the user's authority to operate the equipment.
Note
*This device complies with Part 15 of the FCC Rules. Operation is subject to the following two conditions:
(1) this device may not cause harmful interference, and (2) this device must accept any interference received, including interference that may cause undesired operation.

(CANADA)
This device complies with RSS-210 of Industry CANADA. Operation is subject to the following two conditions: (1) this device may not cause interference, and (2) this device must accept any interference, including interference that may cause undesired operation of the device.

(MEXICO)
Este equipo opera a titulo secundario, consecuentemente, debe aceptar interferencias perjudiciales incluyendo equipos de la misma clase y puede no causar interferencias a sistemas operando a titulo primario

Sistema inmovilizador
Modelo : IMB111-02
Sistema inmovilizador con marcado de confirmación por radio

COFETEL RCPMAIM05-614

Sistema inmovilizador
Modelo : IMB111-03
Sistema inmovilizador con marcado de confirmación por radio

COFETEL RCPMAIM05-935

UAE :「Approved by TRA」

▼Operation

Arming

The system is armed when the ignition is switched from ON to ACC or OFF.
The security indicator light in the instrument cluster flashes every two seconds until the system is disarmed.

Disarming

The system is disarmed when the ignition is switched ON with the correct ignition key.
The security indicator light illuminates for about three seconds and goes out.

If the engine does not start with the correct ignition key, and the security indicator light keeps illuminating or flashing, the system may have a malfunction. Consult an Authorized Mazda Dealer.

NOTE

- *If the security indicator light illuminates and stays on or flashes when the ignition is switched ON, the engine will not start.*
- *Signals from a TV or radio station, or from a transceiver or a mobile telephone, could interfere with your immobilizer system. If you are using the proper key and your engine fails to start, check the security indicator light. If it is flashing, remove the ignition key and wait 2 seconds or more, then reinsert it and try starting the engine again. If it does not start after 3 or more tries, contact an Authorized Mazda Dealer.*
- *If the security indicator light flashes continuously while you are driving, do not shut off the engine. Go to an Authorized Mazda Dealer and have it checked. If you shut off the engine while the light is flashing you will not be able to restart it.*
- *Since the electronic codes are reset when repairing the immobilizer system, the keys are needed. Bring all the existing keys to an Authorized Mazda Dealer.*

▼Modification and Add-On Equipment

Mazda cannot guarantee the immobilizer system's operation if the system has been modified or if any add-on equipment has been installed.

⚠ CAUTION

To avoid damage to your vehicle, do not modify the system or install any add-on equipment to the immobilizer system or the vehicle.

Theft-Deterrent System*

If the theft deterrent system detects an inappropriate entry into the vehicle, which could result in the vehicle or its contents being stolen, the alarm alerts the surrounding area of an abnormality by sounding the horn and flashing the hazard warning lights.
Refer to Operation on page 3-71.

NOTE

- *The theft-deterrent system operates with the key or the keyless entry system transmitter.*
- ***(With advanced key)***
  The theft-deterrent system can also be operated using the advanced keyless function.
  The system operates only when the driver is in the vehicle or within operational range while the advanced key is being carried.
- *The system will not function unless it is properly armed. To properly secure the vehicle, always make sure both windows are completely closed and both doors and the trunk lid are locked before leaving the vehicle. Remember to take your key and transmitter.*

▼Operation

System triggering conditions

The horn sounds intermittently and the hazard warning lights flash for about 25 seconds when the system is triggered by any one of the following:

- Forcing open a door, the hood or the trunk lid.
- Unlocking a door with the door lock switch.
- Opening a door by operating an inside door-lock knob.
- Opening the hood by operating the hood release handle.
- Opening the trunk lid by operating the trunk lid release button.

If the system is triggered again, the lights and horn will activate until a door is unlocked or the trunk lid is opened with the key or with the transmitter.
(With advanced key)
The lights and horn can also be deactivated by pressing the request switch.

NOTE
If the battery goes dead while the theft-deterrent system is armed, the horn will activate and the hazard warning lights will flash when the battery is charged or replaced.

▼How to Arm the System

1. Close the windows securely.
2. Remove the key from the ignition switch.
   (With advanced key)
   Switch the ignition off with the start knob.
3. Make sure all windows, the hood and the trunk lid are closed. Close and lock both doors from the outside using the key. If you have the keyless entry system, press the lock button on the transmitter.
   The hazard warning lights will flash once to indicate that the system is armed.
   The following method will also arm the theft-deterrent system:
   (With advanced key)
   Press a request switch on the doors or the lock button on the transmitter.
   (Without advanced key)
   Close the hood and the trunk lid. Press the area on the door-lock switch marked “LOCK” once. Close both doors.

*Some models.

NOTE
Locking the doors with the inside door-lock knob will not arm the system.

▼To Turn off an Armed System

An armed system can be turned off by any one of the following methods:
- Unlock a door with the key.
- Press the unlock button on the keyless entry system transmitter.
- Insert the key into the ignition switch and switch the ignition ON.
- **(With advanced key)**
  - Press a request switch on the doors or the unlock button on the transmitter.
  - Switch the ignition ON with the start knob.

The hazard warning lights will flash twice to indicate that the system is turned off.

NOTE
The trunk lid can be opened with the key or the transmitter even when the system is armed. The alarm will not come on and the system will remain armed.

▼To Stop an Alarm

A triggered alarm can be turned off by any one of the following methods:
- Unlock a door with the key.
- Open the trunk lid with the key.
- Press the unlock button or press and hold the trunk button on the keyless entry system transmitter.
- **(With advanced key)**
  - Press a request switch on the doors.
  - Press the unlock button or press and hold the trunk button on the transmitter.

NOTE
If you have any problem with the theft-deterrent system, consult an Authorized Mazda Dealer.

▼Theft-Deterrent Labels

A label indicating that your vehicle is equipped with a Theft-Deterrent System is in the glove compartment.

Mazda recommends that you affix it to the lower rear corner of a front door window.

Steering Wheel

WARNING

Never adjust the steering wheel while the vehicle is moving:

Adjusting the steering wheel while the vehicle is moving is dangerous. Moving it can very easily cause the driver to abruptly turn to the left or right. This can lead to loss of control or an accident.

▼Tilt Steering Wheel

To change the angle of the steering wheel, stop the vehicle, pull the tilt wheel release lever under the steering column down, adjust the wheel, then push the release lever up to lock the column.

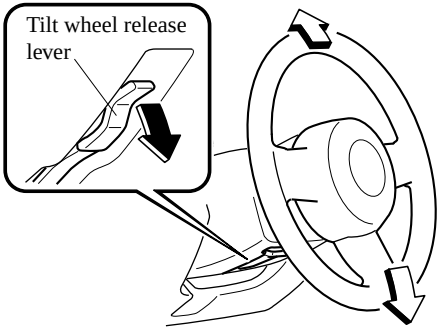

After adjusting, push the wheel up and down to be certain it's locked before driving.

Mirrors

▼Outside Mirrors

Check the mirror angles before driving.

Mirror type

Flat type (driver's side)
Flat surface mirror.
Convex type (passenger side)
The mirror has single curvature on its surface.

WARNING

Be sure to look over your shoulder before changing lanes:

Changing lanes without taking into account the actual distance of the vehicle in the convex mirror is dangerous. You could have a serious accident. What you see in the convex mirror is closer than it appears.

Power mirror

The ignition must be switched to ACC or ON.

To adjust:

1. Press the left or right side of the selector switch to choose the left or right side mirror.

2. Depress the mirror switch in the appropriate direction.

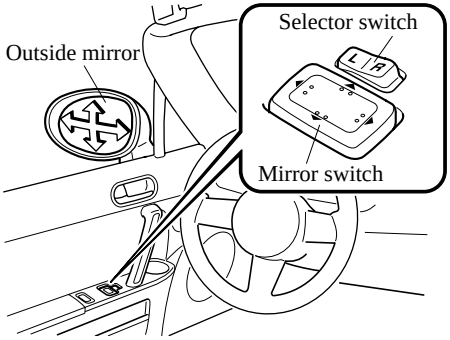

After adjusting the mirror, lock the control by placing the selector switch in the center position.

Folding the mirror

Fold the outside mirror rearward until it is flush with the vehicle.

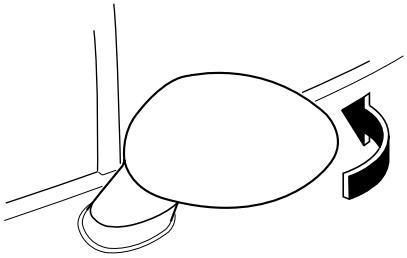

WARNING

Always return the outside mirrors to the driving position before you start driving:

Driving with the outside mirrors folded in is dangerous. Your rear view will be restricted, and you could have an accident.

▼Rearview Mirror

WARNING

Do not stack cargo or objects higher than the seatbacks:

Cargo stacked higher than the seatbacks is dangerous. It can block your view in the rearview mirror, which might cause you to hit another car when changing lanes.

Rearview mirror adjustment

Before driving, adjust the rearview mirror to center on the scene through the rear window.

Manual day/night mirror

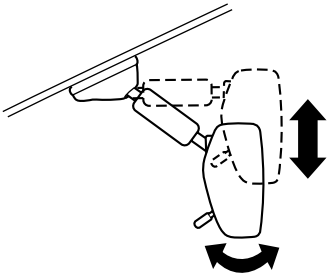

Auto-dimming mirror

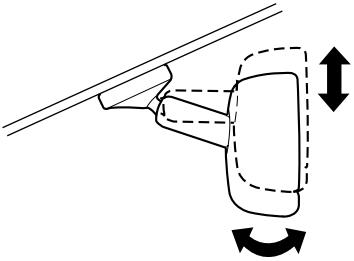

NOTE
For the manual day/night mirror, perform the adjustment with the day/night lever in the day position.

Reducing glare from headlights

Manual day/night mirror

Push the day/night lever forward for day driving. Pull it back to reduce glare of headlights from cars at the rear.

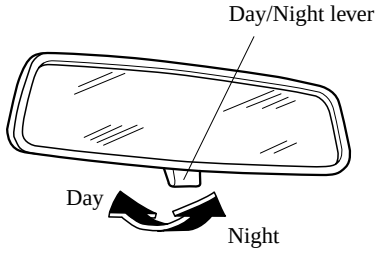

Auto-dimming mirror

The auto-dimming mirror automatically reduces glare of headlights from cars at the rear when the ignition is switched ON.

Press the OFF button (○) to cancel the automatic dimming function. The indicator light will turn off.
To reactivate the automatic dimming function, press the ON button (I). The indicator light will illuminate.

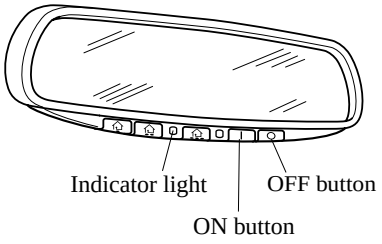

NOTE

- *Do not use glass cleaner or suspend objects on or around the light sensor. Otherwise, light sensor sensitivity will be affected and may not operate normally.*

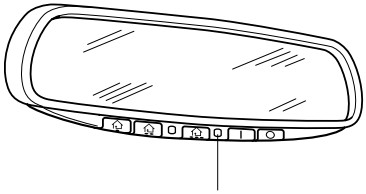

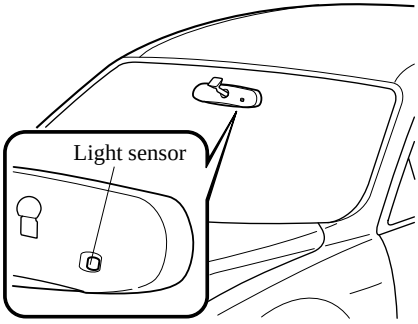

- *For information regarding the 3 buttons (, ,) on the auto-dimming mirror, refer to HomeLink Wireless Control System (page 5-63).*

4 Before Driving Your Mazda

Important information about driving your Mazda.

Fuel and Engine Exhaust Precautions 4-2
Fuel Requirements 4-2
Emission Control System 4-3
Engine Exhaust (Carbon Monoxide) 4-4

Before Starting the Engine 4-5
Before Getting In 4-5
After Getting In 4-5

Driving Tips 4-6
Break-In Period 4-6
Money-Saving Suggestions 4-6
Hazardous Driving 4-7
Floor Mat 4-8
Rocking the Vehicle 4-8
Winter Driving 4-9
Driving In Flooded Area 4-10
Overloading 4-11
Driving on Uneven Road 4-12

Towing 4-13
Trailer Towing 4-13

Fuel Requirements

Vehicles with catalytic converters or oxygen sensors must use ONLY UNLEADED FUEL, which will reduce exhaust emissions and keep spark plug fouling to a minimum.

Your Mazda will perform best with fuel listed in the table.

Fuel	Octane Rating* (Anti-knock index)
Premium unleaded fuel	91 [(R+M)/2 method] or above (96 RON or above)

* U.S. federal law requires that octane ratings be posted on gasoline station pumps.

You may use a regular unleaded fuel with an Octane Rating from 87 to 90 (91 to 95 RON) but this will slightly reduce performance, such as reduced engine output, and engine knocking.
Fuel with a rating lower than 87 octane (91 RON) could cause the emission control system to lose effectiveness. It could also cause engine knocking and serious engine damage.

⚠ CAUTION

- *USE ONLY UNLEADED FUEL.*
  Leaded fuel is harmful to the catalytic converter and oxygen sensors and will lead to deterioration of the emission control system and or failures.
- *Your vehicle can only use oxygenated fuels containing no more than 10 % ethanol by volume. Damage to your vehicle may occur when ethanol exceeds this recommendation, or if the gasoline contains any methanol. Stop using gasohol of any kind if your vehicle engine is performing poorly.*
- *Never add fuel system additives. Never add cleaning agents other than those specified by Mazda. Other cleaning agents and additives may damage the system. Consult an Authorized Mazda Dealer.*

Gasoline blended with oxygenates such as alcohol or ether compounds are generally referred to as oxygenated fuels. The common gasoline blend that can be used with your vehicle is ethanol blended at no more than 10%. Gasoline containing alcohol, such as ethanol or methanol, may be marketed under the name “Gasohol”.

Vehicle damage and drivability problems resulting from the use of the following may not be covered by the Mazda warranty.
- Gasohol containing more than 10% ethanol.
- Gasoline or gasohol containing methanol.
- Leaded fuel or leaded gasohol.

Emission Control System

Your vehicle is equipped with an emission control system (the catalytic converter is part of this system) that enables your vehicle to comply with existing exhaust emissions requirements.

WARNING

Never park over or near anything flammable:

Parking over or near anything flammable, such as dry grass, is dangerous. Even with the engine turned off, the exhaust system remains very hot after normal use and could ignite anything flammable. A resulting fire could cause serious injury or death.

CAUTION

Ignoring the following precautions could cause lead to accumulate on the catalyst inside the converter or cause the converter to get very hot. Either condition will damage the converter and cause poor performance.

- *USE ONLY UNLEADED FUEL.*
- *Do not drive your Mazda with any sign of engine malfunction.*
- *Do not coast with the ignition switch turned off.*
- *Do not descend steep grades in gear with the ignition switch turned off.*
- *Do not operate the engine at high idle for more than 2 minutes.*
- *Do not tamper with the emission control system. All inspections and adjustments must be made by a qualified technician.*
- *Do not push-start or pull-start your vehicle.*

NOTE

Under U.S. federal law, any modification to the original-equipment emission control system before the first sale and registration of a vehicle is subject to penalties. In some states, such modification made on a used vehicle is also subject to penalties.

NOTE

While the engine is off, the sound of a valve opening and closing can be heard below the trunk, however this does not indicate an abnormality. Your vehicle has a self-checking device and it operates while the engine is off.

Engine Exhaust (Carbon Monoxide)

WARNING

Do not drive your vehicle if you smell exhaust gas inside the vehicle:

Engine exhaust gas is dangerous. This gas contains carbon monoxide (CO), which is colorless, odorless, and poisonous. When inhaled, it can cause loss of consciousness and death. If you smell exhaust gas inside your vehicle, keep all windows fully open and contact an Authorized Mazda Dealer immediately.

Do not run the engine when inside an enclosed area:

Running the engine inside an enclosed area, such as a garage, is dangerous. Exhaust gas, which contains poisonous carbon monoxide, could easily enter the cabin. Loss of consciousness or even death could occur.

Open the windows or adjust the heating or cooling system to draw fresh air when idling the engine:

Exhaust gas is dangerous. When your vehicle is stopped with the windows closed and the engine running for a long time even in an open area, exhaust gas, which contains poisonous carbon monoxide, could enter the cabin. Loss of consciousness or even death could occur.

Clear snow from underneath and around your vehicle, particularly the tail pipe, before starting the engine:

Running the engine when a vehicle is stopped in deep snow is dangerous. The exhaust pipe could be blocked by the snow, allowing exhaust gas to enter the cabin. Because exhaust gas contains poisonous carbon monoxide, it could cause loss of consciousness or even death to occupants in the cabin.

Before Getting In

- Be sure the windows, outside mirrors, and outside lights are clean.
- Inspect inflation pressures and condition of tires.
- Look under the vehicle for any sign of fluid leaks.
- If you plan to back up, make sure nothing is in your way.

NOTE

Engine oil, engine coolant, brake/clutch fluid, washer fluid, and other fluid levels should be inspected. See Maintenance, Section 8.

After Getting In

- Are all doors closed and locked?
- Is the seat adjusted properly?
- Are the inside and outside mirrors adjusted?
- Is the steering wheel adjusted properly?
- Is each occupant's seat belt fastened?
- Check all gauges.
- Check all warning lights when the ignition switch is turned to the ON position.
- Release the parking brake and make sure the brake warning light goes off.

Always be thoroughly familiar with your Mazda.

Break-In Period

No special break-in is necessary, but a few precautions in the first 1,000 km (600 miles) may add to the performance, economy, and life of your Mazda.

- Do not race the engine.
- Do not maintain one constant speed, either slow or fast, for a long period of time.
- Do not drive constantly at full-throttle or high engine rpm for extended periods of time.
- Avoid unnecessary hard stops.
- Avoid full-throttle starts.

Money-Saving Suggestions

How you operate your Mazda determines how far it will travel on a tank of fuel. Use these suggestions to help save money on fuel and repairs.

- Avoid long warm-ups. Once the engine runs smoothly, begin driving.
- Avoid fast starts.
- Keep the engine tuned. Follow the maintenance schedule (page 8-3) and have an Authorized Mazda Dealer perform inspections and servicing.
- Use the air conditioner only when necessary.
- Slow down on rough roads.
- Keep the tires properly inflated.
- Do not carry unnecessary weight.
- Do not rest your foot on the brake pedal while driving.
- Keep the wheels in correct alignment.
- Keep windows closed at high speeds.
- Slow down when driving in crosswinds and headwinds.

⚠ WARNING

Never stop the engine when going down a hill:

Stopping the engine when going down a hill is dangerous. This causes the loss of power steering and power brake control, and may cause damage to the drivetrain. Any loss of steering or braking control could cause an accident.

Hazardous Driving

WARNING

Be extremely careful if it is necessary to downshift on slippery surfaces:

Downshifting into lower gear while driving on slippery surfaces is dangerous. The sudden change in tire speed could cause the tires to skid. This could lead to loss of vehicle control and an accident.

Do not rely on ABS as a substitute for safe driving:

The ABS cannot compensate for unsafe and reckless driving, excessive speed, tailgating (following another vehicle too closely), driving on ice and snow, and hydroplaning (reduced tire friction and road contact because of water on the road surface). You can still have an accident.

When driving on ice or in water, snow, mud, sand, or similar hazard:

- Be cautious and allow extra distance for braking.
- Avoid sudden braking and quick steering.
- If your vehicle is not equipped with ABS, brake with the pedal by using a light up-down motion. Do not hold the pedal down constantly.
  If your vehicle is equipped with ABS, do not pump the brakes. Continue to press down on the brake pedal.
- If you get stuck, select a lower gear and accelerate slowly. Do not spin the rear wheels.
- For more traction in starting on slippery surfaces such as ice or packed snow, use sand, rock salt, chains, carpeting, or other nonslip material under the rear wheels.

NOTE

Use snow chains only on the rear wheels.

Floor Mat

WARNING

Make sure the floor mats are hooked on the retention pins to prevent them from bunching up under the foot pedals:

Using a floor mat that is not secured is dangerous as it will interfere with the accelerator and brake pedal operation, which could result in an accident.

Do not install two floor mats, one on top of the other, on the driver's side:

Installing two floor mats, one on top of the other, on the driver's side is dangerous as the retention pins can only keep one floor mat from sliding forward.
In using a heavy duty floor mat for winter use always remove the original floor mat.
Loose floor mat(s) will interfere with the foot pedal and could result in an accident.

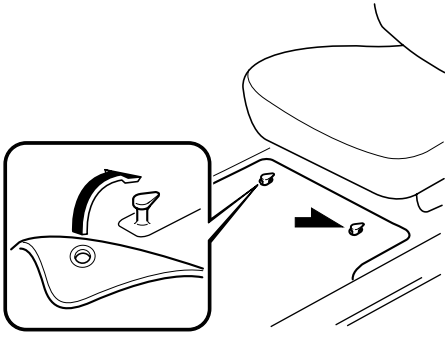

When setting a floor mat, position the floor mat so that its eyelets are inserted over the pointed end of the retention posts.

Rocking the Vehicle

WARNING

Do not spin the wheels at more than 56 km/h (35 mph), and do not allow anyone to stand behind a wheel when pushing the vehicle:

When the vehicle is stuck, spinning the wheels at high speed is dangerous. The spinning tire could overheat and explode. This could cause serious injuries.

CAUTION

Too much rocking may cause engine overheating, transmission failure, and tire damage.

If you must rock the vehicle to free it from snow, sand or mud, depress the accelerator slightly and slowly move the shift lever from 1 (D) to R.

Winter Driving

- Carry emergency gear, including tire chains, window scraper, flares, a small shovel, jumper cables, and a small bag of sand or salt.

Ask an Authorized Mazda Dealer to perform the following precautions:

- Have the proper ratio of antifreeze in the radiator.
  Refer to Engine Coolant on page 8-20.
- Inspect the battery and its cables. Cold reduces battery capacity.
- Inspect the ignition system for damage and loose connections.
- Use washer fluid made with antifreeze but do not use engine coolant antifreeze for washer fluid (page 8-23).
- Do not use the parking brake in freezing weather as it may freeze. Instead, shift to P with an automatic transmission and to 1 or R with a manual transmission. Block the rear wheels.
- Do not apply excessive force to a window scraper when removing ice or frozen snow on the mirror glass and windshield.
- Never use warm or hot water for removing snow or ice from windows and mirrors as it could result in the glass cracking.
- Braking performance can be adversely affected if snow or ice adheres to the brake equipment. If this situation occurs, drive the vehicle slowly, releasing the accelerator pedal and lightly applying the brakes several times until the brake performance returns to normal.

▼Snow Tires

Use snow tires on all four wheels

Do not go faster than 120 km/h (75 mph) while driving with snow tires. Inflate snow tires 30 kPa (0.3 kgf/cm^2, 4.3 psi) more than recommended on the tire pressure label (driver's door frame), but never more than the maximum cold-tire pressure shown on the tires.
Your vehicle is originally equipped with summer tires designed for optimum traction on wet and dry roads. If your vehicle is to be used on snow and ice covered roads, Mazda recommends that you replace the tires originally equipped on your vehicle with snow tires during the winter months.

⚠ WARNING

Use only the same size and type tires (snow, radial, or non-radial) on all four wheels:

Using tires different in size or type is dangerous. Your vehicle's handling could be greatly affected and result in an accident.

⚠ CAUTION

Check local regulations before using studded tires.

NOTE

If your vehicle is equipped with the tire pressure monitoring system, the system may not function correctly when using tires with steel wire reinforcement in the sidewalls (page 5-34).

▼Tire Chains

Check local regulations before using tire chains.

⚠ CAUTION

- *Chains may affect handling.*
- *Do not go faster than 50 km/h (30 mph) or the chain manufacturer's recommended limit, whichever is lower.*
- *Drive carefully and avoid bumps, holes, and sharp turns.*
- *Avoid locked-wheel braking.*
- *Do not use chains on roads that are free of snow or ice. The tires and chains could be damaged.*
- *Chains may scratch or chip aluminum wheels.*

NOTE
If your vehicle is equipped with the tire pressure monitoring system, the system may not function correctly when using tire chains.

Install the chains on the rear tires.
Do not use chains on the front tires.
Please consult an Authorized Mazda Dealer.

Installing the chains

1. Secure the chains on the rear tires as tightly as possible. Always follow the chain manufacturer's instructions.
2. Retighten the chains after driving 1/2 1 km (1/4 1/2 mile).

Driving In Flooded Area

⚠ WARNING

Dry wet brakes by driving very slowly and applying the brakes lightly until brake performance returns to normal:
Driving with wet brakes is dangerous. Increased stopping distance or the vehicle pulling to one side when braking could result in a serious accident. Light braking will indicate whether the brakes have been affected.

⚠ CAUTION

Do not drive the vehicle on flooded roads as it could cause short circuiting of electrical/electronic parts, or engine damage or stalling from water absorption. If the vehicle has been immersed in water, consult an Authorized Mazda Dealer.

Overloading

WARNING

Be careful not to overload your vehicle:
The gross axle weight rating (GAWR) and the gross vehicle weight rating (GVWR) of your vehicle are on the Motor Vehicle Safety Standard Label on the driver's door frame. Exceeding these ratings can cause an accident or vehicle damage. You can estimate the weight of your load by weighing the items (or people) before putting them in the vehicle.

Driving on Uneven Road

Your vehicle's suspension and underbody can be damaged if driven on rough/uneven roads or over speed bumps at excessive speeds. Use care and reduce speed when traveling on rough/uneven roads or over speed bumps.

Use care not to damage the vehicle's underbody, bumpers or muffler(s) when driving under the following conditions:

- Ascending or descending a slope with a sharp transition angle
- Ascending or descending a driveway or trailer ramp with a sharp transition angle

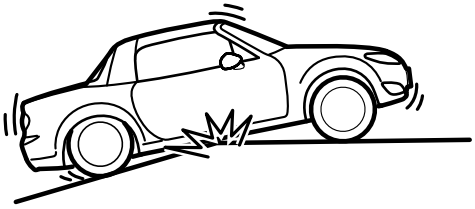

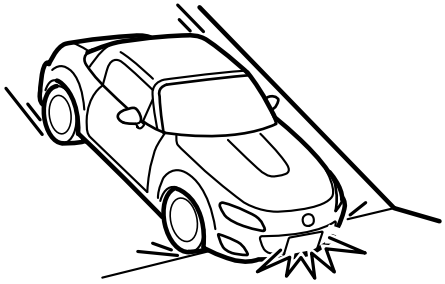

Your vehicle is equipped with low profile tires allowing class-leading performance and handling. As a result, the sidewall of the tires are very thin and the tires and wheels can be damaged if driven through potholes or on rough/uneven roads at excessive speeds. Use care and reduce speed when traveling on rough/uneven roads or through potholes.

Trailer Towing

The Mazda MX-5 is not designed for towing. Never tow a trailer with your Mazda MX-5.

5 Driving Your Mazda

Explanation of instruments and controls.

Starting and Driving 5-2
Ignition Switch 5-2
Starting the Engine 5-4
Turning the Engine Off 5-5
Brake System 5-6
Manual Transmission Operation 5-11
Automatic Transmission Controls 5-14
Power Steering 5-22
Cruise Control* 5-22
Traction Control System (TCS)* 5-26
Dynamic Stability Control (DSC)* 5-27
Tire Pressure Monitoring System* 5-30

Instrument Cluster and Indicators 5-37
Meters and Gauges 5-37

Warning/Indicator Lights and Beep Sounds 5-42
Warning/Indicator Lights 5-42
Beep Sounds 5-55

Switches and Controls 5-57
Lighting Control 5-57
Turn and Lane-Change Signals 5-59
Fog Lights* 5-59
Windshield Wipers and Washer 5-60
Rear Window Defroster 5-61
Horn 5-62
Hazard Warning Flasher 5-62
HomeLink Wireless Control System* 5-63

*Some models.

Ignition Switch

Auxiliary key (with advanced key)

NOTE
When starting the engine using the advanced key, refer to Starting the Engine (page 3-11).

When starting the engine with the auxiliary key, perform the following procedure.

1. Remove the auxiliary key from the advanced key (page 3-18).
2. Make sure the start knob is in OFF/ LOCK position.
3. Remove the start knob by pulling it outward while pressing the buttons on both the left and right sides.

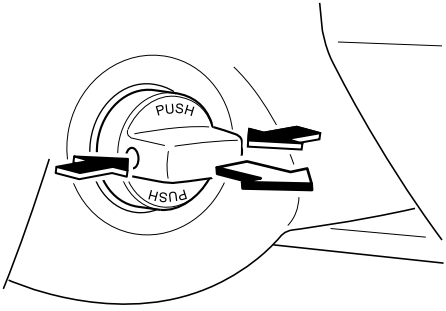

4. Insert the auxiliary key in the ignition switch.

▼Ignition Switch Positions

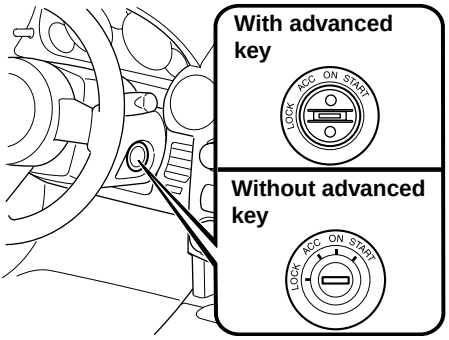

The engraved mark (LOCK) indicated in the illustration may differ from that indicated on the actual vehicle (it may read OFF).

OFF/LOCK

The power supply to electrical devices is turned off. Only in this position can the key be removed.

Manual Transmission Vehicle

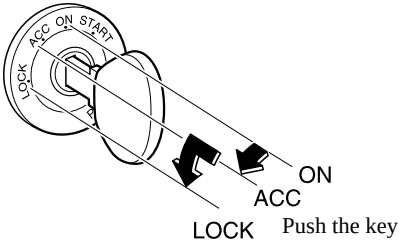

Automatic Transmission Vehicle

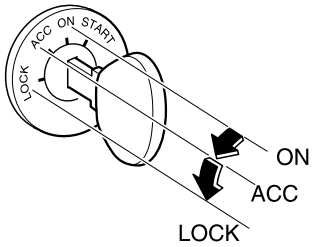

WARNING

Remove the key only when the vehicle is parked (with steering lock mechanism):

Removing the key from the ignition switch while the vehicle is moving is dangerous. Removing the key allows the steering wheel to lock. You will lose steering control and a serious accident could occur. (For vehicles equipped with the advanced key, the steering wheel locks when the starter knob is turned to the OFF/LOCK position.)

Before leaving the driver's seat, always switch the ignition to OFF/LOCK, set the parking brake and make sure the shift lever is in P with an automatic transmission or in 1 or R with a manual transmission:

It is important to switch the ignition to OFF/LOCK even if you are not removing the key from the ignition or leaving the vehicle. Leaving the key in other positions will disable some of the vehicle security systems and run the battery down.
Leaving the driver's seat without switching the ignition to OFF/LOCK, setting the parking brake and shifting the shift lever to P with an automatic transmission, or to 1 or R with a manual transmission is dangerous. Unexpected vehicle movement could occur. This could cause an accident.

NOTE
If turning the key is difficult, jiggle the steering wheel from side to side.
Leaving the key or start knob in any position but the OFF/LOCK position also disables some of the security features and may run the battery down.

ACC (Accessory)

In this position, some electrical accessories will operate.

ON

This is the normal running position after the engine is started. Some indicator lights/warning lights should be inspected before the engine is started (page 5-42).

NOTE
When the ignition is switched ON, the sound of the fuel pump motor operating near the fuel tank can be heard. This does not indicate an abnormality.

START

The engine is started in this position. It will crank until you release the key. It then returns to the ON position.

▼Ignition Key Reminder

If the ignition is switched off or the ignition is switched to ACC with the key inserted, a continuous beep sound will be heard when the driver's door is opened.

Starting the Engine

NOTE
Engine-starting is controlled by the spark ignition system.
This system meets all Canadian Interference-Causing Equipment Standard requirements regulating the impulse electrical field strength of radio noise.

1. Occupants should fasten their seat belts.
2. Make sure the parking brake is on.
3. Depress the brake pedal.
4. **(Manual transmission)**
   Depress the clutch pedal all the way and shift into neutral.
   Keep the clutch pedal depressed while cranking the engine.
   (Automatic transmission)
   Put the vehicle in park (P). If you must restart the engine while the vehicle is moving, shift into neutral (N).

NOTE
(Manual transmission)
The starter will not operate unless the clutch is depressed sufficiently.
(Automatic transmission)
The starter will not operate if the shift lever is ***not*** *in P or N.*

5. Switch the ignition to START and hold (up to 10 seconds at a time) until the engine starts.

⚠ CAUTION

Do not try the starter for more than 10 seconds at a time. If the engine stalls or fails to start, wait 10 seconds before trying again. Otherwise, you may damage the starter and drain the battery.

6. After starting the engine, let it idle for about 10 seconds.

NOTE

- *In extremely cold weather or after the vehicle has not been driven in several days, let the engine warm up without operating the accelerator.*
- *Whether the engine is cold or warm, it should be started without use of the accelerator.*
- *If the engine does not start the first time, refer to Starting a Flooded Engine under Emergency Starting. If the engine still does not start, have your vehicle inspected by an Authorized Mazda Dealer (page 7-20).*

Turning the Engine Off

1. Stop the vehicle completely.
2. **(Manual transmission)**
   Shift into neutral.
   (Automatic transmission)
   Shift the shift lever to the P position.
3. Switch the ignition from ON to OFF/LOCK.

⚠ WARNING

Do not stop the engine while the vehicle is moving:

Stopping the engine while the vehicle is moving for any reason other than in an emergency is dangerous. Stopping the engine while the vehicle is moving will result in reduced maneuverability and braking ability due to the loss of power steering and power braking, which could cause an accident and serious injury.

⚠ CAUTION

When leaving the vehicle, make sure the ignition is switched off.

NOTE

The electrical fan in the engine compartment could turn on for a few minutes after the ignition is switched from ON to OFF, whether or not the A/C is on or off, to cool the engine compartment quickly.

Brake System

▼Foot Brake

Your Mazda has power-assisted brakes that adjust automatically through normal use.

Should power-assist fail, you can stop by applying greater force than normal to the brake pedal. But the distance required to stop will be greater than usual.

⚠ WARNING

Do not coast with the engine stalled or turned off, find a safe place to stop:

Coasting with the engine stalled or turned off is dangerous. Braking will require more effort, and the brake's power-assist could be depleted if you pump the brake. This will cause longer stopping distances or even an accident.

Shift to a lower gear when going down steep hills:

Driving with your foot continuously on the brake pedal or steadily applying the brakes for long distances is dangerous. This causes overheated brakes, resulting in longer stopping distances or even total brake failure. This could cause loss of vehicle control and a serious accident. Avoid continuous application of the brakes.

Dry off brakes that have become wet by driving slowly, releasing the accelerator pedal and lightly applying the brakes several times until the brake performance returns to normal:

Driving with wet brakes is dangerous. Increased stopping distance or the vehicle pulling to one side when braking could result in a serious accident. Light braking will indicate whether the brakes have been affected.

⚠ CAUTION

- *Do not drive with your foot held on the clutch pedal or brake pedal, or hold the clutch pedal depressed halfway unnecessarily. Doing so could result in the following:*
  - *The clutch and brake parts will wear out more quickly.*
  - *The brakes can overheat and adversely affect brake performance.*
- *Always depress the brake pedal with the right foot. Applying the brakes with the unaccustomed left foot could slow your reaction time to an emergency situation resulting in insufficient braking operation.*

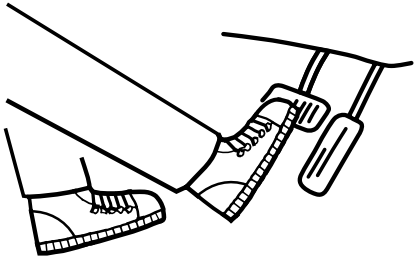

- *Wear shoes appropriate for driving in order to avoid your shoe contacting the brake pedal when depressing the accelerator pedal.*

▼Parking Brake

⚠ WARNING

Before leaving the driver's seat, always switch the ignition to OFF/LOCK, set the parking brake and make sure the shift lever is in P with an automatic transmission or in 1 or R with a manual transmission:

It is important to switch the ignition to OFF/LOCK even if you are not removing the key from the ignition or leaving the vehicle. Leaving the key in other positions will disable some of the vehicle security systems and run the battery down.
Leaving the driver's seat without switching the ignition to OFF/LOCK, setting the parking brake and shifting the shift lever to P with an automatic transmission, or to 1 or R with a manual transmission is dangerous. Unexpected vehicle movement could occur. This could cause an accident.

⚠ CAUTION

Driving with the parking brake on will cause excessive wear of the brake linings or pads.

NOTE

For parking in snow, refer to Winter Driving (page 4-9) regarding parking brake use.

Setting the parking brake

Depress the brake pedal and then firmly pull the parking brake lever fully upwards with sufficient force to hold the vehicle in a stationary position.

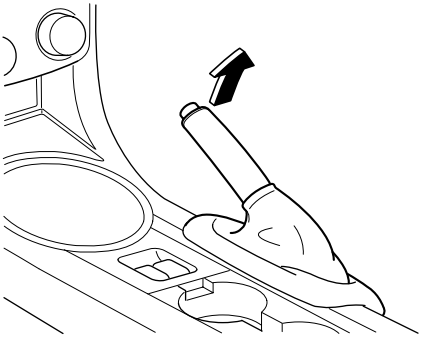

Releasing the parking brake

Depress the brake pedal and pull the parking brake lever upwards, then press the release button. While holding the button, lower the parking brake lever all the way down to the released position.

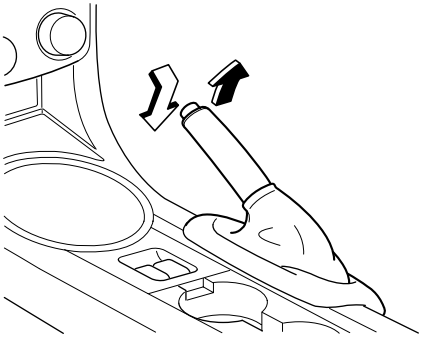

▼Brake System Warning Light

This warning has the following functions:

Brake system warning

Illuminates when there is a malfunction in the brake switch.

Parking brake warning

The light illuminates when the parking brake is applied with the ignition switched to START or ON. It turns off when the parking brake is fully released.

Low brake fluid level warning

If the light stays on after the parking brake is fully released, you may have a brake problem.

Drive to the side of the road and park off the right-of-way.

You may notice that the pedal is harder to depress or that it may go closer to the floor. In either case, it will take longer to stop the vehicle.

1. With the engine stopped, open the hood and check the brake fluid level immediately, and then add fluid if required (page 8-22).
2. After adding fluid, check the light again.

If the warning light remains on, or if the brakes do not operate properly, do not drive the vehicle. Have it towed to an Authorized Mazda Dealer.

Even if the light turns off have your brake system inspected as soon as possible by an Authorized Mazda Dealer.

NOTE

Having to add brake fluid is sometimes an indicator of leakage. Consult an Authorized Mazda Dealer as soon as possible even if the brake light is no longer illuminated.

WARNING

Do not drive with the brake system warning light illuminated. Contact an Authorized Mazda Dealer to have the brakes inspected as soon as possible:

Driving with the brake system warning light illuminated is dangerous. It indicates that your brakes may not work at all or that they could completely fail at any time. If this light remains illuminated, after checking that the parking brake is fully released, have the brakes inspected immediately.

▼Anti-Lock Brake System (ABS)

The ABS control unit continuously monitors the speed of each wheel. If one is about to lock up, the ABS responds by automatically releasing and reapplying that wheel's brake.

The driver will feel a slight vibration in the brake pedal and may hear a chattering noise from the brake system. This is normal when the ABS operates. Continue to depress the brake pedal without pumping the brakes.

WARNING

Do not rely on ABS as a substitute for safe driving:

The ABS cannot compensate for unsafe and reckless driving, excessive speed, tailgating (following another vehicle too closely), driving on ice and snow, and hydroplaning (reduced tire friction and road contact because of water on the road surface). You can still have an accident.

NOTE

- *Braking distances may be longer on loose surfaces (snow or gravel, for example) which usually have a hard foundation. A vehicle with a normal braking system may require less distance to stop under these conditions because the tires will build up a wedge of surface layer when the wheels skid.*
- *The sound of the ABS operating may be heard when starting the engine or immediately after starting the vehicle. However, it does not indicate a malfunction.*

▼ABS Warning Light

The warning light stays on for a few seconds when the ignition is switched ON.

If the ABS warning light stays on while you're driving, the ABS control unit has detected a system malfunction. If this occurs, your brakes will function normally as if the vehicle had no ABS.
Should this happen, consult an Authorized Mazda Dealer as soon as possible.

NOTE

- *When the engine is jump-started to charge the battery, uneven rpm occurs and the ABS warning light may illuminate. If this occurs, it is the result of the weak battery and does not indicate an ABS malfunction.*
  Recharge the battery.
- ***(With DSC vehicles)***
  The brake assist system does not operate while the ABS warning light is illuminated.

▼Electronic Brake Force Distribution System Warning

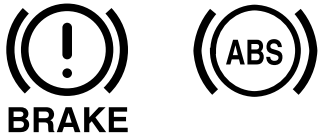

If the electronic brake force distribution control unit determines that some components are operating incorrectly, the control unit may illuminate the brake system warning light and the ABS warning light on simultaneously. The problem is likely to be the electronic brake force distribution system.

⚠ WARNING

Do not drive with both the ABS warning light and brake warning light illuminated. Have the vehicle towed to an Authorized Mazda Dealer to have the brakes inspected as soon as possible:

Driving when the brake system warning light and ABS warning light are illuminated simultaneously is dangerous.
When both lights are illuminated, the rear wheels could lock more quickly in an emergency stop than under normal circumstances.

▼Brake Assist (with DSC vehicles)

During emergency braking situations when it is necessary to depress the brake pedal with greater force, the brake assist system provides braking assistance, thus enhancing braking performance.

When the brake pedal is depressed hard or depressed more quickly, the brakes apply more firmly.

NOTE

- *When the brake pedal is depressed hard or depressed more quickly, the pedal will feel softer but the brakes will apply more firmly. This is a normal effect of the brake assist operation and does not indicate an abnormality.*
- *When the brake pedal is depressed hard or depressed more quickly, a motor/pump operation noise may be heard. This is a normal effect of the brake assist and does not indicate an abnormality.*
- *The brake assist equipment does not supersede the functionality of the vehicle's main braking system.*

▼Brake Pad Wear Indicator

When the disc brake pads become worn, the built-in wear indicators contact the disc plates. This causes a loud screeching noise to warn that the pads should be replaced.

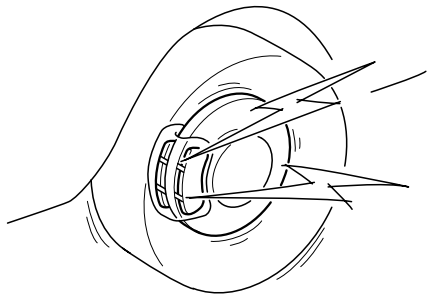

When you hear this noise, consult an Authorized Mazda Dealer as soon as possible.

⚠ WARNING

Do not drive with worn disc pads:
Driving with worn disc pads is dangerous. The brakes could fail and cause a serious accident. As soon as you hear a screeching noise consult an Authorized Mazda Dealer.

Manual Transmission Operation

▼Manual Transmission Shift Pattern

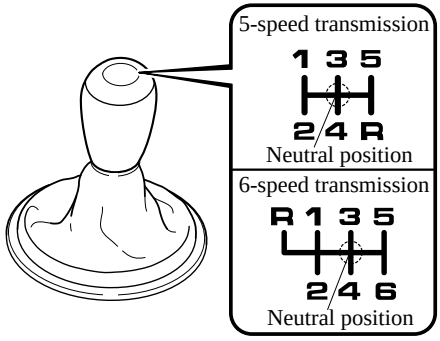

The vehicle is equipped with either a 5-speed or 6-speed manual transmission. The shift pattern for each is shown above.

Depress the clutch pedal all the way down while shifting; then release it slowly.

(5-speed transmission)
A safety feature prevents accidental shifting from 5 to R (reverse). The shift lever must be put in neutral before being shifted to R.

(6-speed transmission)
Vehicles with 6-speed transmission are equipped with a device to prevent shifting to R (reverse) by mistake. Push the shift lever downward and shift to R.

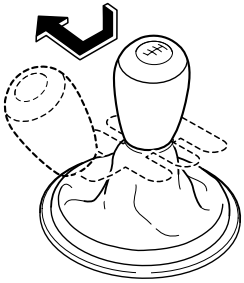

WARNING

Do not use sudden engine braking on slippery road surfaces or at high speeds:
Shifting down while driving on wet, snowy, or frozen roads, or while driving at high speeds causes sudden engine braking, which is dangerous. The sudden change in tire speed could cause the tires to skid. This could lead to loss of vehicle control and an accident.

Be sure to leave the shift lever in 1 or R position and set the parking brake when leaving the vehicle unattended:
Otherwise the vehicle could move and cause an accident.

CAUTION

- *Keep your foot off the clutch pedal except when shifting gears. Also, do not use the clutch to hold the vehicle on an upgrade. Riding the clutch will cause needless clutch wear and damage.*
- *Do not apply any excessive lateral force to the gear lever when changing from 5th to 4th gear. This could lead to the accidental selection of 2nd gear, which can result in damage to the transmission.*
- *Make sure the vehicle comes to a complete stop before shifting to R. Shifting to R while the vehicle is still moving may damage the transmission.*

NOTE
If shifting to R is difficult, shift back into neutral, release the clutch pedal, and try again.

▼Recommendations for Shifting

Upshifting

For normal acceleration, we recommend these shift points.

Gear	5-speed transmission	6-speed transmission
1 to 2	24 km/h (15 mph)	23 km/h (14 mph)
2 to 3	42 km/h (26 mph)	37 km/h (23 mph)
3 to 4	55 km/h (34 mph)	50 km/h (31 mph)
4 to 5	66 km/h (41 mph)	56 km/h (35 mph)
5 to 6		66 km/h (41 mph)

For cruising

Gear	5-speed transmission	6-speed transmission
1 to 2	15 km/h (9 mph)	18 km/h (11 mph)
2 to 3	29 km/h (18 mph)	32 km/h (20 mph)
3 to 4	47 km/h (29 mph)	44 km/h (27 mph)
4 to 5	61 km/h (38 mph)	56 km/h (35 mph)
5 to 6		68 km/h (42 mph)

Downshifting

When you must slow down in heavy traffic or on a steep **upgrade**, downshift before the engine starts to overwork. This reduces the chance of stalling and gives better acceleration when you need more speed.
On a steep **downgrade**, downshifting helps maintain safe speed and prolongs brake life.

Automatic Transmission Controls

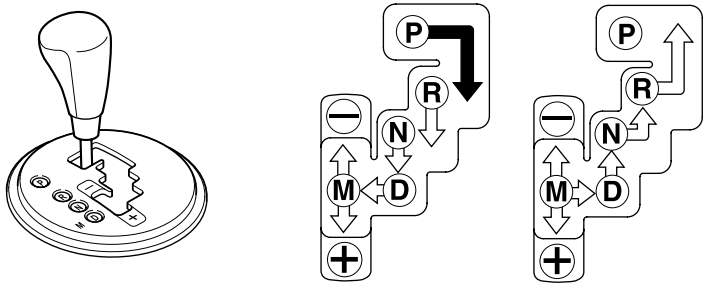

Various Lockouts:

➡ Indicates that you must depress the brake pedal to shift (The ignition switch must be in the ACC or ON position).

⇨ Indicates the shift lever can be shifted freely into any position.

NOTE

The Sport AT has an option that is not included in the traditional automatic transmission giving the driver the option of selecting each gear instead of leaving it to the transmission to shift gears. Even if you intend to use the automatic transmission functions as a traditional automatic, you should also be aware that you can inadvertently shift into manual shift mode and an inappropriate gear may be retained as the vehicle speed increases. If you notice the engine speed going higher or hear the engine racing, confirm you have not accidentally slipped into manual shift mode (page 5-16).

▼Transmission Ranges

The shift lever must be in P or N to operate the starter.

P (Park)

P locks the transmission and prevents the rear wheels from rotating.

⚠ WARNING

Always set the shift lever to P and set the parking brake:

Only setting the shift lever to the P position without using the parking brake to hold the vehicle is dangerous. If P fails to hold, the vehicle could move and cause an accident.

⚠ CAUTION

- *Shifting into P, N or R while the vehicle is moving can damage your transmission.*
- *Shifting into a driving gear or reverse when the engine is running faster than idle can damage the transmission.*

R (Reverse)

In position R, the vehicle moves only backward. You must be at a complete stop before shifting to or from R, except under rare circumstances as explained in Rocking the Vehicle (page 4-8).

N (Neutral)

In N, the wheels and transmission are not locked. The vehicle will roll freely even on the slightest incline unless the parking brake or brakes are on.

⚠ WARNING

If the engine is running faster than idle, do not shift from N or P into a driving gear:

It's dangerous to shift from N or P into a driving gear when the engine is running faster than idle. If this is done, the vehicle could move suddenly, causing an accident or serious injury.

Do not shift into N when driving the vehicle:

Shifting into N while driving is dangerous. Engine braking cannot be applied when decelerating which could lead to an accident or serious injury.

⚠ CAUTION

Do not shift into N when driving the vehicle. Doing so can cause transmission damage.

NOTE

Apply the parking brake or depress the brake pedal before moving the shift lever from N to prevent the vehicle from moving unexpectedly.

D (Drive)

D is the normal driving position. From a stop, the transmission will automatically shift through a 6-gear sequence.
Temporary use of the direct mode is possible.
Refer to Direct Mode on page 5-20.

M (Manual)

M is the manual shift mode position. Gears can be shifted up or down by operating the shift lever or steering shift switches.
Refer to Manual Shift Mode (page 5-16).

▼Active Adaptive Shift (AAS)

Active Adaptive Shift (AAS) automatically controls the transmission shift points to best suit the road conditions and driver input. This optimizes engine performance and improves driving comfort. When cornering the vehicle, AAS mode will hold the transmission in the gear the vehicle was in before entering the curve, allowing the vehicle to be accelerated from the same gear after exiting the curve.
If the driver accelerates rapidly, or accelerates and decelerates rapidly by operating the accelerator and brake pedal for a certain period of time while the selector lever is in the D position, AAS mode could activate. When this occurs, AAS mode will maintain the transmission in the optimum gear and the driver may sense that the transmission is not shifting, however this does not indicate an abnormality.

▼Shift-Lock System

The shift-lock system prevents shifting out of P unless the brake pedal is depressed.

To shift from P:

1. Depress and hold the brake pedal.
2. Start the engine.
3. Move the shift lever.

NOTE

- *When the ignition is switched off (LOCK), the shift lever cannot be shifted from P.*
- *To be sure the vehicle is in park,* ***the ignition key cannot be removed unless the shift lever is in P.***
- ***(With Advanced Key)***
  The ignition cannot be switched from ACC to OFF when the shift lever is not in P.

▼Manual Shift Mode

This mode gives you the feel of driving a manual transmission vehicle by operating the shift lever and allows you to control engine rpm and torque to the rear wheels much like a manual transmission when more control is desired.

To change to manual shift mode, shift the lever from D to M.

NOTE

Changing to manual shift mode while driving will not damage the transmission.

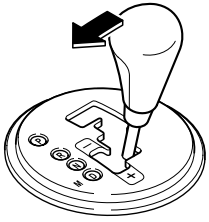

To return to automatic shift mode, shift the lever from M to D.

NOTE

- *If you change to manual shift mode when the vehicle is stopped, the gear will shift to M1.*
- *If you change to manual shift mode without depressing the accelerator pedal when driving in D range, 5th gear, the gear will shift to M4.*
- *If you change to manual shift mode without depressing the accelerator pedal when driving in D range, 6th gear, the gear will shift to M5.*

Indicators

Shift position indicator

In manual shift mode, the “M” of the shift position indicator in the instrument panel illuminates.

Gear position indicator

The numeral for the selected gear illuminates.

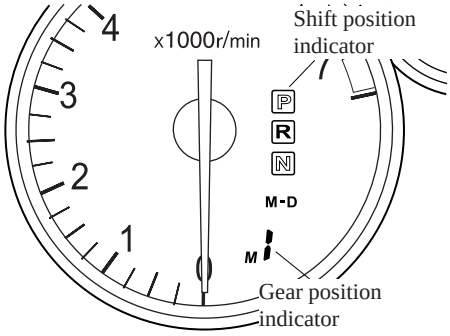

NOTE

If the gears cannot be shifted down when driving at higher speeds, the gear position indicator will flash twice to signal that the gears cannot be shifted down (to protect the transmission).

Shifting

You can shift gears up and down by operating the shift lever or the steering shift switches.

NOTE

- *If the steering shift switches on both sides (left and right) are operated simultaneously, the gear will shift once.*
- *The gear will not shift if the UP switch and DOWN switch are operated simultaneously.*

Manually Shifting up

(M1 → M2 → M3 → M4 → M5 → M6)

To shift up to a higher gear, tap the shift lever back (+) once.

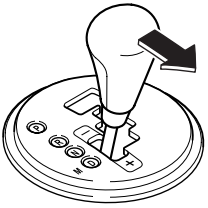

To shift up to a higher gear with the steering shift switches, tap either of the UP switches toward you once with your fingers.

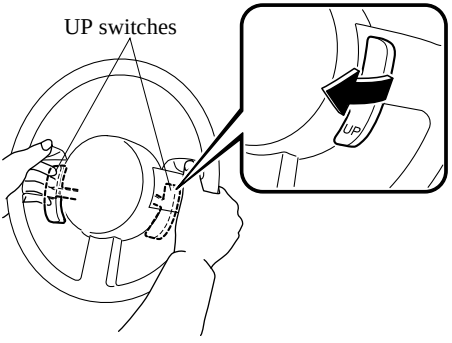

WARNING

Keep your hands on the steering wheel rim when using fingers or thumbs on the steering shift switches:

Putting your hands inside the rim of the steering wheel when using the steering shift switches is dangerous. If the driver's air bag were to deploy in a collision, your hands could be impacted causing injury.

NOTE

- *When driving slowly, the gears may not shift up.*
- *In manual shift mode, gears do not shift up automatically. Do not run the engine with the tachometer needle in the RED ZONE. If the tachometer needle enters the RED ZONE, you may feel engine-braking. However, this does not indicate an abnormality.*
- *When depressing the accelerator fully, the transmission will shift to a lower gear, depending on vehicle speed (Except M2 → M1).*

Manually Shifting down

(M6 → M5 → M4 → M3 → M2 → M1)

To shift down to a lower gear, tap the shift lever forward (**−**) once.

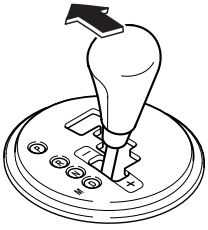

To shift down to a lower gear with the steering shift switches, press either of the DOWN switches away from you once with your thumb.

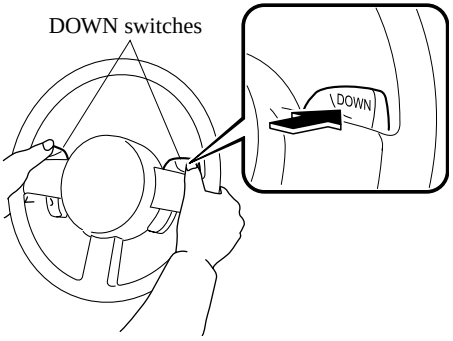

WARNING

Do not use engine braking on slippery road surfaces or at high speeds:

Shifting down while driving on wet, snowy, or frozen roads, or while driving at high speeds causes sudden engine braking, which is dangerous. The sudden change in tire speed could cause the tires to skid. This could lead to loss of vehicle control and an accident.

Keep your hands on the steering wheel rim when using fingers or thumbs on the steering shift switches:

Putting your hands inside the rim of the steering wheel when using the steering shift switches is dangerous. If the driver's air bag were to deploy in a collision, your hands could be impacted causing injury.

NOTE

- *When driving at high speeds, the gear may not shift down depending on vehicle speed.*
- *During deceleration, the gear may automatically shift down depending on vehicle speed.*
- *When depressing the accelerator fully, the transmission will shift to a lower gear, depending on vehicle speed (Except M2 → M1).*

Second gear fixed mode

When the shift lever is tapped back (+) while the vehicle is stopped, the transmission is set in the second gear fixed mode. The gear is fixed in second while in this mode for easier starting and driving on slippery roads. If the shift lever is tapped back (+) or forward (−) while in the second gear fixed mode, the mode will be canceled.

Shifting specification

Shifting up

If the vehicle speed is lower than the speed specified for each gear, the gear cannot be shifted up to a higher gear.

Gear	Vehicle speed
M1 → M2	Between 0 and 18 km/h (0 and 11 mph), depending on how much the accelerator pedal is depressed.
M2 → M3 M3 → M4	Between 22 and 32 km/h (13 and 19 mph), depending on how much the accelerator pedal is depressed.
M4 → M5	Between 40 and 48 km/h (25 and 29 mph), depending on how much the accelerator pedal is depressed.
M5 → M6	Between 50 and 68 km/h (31 and 42 mph), depending on how much the accelerator pedal is depressed.

Shifting down

If the vehicle speed is higher than the speed specified for each gear, the gear cannot be shifted to a lower gear so as to protect the transmission.

Gear	Vehicle speed
M5 → M4	164 km/h (102 mph)
M4 → M3	117 km/h (72 mph)
M3 → M2	80 km/h (49 mph)
M2 → M1	35 km/h (21 mph)

NOTE

Regarding the vehicle speed at the highest gear indicated above, achieving this speed may not actually be possible depending on various driving conditions such as the wind, upslope, and road surface.

During deceleration, the gears shift down automatically when speed is reduced to the following:

Gear	Vehicle speed
M6 → M5	47 km/h (29 mph)
M5 → M4	38 km/h (23 mph)
M4 → M3	20 km/h (12 mph)
M3 → M2	15 km/h (9 mph)
M2 → M1	12 km/h (7 mph)

NOTE

The gear does not shift down to M1 automatically while in the second gear fixed mode.

If the vehicle is kicked down at the following speeds or lower, the gears shift down automatically:

Gear	Vehicle speed
M6 → M5	190 km/h (118 mph)
M6 → M4	125 km/h (77 mph)
M5 → M4	125 km/h (77 mph)
M5 → M3	78 km/h (48 mph)
M4 → M3	78 km/h (48 mph)
M4 → M2	50 km/h (31 mph)
M3 → M2	50 km/h (31 mph)

Recommendations for shifting

Upshifting

For normal acceleration and cruising, we recommend these shift points.

Gear	Vehicle speed
M1 to M2	24 km/h (15 mph)
M2 to M3	40 km/h (25 mph)
M3 to M4	53 km/h (33 mph)
M4 to M5	59 km/h (37 mph)
M5 to M6	78 km/h (49 mph)

For cruising

Gear	Vehicle speed
M1 to M2	22 km/h (14 mph)
M2 to M3	27 km/h (17 mph)
M3 to M4	41 km/h (26 mph)
M4 to M5	56 km/h (35 mph)
M5 to M6	64 km/h (40 mph)

Downshifting

When you must slow down in heavy traffic or on a steep **upgrade**, downshift before the engine starts to overwork. This gives better acceleration when you need more speed.

On a steep **downgrade**, downshifting helps maintain safe speed and prolongs brake life.

▼Direct Mode*

Direct mode can be used for temporarily switching gears by operating the steering shift switch while the vehicle is being driven with the selector lever in the D range.
While in direct mode, the D and M indicator lights illuminate and the gear position in use is illuminated.
Direct mode is canceled (released) under the following conditions.

- The vehicle is driven at a constant speed.
- The needle in the tachometer approaches the red zone.
- The vehicle is driven at a constant speed and the accelerator pedal is heavily depressed.
- The vehicle is stopped or moving at a slow speed.

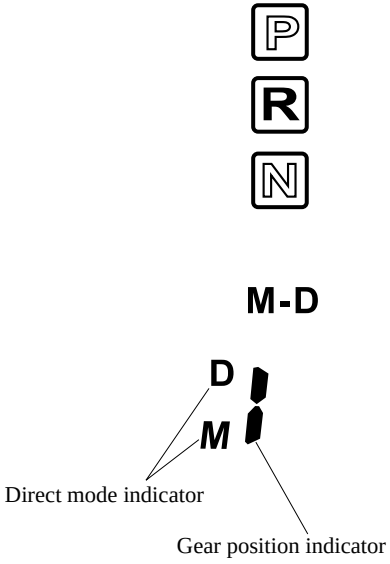

*Some models.

NOTE
Shifting up and down while in direct mode may not be possible depending on the vehicle speed. In addition, because direct mode is canceled (released) depending on the rate of acceleration or if the accelerator is fully depressed, use of the manual shift mode is recommended if you need to drive the vehicle in a particular gear for long periods.

▼Driving Tips

WARNING

Do not allow the vehicle to move in reverse on an up-slope while the selector lever is in a forward gear position, or move forward on a down-slope while the selector lever is in the reverse position.

Otherwise, the engine will stop, causing the loss of the power brake and power steering functions, and make it difficult to control the vehicle which could result in an accident.

Passing

For extra power when passing another vehicle or climbing steep grades, depress the accelerator fully. The transmission will shift to a lower gear, depending on vehicle speed.

Climbing steep grades from a stop

To climb a steep grade from a stopped position:

1. Depress the brake pedal.
2. Shift to D or M1, depending on the load weight and grade steepness.
3. Release the brake pedal while gradually accelerating.

Descending steep grades

When descending a steep grade, shift to lower gears, depending on load weight and grade steepness. Descend slowly, using the brakes only occasionally to prevent them from overheating.

Power Steering

Power steering is only operable when the engine is running. If the engine is off or if the power steering system is inoperable, you can still steer, but it requires more physical effort.

If the steering feels stiffer than usual during normal driving, consult an Authorized Mazda Dealer.

⚠ CAUTION

Never hold the steering wheel to the extreme left or right for more than 5 seconds with the engine running. This could damage the power steering system.

Cruise Control*

With cruise control, you can set and automatically maintain any speed of more than about 30 km/h (19 mph).

⚠ WARNING

Do not use the cruise control under the following conditions:

Using the cruise control under the following conditions is dangerous and could result in loss of vehicle control.

- *Hilly terrain*
- *Steep inclines*
- *Heavy or unsteady traffic*
- *Slippery or winding roads*
- *Similar restrictions that require inconsistent speed*

▼Cruise Main Indicator Light (Amber)/Cruise Set Indicator Light (Green)

CRUISE

The indicator light has two colors.

Cruise Main Indicator Light (Amber)

The indicator light illuminates amber when the ON/OFF switch is pressed and the cruise control system is activated.

Cruise Set Indicator Light (Green)

The indicator light illuminates green when a cruising speed has been set.

*Some models.

▼Activation/Deactivation

To activate the system, press the ON/OFF switch.
The cruise main indicator light illuminates.

To deactivate the system, press the switch again.
The cruise main indicator light turns off.

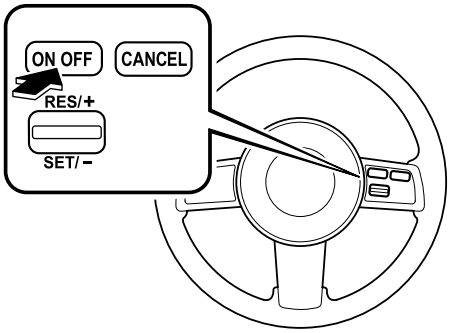

⚠ WARNING

Keep the ON/OFF switch off when cruise control is not in use:

Leaving the ON/OFF switch on when not using the cruise control is dangerous as you may hit one of the other buttons and put the vehicle in cruise control unexpectedly. This could result in loss of vehicle control.

▼To Set Speed

1. Activate the cruise control system by pressing the ON/OFF switch.
2. Accelerate to the desired speed, which must be more than 30 km/h (19 mph).
3. Press down the cruise control SET/- switch and release it at the desired speed. Release the accelerator simultaneously.

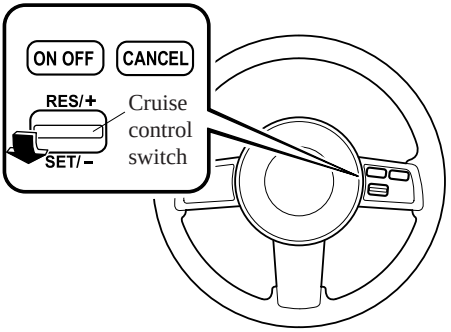

Do not continue to hold the switch. Until you release it, the speed will continue to decrease (unless you continue to accelerate) and you will miss the desired speed.

NOTE

- *On a steep grade, the vehicle may momentarily slow down while ascending, or speed up while descending.*
- *Cruise control will turn off if the vehicle speed decreases below 30 km/h (19 mph) when cruise is activated, such as when climbing a steep grade.*

▼To Increase Cruising Speed

Follow either of these procedures.

To increase speed using cruise control switch

Press up the cruise control RES/+ switch and hold it. Your vehicle will accelerate. Release the switch at the speed you want.

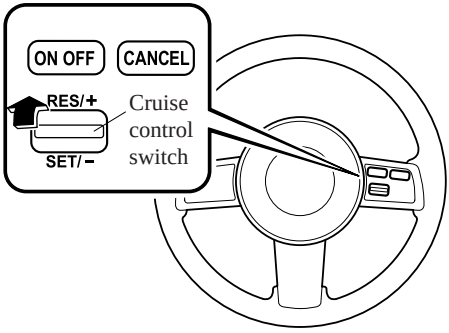

Your vehicle has a tap-up feature that allows you to increase your current speed in increments of 1.6 km/h (1 mph) by a momentary tap of the cruise control RES/+ switch. Multiple taps will increase your vehicle speed 1.6 km/h (1 mph) for each tap.

To increase speed using accelerator pedal

Depress the accelerator pedal to accelerate to the desired speed.
Press down the cruise control SET/- switch and release it immediately.

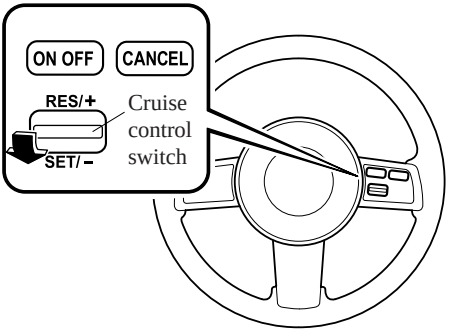

NOTE

Accelerate if you want to speed up temporarily when the cruise control is on. Greater speed will not interfere with or change the set speed. Take your foot off the accelerator to return to the set speed.

▼To Decrease Cruising Speed

Press down the cruise control SET/- switch and hold it. The vehicle will gradually slow.
Release the switch at the desired speed.

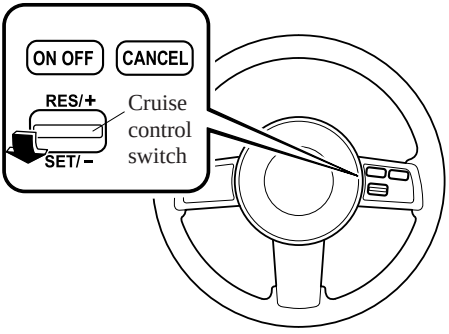

Your vehicle has a tap-down feature that allows you to decrease your current speed in decrements of 1.6 km/h (1 mph) by a momentary tap of the cruise control SET/- switch. Multiple taps will decrease your vehicle speed 1.6 km/h (1 mph) for each tap.

▼To Resume Cruising Speed at More Than 30 km/h (19 mph)

If some other method besides the ON/OFF switch was used to cancel cruising speed (such as applying the brake pedal) and the system is still activated, the most recent set speed will automatically resume when the cruise control RES/+ switch is pressed up.
If vehicle speed is below 30 km/h (19 mph), increase the vehicle speed up to 30 km/h (19 mph) or more and press up the cruise control RES/+ switch.

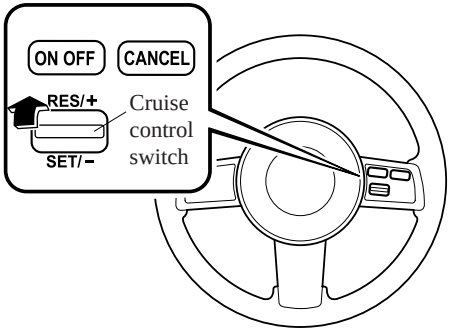

▼To Cancel

To cancel the system, use **one** of these methods:

- Press the ON/OFF switch.
- Slightly depress the brake pedal.
- Depress the clutch pedal (Manual transmission only).
- Press the CANCEL switch.

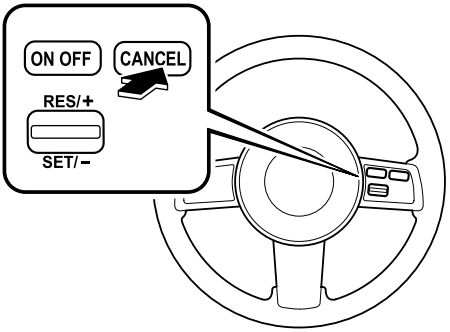

The system turns off when the ignition is off.

NOTE

Cruise control will cancel at about 15 km/h (9 mph) below the preset speed (such as may happen when climbing a long, steep grade).

Traction Control System (TCS)*

The Traction Control System (TCS) enhances traction and safety by controlling engine torque and braking. When the TCS detects driving wheel slippage, it lowers engine torque and operates the brakes to prevent loss of traction.

This means that on a slick surface, the engine adjusts automatically to provide optimum power to the drive wheels, limiting wheel spin and loss of traction.

⚠ WARNING

Do not rely on the traction control system as a substitute for safe driving:

The traction control system (TCS) cannot compensate for unsafe and reckless driving, excessive speed, tailgating (following another vehicle too closely), and hydroplaning (reduced tire friction and road contact because of water on the road surface). You can still have an accident.

Use snow tires or tire chains and drive at reduced speeds when roads are covered with ice and/or snow:

Driving without proper traction devices on snow and/or ice-covered roads is dangerous. The traction control system (TCS) alone cannot provide adequate traction and you could still have an accident.

NOTE

To turn off the TCS, press the DSC OFF switch (page 5-28).

▼TCS/DSC Indicator Light

This indicator light stays on for a few seconds when the ignition is switched ON. If the TCS or DSC is operating, the indicator light flashes.

If the light stays on, the TCS or DSC may have a malfunction and they may not operate correctly. Take your vehicle to an Authorized Mazda Dealer.

NOTE

- *In addition to the indicator light flashing, a slight lugging sound will come from the engine. This indicates that the TCS is operating properly.*
- *On slippery surfaces, such as fresh snow, it will be impossible to achieve high rpm when the TCS is on.*

*Some models.

Dynamic Stability Control (DSC)*

The Dynamic Stability Control (DSC) automatically controls braking and engine torque in conjunction with systems such as ABS and TCS to help control side slip when driving on slippery surfaces, or during sudden or evasive maneuvering, enhancing vehicle safety.

Refer to ABS (page 5-9) and TCS (page 5-26).

WARNING

Do not rely on the dynamic stability control as a substitute for safe driving:

The dynamic stability control (DSC) cannot compensate for unsafe and reckless driving, excessive speed, tailgating (following another vehicle too closely), and hydroplaning (reduced tire friction and road contact because of water on the road surface). You can still have an accident.

CAUTION

- *The DSC may not operate correctly unless the following are observed:*
  - *Use tires of the correct size specified for your Mazda on all four wheels.*
  - *Use tires of the same manufacturer, brand and tread pattern on all four wheels.*
  - *Do not mix worn tires.*
- *The DSC may not operate correctly when tire chains are used or a temporary spare tire is installed because the tire diameter changes.*
- *If repair or replacement of the steering or other surrounding equipment is necessary, have it done at an Authorized Mazda Dealer. If the center position of the steering deviates, the DSC may not operate correctly because there is a sensor in the steering which detects driving conditions.*

▼TCS/DSC Indicator Light

This indicator light stays on for a few seconds when the ignition is switched ON. If the TCS or DSC is operating, the indicator light flashes.

If the light stays on, the TCS or DSC may have a malfunction and they may not operate correctly. Take your vehicle to an Authorized Mazda Dealer.

*Some models.

▼DSC OFF Indicator Light

DSC OFF

This indicator light stays on for a few seconds when the ignition is switched ON.
It also illuminates when the DSC OFF switch is pressed and TCS/DSC is switched off (page 5-28).

If the light stays on when the TCS/DSC is not switched off, take your vehicle to an Authorized Mazda Dealer. The dynamic stability control may have a malfunction.

NOTE
If the battery is disconnected or a fuse is replaced, the DSC will be inoperable. In this case, the DSC OFF indicator light flashes and the TCS/DSC indicator light illuminates.
To make the DSC operable, do the following procedure with the battery connected.

1. *Switch the ignition ON.*
2. *Turn the steering clockwise fully, then turn it counterclockwise fully.*
3. *Make sure the DSC OFF indicator turn off.*
4. *Switch the ignition off, then switch the ignition to ON again.*
5. *Make sure the TCS/DSC indicator light turns off.*

If the TCS/DSC indicator light and the DSC OFF indicator light remain illuminated even after switching the ignition from ON to OFF, and back to ON, attempt the procedure again. If this still does not resolve the issue, consult an Authorized Mazda Dealer.

▼DSC OFF Switch

Press the DSC OFF switch to turn off the TCS/DSC. The DSC OFF indicator light will illuminate.

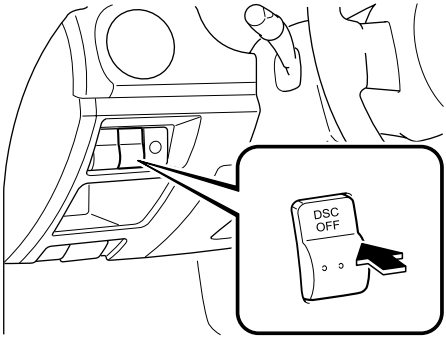

Press the switch again to turn the TCS/DSC back on. The DSC OFF indicator light will go out.

NOTE

- *When DSC is on and you attempt to free the vehicle when it is stuck, or drive it out of freshly fallen snow, the TCS (part of the DSC system) will activate. Depressing the accelerator will not increase engine power and freeing the vehicle may be difficult. When this happens, turn off the TCS/DSC.*
- *If the TCS/DSC is off when the engine is turned off, it automatically activates when the ignition is switched ON.*
- *Leaving the TCS/DSC on will provide the best stability. When the TCS/DSC is off, the TCS/DSC does not activate but the brake LSD (Limited Slip Differentials) function remains.*
- *If the DSC OFF switch is pressed and held for a second or more, the TCS/DSC system may become inoperative due to the system detecting a switch problem. If the TCS/DSC system becomes inoperative, the TCS/DSC and the DSC OFF indicator lights illuminate simultaneously. In this case, turn off the engine and restart it to restore the TCS/DSC.*

Tire Pressure Monitoring System*

The tire pressure monitoring system (TPMS) monitors the pressure for each tire.
If tire pressure is too low in one or more tires, the system will inform the driver via the warning light in the instrument panel and by the warning beep sound.

The tire pressure sensors installed on each wheel send tire pressure data by radio signal to the receiver unit in the vehicle.

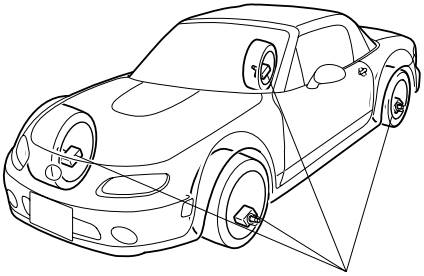

Tire pressure sensors

NOTE
When the ambient temperature is low due to seasonal changes, tire temperatures are also lower. When the tire temperature decreases, the air pressure decreases as well. The TPMS warning light may illuminate more frequently. Visually inspect the tires daily before driving, and check tire pressures monthly with a tire pressure gauge. When checking tire pressures, use of a digital tire pressure gauge is recommended.

TPMS does not alleviate your need to check the pressure and condition of all four tires regularly.

 *Some models.

⚠ CAUTION

- *Each tire, including the spare (if provided), should be checked monthly when cold and inflated to the inflation pressure recommended by the vehicle manufacturer on the vehicle placard or tire inflation pressure label. (If your vehicle has tires of a different size than the size indicated on the vehicle placard or tire inflation pressure label, you should determine the proper tire inflation pressure for those tires.)*
  As an added safety feature, your vehicle has been equipped with a tire pressure monitoring system (TPMS) that illuminates a low tire pressure telltale when one or more of your tires is significantly under-inflated. Accordingly, when the low tire pressure telltale illuminates, you should stop and check your tires as soon as possible, and inflate them to the proper pressure. Driving on a significantly under-inflated tire causes the tire to overheat and can lead to tire failure. Under-inflation also reduces fuel efficiency and tire tread life, and may affect the vehicle's handling and stopping ability.
  Please note that the TPMS is not a substitute for proper tire maintenance, and it is the driver's responsibility to maintain correct tire pressure, even if under-inflation has not reached the level to trigger illumination of the TPMS low tire pressure telltale.
- *Your vehicle has also been equipped with a TPMS malfunction indicator to indicate when the system is not operating properly.*
  The TPMS malfunction indicator is combined with the low tire pressure telltale. When the system detects a malfunction, the telltale will flash for approximately one minute and then remain continuously illuminated. This sequence will continue upon subsequent vehicle start-ups as long as the malfunction exists. When the malfunction indicator is illuminated, the system may not be able to detect or signal low tire pressure as intended. TPMS malfunctions may occur for a variety of reasons, including the installation of replacement or alternate tires or wheels on the vehicle that prevent the TPMS from functioning properly. Always check the TPMS malfunction telltale after replacing one or more tires or wheels on your vehicle to ensure that the replacement or alternate tires and wheels allow the TPMS to continue to function properly.
- *To avoid false readings, the system samples for a little while before indicating a problem. As a result it will not instantaneously register a rapid tire deflation or blow out.*

NOTE

This device complies with part 15 of the FCC Rules. Operation is subject to the following two conditions: (1) This device may not cause harmful interference, and (2) this device must accept any interference received, including interference that may cause undesired operation.

▼Tire Pressure Monitoring System Warning Light

This warning light illuminates for a few seconds when the ignition is switched ON.

Thereafter, the warning light illuminates and a beep is heard when tire pressure is too low in one or more tires, and flashes when there is a system malfunction.

WARNING

If the tire pressure monitoring system warning light illuminates or flashes, or the tire pressure warning beep sound is heard, decrease vehicle speed immediately and avoid sudden maneuvering and braking:

If the tire pressure monitoring system warning light illuminates or flashes, or the tire pressure warning beep sound is heard, it is dangerous to drive the vehicle at high speeds, or perform sudden maneuvering or braking. Vehicle drivability could worsen and result in an accident.
To determine if you have a slow leak or a flat, pull over to a safe position where you can check the visual condition of the tire and determine if you have enough air to proceed to a place where air may be added and the system monitored again by an Authorized Mazda Dealer or a tire repair station.

Do not ignore the TPMS Warning Light:

Ignoring the TPMS warning light is dangerous, even if you know why it is illuminated. Have the problem taken care of as soon as possible before it develops into a more serious situation that could lead to tire failure and a dangerous accident.

Warning light illuminates/Warning beep sounds

When the warning light illuminates, and the warning beep sound is heard (about 3 seconds), tire pressure is too low in one or more tires.

Adjust the tire pressure to the correct tire pressure. Refer to the specification charts (page 10-7).

⚠ CAUTION

When replacing/repairing the tires or wheels or both, have the work done by an Authorized Mazda Dealer, or the tire pressure sensors may be damaged.

NOTE

- *Perform tire pressure adjustment when the tires are cold. Tire pressure will vary according to the tire temperature, therefore let the vehicle stand for 1 hour or only drive it 1.6 km (1 mile) or less before adjusting the tire pressures. When pressure is adjusted on hot tires to the cold inflation pressure, the TPMS warning light/beep may turn on after the tires cool and pressure drops below specification.*
  Also, an illuminated TPMS warning light, resulting from the tire air pressure dropping due to cold ambient temperature, may turn off if the ambient temperature rises. In this case, it will also be necessary to adjust the tire air pressures. If the TPMS warning light illuminates due to a drop in tire air pressure, make sure to check and adjust the tire air pressures.
- *After adjusting the tire air pressures, it may require some time for the TPMS warning light to turn off. If the TPMS warning light remains illuminated, drive the vehicle at a speed of at least 25 km/h (16 mph) for 10 minutes, and then verify that it turns off.*
- *Tires lose air naturally over time and the TPMS cannot tell if the tires are getting too soft over time or you have a flat. However, when you find one low tire in a set of four- that is an indication of trouble; you should have someone drive the vehicle slowly forward so you can inspect any low tire for cuts and any metal objects sticking through tread or sidewall. Put a few drops of water in the valve stem to see if it bubbles indicating a bad valve. Leaks need to be addressed by more than simply refilling the trouble tire as leaks are dangerous - take it to an Authorized Mazda Dealer which has all the equipment to fix tires, TPMS systems and order the best replacement tire for your vehicle.*

If the warning light illuminates again even after the tire pressures are adjusted, there may be a tire puncture.
Refer to Vehicle with run-flat tires on page 7-3.

Vehicles with Instant Mobility System (IMS) emergency flat tire repair kit

If an emergency tire repair is needed, repair the punctured tire with the emergency flat tire repair kit (page 7-7).

⚠ CAUTION

Do not use non-genuine tire sealant. It may damage the tire pressure sensor.

Vehicles with optional temporary spare tire

If you have bought the optional temporary spare tire, replace the punctured tire with the temporary spare tire. Refer to the manufacturer's instructions.

Warning light flashes

When the warning light flashes, there may be a system malfunction. Consult an Authorized Mazda Dealer.

▼Flat Tire Warning Light

FLAT
TIRE

This warning light illuminates for a few seconds when the ignition is switched ON.

Warning light illuminates/Warning beep sounds

If the tire pressures decrease extremely after the TPMS warning light has illuminated, or if a tire is punctured, the flat tire warning light also illuminates, and a beep sound will be heard for approximately 30 seconds.
Refer to Vehicle with run-flat tires on page 7-3.

▼System Error Activation

When the TPMS warning light flashes, there may be a system malfunction. Consult an Authorized Mazda Dealer.
A system error activation may occur in the following cases:

- When there is equipment or a device near the vehicle using the same radio frequency as that of the tire pressure sensors.
- When a metallic device such as a non-genuine navigation system is equipped near the center of the dashboard, which may block radio signals from the tire pressure sensor to the receiver unit.
- When using the following devices in the vehicle that may cause radio interference with the receiver unit.
  - A digital device such as a personal computer.
  - A current converter device such as a DC-AC converter.
- When excess snow or ice adheres to the vehicle, especially around the wheels.
- When the tire pressure sensor batteries are exhausted.
- When using a wheel with no tire pressure sensor installed.
- When using tires with steel wire reinforcement in the side walls.
- When using tire chains.

▼Tires and Wheels

⚠ CAUTION

When inspecting or adjusting the tire air pressures, do not apply excessive force to the stem part of the wheel unit. The stem part could be damaged.

Changing tires and wheels

The following procedure allows the TPMS to recognize a tire pressure sensor's unique ID signal code whenever tires or wheels are changed, such as changing to and from winter tires.

NOTE

Each tire pressure sensor has a unique ID signal code. The signal code must be registered with the TPMS before it can work. The easiest way to do it is to have an Authorized Mazda Dealer change your tire and complete ID signal code registration.

When having tires changed at an Authorized Mazda Dealer

When an Authorized Mazda Dealer changes your vehicle's tires, they will complete the tire pressure sensor ID signal code registration.

When changing tires yourself

If you or someone else changes tires, you or someone else can also undertake the steps for the TPMS to complete the ID signal code registration.

1. After tires have been changed, switch the ignition ON, then back to ACC or OFF.
2. Wait for about 15 minutes.
3. After about 15 minutes, drive the vehicle at a speed of at least 25 km/h (16 mph) for 10 minutes and the tire pressure sensor ID signal code will be registered automatically.

NOTE

If the vehicle is driven within about 15 minutes of changing tires, the tire pressure monitoring system warning light will flash because the sensor ID signal code would not have been registered. If this happens, park the vehicle for about 15 minutes, after which the sensor ID signal code will register upon driving the vehicle for 10 minutes.

Replacing tires and wheels

⚠ CAUTION

- *When replacing/repairing the tires or wheels or both, have the work done by an Authorized Mazda Dealer, or the tire pressure sensors may be damaged.*
- *The wheels equipped on your Mazda are specially designed for installation of the tire pressure sensors. Do not use non-genuine wheels, otherwise it may not be possible to install the tire pressure sensors.*

Be sure to have the tire pressure sensors installed whenever tires or wheels are replaced.
When having a tire or wheel or both replaced, the following types of tire pressure sensor installations are possible.

- The tire pressure sensor is removed from the old wheel and installed to the new one.
- The same tire pressure sensor is used with the same wheel. Only the tire is replaced.

- A new tire pressure sensor is installed to a new wheel.

NOTE

- *The tire pressure sensor ID signal code must be registered when a new tire pressure sensor is purchased. For purchase of a tire pressure sensor and registration of the tire pressure sensor ID signal code, consult an Authorized Mazda Dealer.*
- *When reinstalling a previously removed tire pressure sensor to a wheel, replace the grommet (seal between valve body/sensor and wheel) for the tire pressure sensor.*

Meters and Gauges

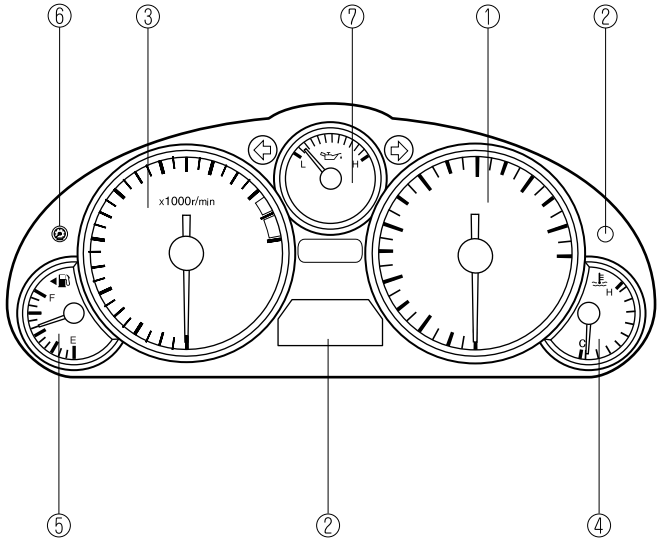

① Speedometer ..... page 5-38
② Odometer, Trip Meter, Average Fuel Economy Display, Outside Temperature Display and Selector ..... page 5-38
③ Tachometer ..... page 5-39
④ Engine Coolant Temperature Gauge ..... page 5-40
⑤ Fuel Gauge ..... page 5-40
⑥ Dashboard Illumination ..... page 5-41
⑦ Engine Oil Pressure Gauge ..... page 5-41

▼Speedometer

The speedometer indicates the speed of the vehicle.

▼Odometer, Trip Meter, Average Fuel Economy Display, Outside Temperature Display and Selector

The ignition must be switched ON.
Each time the selector is pressed the display switches in the order of trip meter A, trip meter B, the average fuel economy display and the outside temperature display.

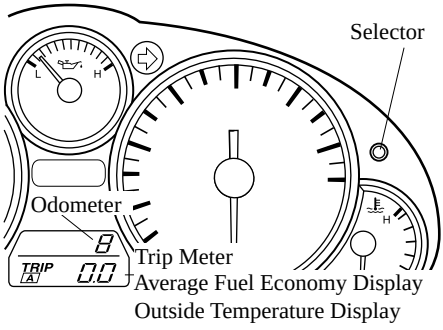

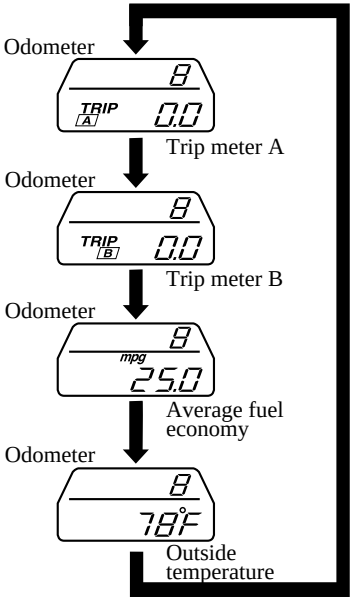

Odometer

The odometer records the total distance the vehicle has been driven.

Trip meter

The trip meter can record the total distance of two trips. One is recorded in trip meter A, and the other is recorded in trip meter B.

For instance, trip meter A can record the distance from the point of origin, and trip meter B can record the distance from where the fuel tank is filled.

When trip meter A is selected, pressing the selector again within one second will change to trip meter B mode.

When trip meter A is selected, TRIP A will be displayed. When trip meter B is selected, TRIP B will be displayed.

The trip meter records the total distance the vehicle is driven until the meter is again reset. Return it to “0.0” by holding the selector depressed for 1 second or more. Use this meter to measure trip distances and to compute fuel consumption.

NOTE

- *Only the trip meters record tenths of kilometers (miles).*
- *The trip record will be erased when:*
  - *The power supply is interrupted (blown fuse or the battery is disconnected).*
  - *The vehicle is driven over 999.9 km (mile).*

Average fuel economy display

This mode displays the average fuel economy by calculating the total fuel consumption and the total traveled distance since purchasing the vehicle, re-connecting the battery after disconnection, or resetting the data. The average fuel economy is calculated and displayed every minute.
To clear the data being displayed, press the selector for more than 1 second. After pressing the selector, - - - L/100 km (- - - mpg) will be displayed for about 1 minute before the fuel economy is recalculated and displayed.

Outside temperature display

This mode displays the outside temperature.

NOTE

- ***(Temperature unit change function)*** *
  To change the outside temperature display from Fahrenheit (°F) to Centigrade (°C), press and hold the selector for several seconds while the outside temperature is displayed.
- *Under the following conditions, the ambient temperature display may differ from the actual ambient temperature depending on the surroundings and vehicle conditions:*
  - *Significantly cold or hot temperatures.*
  - *Sudden changes in ambient temperature.*
  - *The vehicle is parked.*
  - *The vehicle is driven at low speeds.*

▼Tachometer

The tachometer shows engine speed in thousands of revolutions per minute (rpm).
Manual Transmission

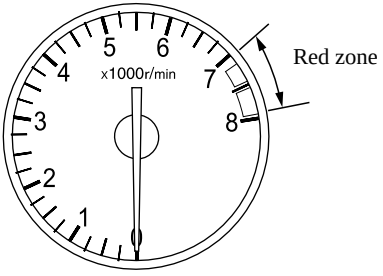

*Some models.

Automatic Transmission

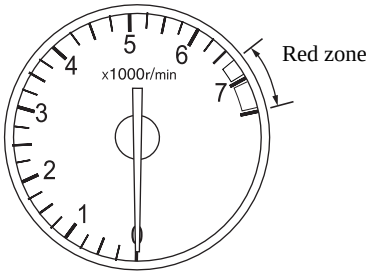

⚠ CAUTION

Do not run the engine with the tachometer needle in the RED ZONE. This may cause severe engine damage.

▼Engine Coolant Temperature Gauge

The engine coolant temperature gauge shows the temperature of the engine coolant.

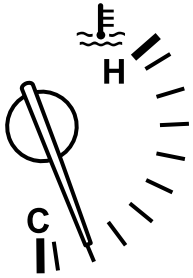

If the needle is near H, it indicates overheating.

⚠ CAUTION

Driving with an overheated engine can cause serious engine damage (page 7-18).

▼Fuel Gauge

The fuel gauge shows approximately how much fuel is remaining in the tank when the ignition is switched ON.
We recommend keeping the tank over 1/4 full. When the low fuel warning light illuminates or when the needle is near E, refuel as soon as possible.

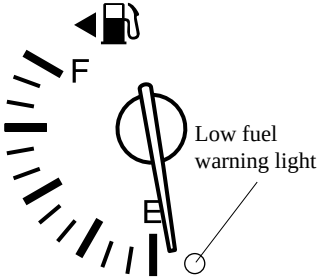

NOTE

- *After refueling, it may require some time for the needle to stabilize. In addition, the needle may deviate while driving on a slope or curve since the fuel moves in the tank.*
- *The direction of the arrow (◀⛽) indicates that the fuel-filler lid is on the left side of the vehicle.*

▼Engine Oil Pressure Gauge

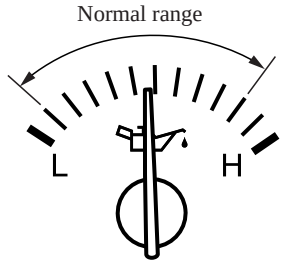

Engine oil pressure is normal when the engine oil pressure gauge needle points within the normal range.

If the needle on the gauge doesn't move after starting the engine, follow steps 1 through 3.

If the engine oil pressure gauge moves to L (low) while you are driving, drive to the side of the road and park off the right-of-way. Set the parking brake. Then follow steps 1 through 3.

1. Turn off the engine and inspect the engine oil level (page 8-19). If it's low, add oil.
2. Start the engine.
3. If the needle still doesn't move, have your vehicle checked at an Authorized Mazda Dealer.

⚠ CAUTION

Don't run the engine if the oil pressure is low. It could result in extensive engine damage.

▼Dashboard Illumination

When the exterior lights are on, rotate the knob to adjust the brightness of the dashboard lights.

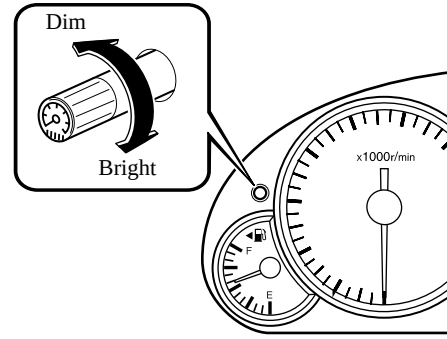

NOTE

This symbol ( ) indicates the knob to adjust the brightness of the dashboard illumination.

Warning/Indicator Lights

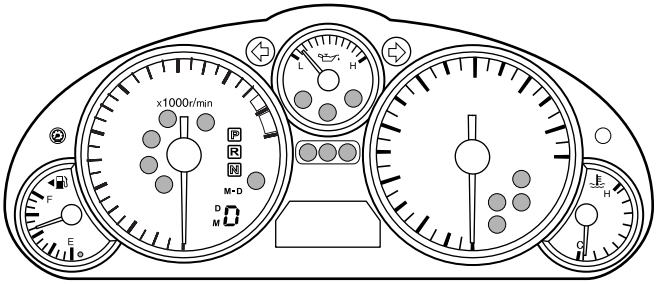

Warning/Indicator lights will appear in any of the highlighted areas

Signal	Warning/Indicator Lights	Page
BRAKE	Brake System Warning Light	5-44
	Charging System Warning Light	5-45
	Check Engine Light	5-46
ABS	ABS Warning Light	5-44
	Air Bag/Seat Belt Pretensioner System Warning Light	5-46
	Low Fuel Warning Light	5-47
	Seat Belt Warning Light/Beep	5-47

Signal	Warning/Indicator Lights	Page
	Door-Ajar Warning Light	5-48
AT	Automatic Transmission Warning Light	5-48
	Tire Pressure Monitoring System Warning Light	5-49
FLAT TIRE	Flat Tire Warning Light	5-51
	KEY Warning Light (Red)/KEY Indicator Light (Green)	5-51
	Security Indicator Light	5-53
	Headlight High-Beam Indicator Light	5-53
PRNDM	Shift Position Indicator Light	5-53
	TCS/DSC Indicator Light	5-54
DSC OFF	DSC OFF Indicator Light	5-54
CRUISE	Cruise Main Indicator Light (Amber)/Cruise Set Indicator Light (Green)	5-54
	Turn Signal/Hazard Warning Indicator Lights	5-55

▼Brake System Warning Light

This warning has the following functions:

Brake system warning

Illuminates when there is a malfunction in the brake switch.

Parking brake warning

The light illuminates when the parking brake is applied with the ignition switched to START or ON. It turns off when the parking brake is fully released.

Low brake fluid level warning

If the light stays on after the parking brake is fully released, you may have a brake problem.

Drive to the side of the road and park off the right-of-way.

You may notice that the pedal is harder to depress or that it may go closer to the floor. In either case, it will take longer to stop the vehicle.

1. With the engine stopped, open the hood and check the brake fluid level immediately, and then add fluid if required (page 8-22).
2. After adding fluid, check the light again.

If the warning light remains on, or if the brakes do not operate properly, do not drive the vehicle. Have it towed to an Authorized Mazda Dealer.

Even if the light turns off have your brake system inspected as soon as possible by an Authorized Mazda Dealer.

NOTE

Having to add brake fluid is sometimes an indicator of leakage. Consult an Authorized Mazda Dealer as soon as possible even if the brake light is no longer illuminated.

⚠ WARNING

Do not drive with the brake system warning light illuminated. Contact an Authorized Mazda Dealer to have the brakes inspected as soon as possible:

Driving with the brake system warning light illuminated is dangerous. It indicates that your brakes may not work at all or that they could completely fail at any time. If this light remains illuminated, after checking that the parking brake is fully released, have the brakes inspected immediately.

▼ABS Warning Light

The warning light stays on for a few seconds when the ignition is switched ON.

If the ABS warning light stays on while you're driving, the ABS control unit has detected a system malfunction. If this occurs, your brakes will function normally as if the vehicle had no ABS.
Should this happen, consult an Authorized Mazda Dealer as soon as possible.

NOTE

- *When the engine is jump-started to charge the battery, uneven rpm occurs and the ABS warning light may illuminate. If this occurs, it is the result of the weak battery and does not indicate an ABS malfunction.*
  Recharge the battery.
- ***(With DSC vehicles)***
  The brake assist system does not operate while the ABS warning light is illuminated.

▼Electronic Brake Force Distribution System Warning

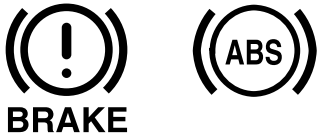

If the electronic brake force distribution control unit determines that some components are operating incorrectly, the control unit may illuminate the brake system warning light and the ABS warning light on simultaneously. The problem is likely to be the electronic brake force distribution system.

⚠ WARNING

Do not drive with both the ABS warning light and brake warning light illuminated. Have the vehicle towed to an Authorized Mazda Dealer to have the brakes inspected as soon as possible:

Driving when the brake system warning light and ABS warning light are illuminated simultaneously is dangerous.
When both lights are illuminated, the rear wheels could lock more quickly in an emergency stop than under normal circumstances.

▼Charging System Warning Light

This warning light illuminates when the ignition is switched ON and turns off when the engine is started.

If the warning light illuminates while driving, it indicates a malfunction of the alternator or of the charging system. Drive to the side of the road and park off the right-of-way. Consult an Authorized Mazda Dealer.

⚠ CAUTION

Do not continue driving when the charging system warning light is illuminated because the engine could stop unexpectedly.

▼Check Engine Light

This indicator light illuminates when the ignition is switched ON and turns off when the engine is started.

If this light illuminates while driving, the vehicle may have a problem. It is important to note the driving conditions when the light illuminated and consult an Authorized Mazda Dealer.

The check engine light may illuminate in the following cases:
- The fuel tank level being very low or approaching empty.
- The engine's electrical system has a problem.
- The emission control system has a problem.
- The fuel-filler cap is missing or not tightened securely.

If the check engine light remains on or flashes continuously, do not drive at high speeds and consult an Authorized Mazda Dealer as soon as possible.

▼Air Bag/Seat Belt Pretensioner System Warning Light

If the air bag/seat belt pretensioner system is working properly, the warning light illuminates when the ignition is switched ON or after the engine is cranked. The warning light turns off after a specified period of time.

A system malfunction is indicated if the warning light constantly flashes, constantly illuminates or does not illuminate at all when the ignition is switched ON. If any of these occur, consult an Authorized Mazda Dealer as soon as possible. The system may not work in an accident.

⚠ WARNING

Never tamper with the air bag/ pretensioner systems and always have an Authorized Mazda Dealer perform all servicing and repairs:

Self-servicing or tampering with the systems is dangerous. An air bag/ pretensioner could accidentally activate or become disabled causing serious injury or death.

▼Low Fuel Warning Light

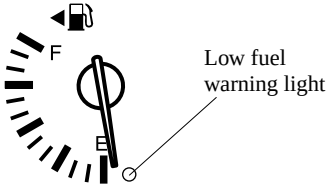

This warning light signals that the fuel tank will soon be empty.
Refuel as soon as possible.

▼Seat Belt Warning Light/Beep

The seat belt warning light illuminates and a beep sound will be heard if the driver's seat belt is not fastened when the ignition is switched ON.

Conditions of operation

Condition	Result
The driver's seat belt is not fastened when the ignition is switched ON.	The warning light flashes and a beep sound will be heard for about 6 seconds.
The driver's seat belt is fastened while the warning light and the beep sound are activated.	The warning light turns off and the beep sound stops.
The driver's seat belt is fastened before the ignition is switched ON.	The warning light will not illuminate and the beep sound will not be heard.

Belt minder

NOTE

Consult an Authorized Mazda Dealer to deactivate or restore the belt minder. Though the belt minder can be deactivated, doing so will defeat the purpose of the system to warn the driver and the front passenger in the event that their seat belts are not fastened. For the safety of the driver and front passenger, Mazda recommends not deactivating the belt minder.

Driver seated/Passenger not seated

The belt minder is a supplemental warning to the seat belt warning function. If the driver's seat belt is not fastened when the ignition is switched ON, the warning light/beep operates to give you further reminders according to the chart below.

Condition	Vehicle speed			
	Between 0 20 km/h (0 12 mph)		20 km/h (12 mph) or more	
Seat belt	○	×	○	×
Indicator				
Beep				♪

○ : Fastened
× : Unfastened
: Illuminated
: Flashing
♪ : Beep

Once the beep sound is heard, it continues sounding even if the vehicle speed lowers to 20 km/h (12 mph) or less until the seatbelt is fastened or the beep sound period has passed.

Driver seated/Passenger seated
The seat belt warning function reminds the passenger to fasten the seat belt according to the chart below.

Condition	Vehicle speed							
	Between 0 20 km/h (0 12 mph)				20 km/h (12 mph) or more			
Seat belt (Driver)	○	○	×	×	○	○	×	×
Seat belt (Passenger)	○	×	○	×	○	×	○	×
Indicator								
Beep						♪	♪	♪

○ : Fastened
× : Unfastened
: Illuminated
: Flashing
♪ : Beep

Placing heavy items on the passenger seat may cause the passenger seat belt warning function to operate depending on the weight of the item.

Once the beep sound is heard, it continues sounding even if the vehicle speed lowers to 20 km/h (12 mph) or less until the seatbelt is fastened or the beep sound period has passed.

NOTE
- *To allow the passenger seat weight sensor to function properly, do not place and sit on an additional seat cushion on the passenger seat. The sensor may not function properly because the additional seat cushion could cause sensor interference.*
- *When a small child sits on the passenger seat, it is possible that neither the warning light nor the warning beep operate.*

▼Door-Ajar Warning Light

This warning light illuminates when any door is not securely closed.
Close the door securely before driving the vehicle.

▼Automatic Transmission Warning Light

This warning light stays on for a few seconds when the ignition is switched ON.
The light illuminates when the transmission has a problem.

⚠ CAUTION

If the automatic transmission warning light illuminates, the transmission has an electrical problem. Continuing to drive your Mazda in this condition could cause damage to your transmission. Consult an Authorized Mazda Dealer as soon as possible.

▼Tire Pressure Monitoring System (TPMS) Warning Light*

This warning light illuminates for a few seconds when the ignition is switched ON.

Thereafter, the warning light illuminates and a beep is heard when tire pressure is too low in one or more tires, and flashes when there is a system malfunction.

⚠ WARNING

If the tire pressure monitoring system warning light illuminates or flashes, or the tire pressure warning beep sound is heard, decrease vehicle speed immediately and avoid sudden maneuvering and braking:

If the tire pressure monitoring system warning light illuminates or flashes, or the tire pressure warning beep sound is heard, it is dangerous to drive the vehicle at high speeds, or perform sudden maneuvering or braking. Vehicle drivability could worsen and result in an accident.
To determine if you have a slow leak or a flat, pull over to a safe position where you can check the visual condition of the tire and determine if you have enough air to proceed to a place where air may be added and the system monitored again by an Authorized Mazda Dealer or a tire repair station.

Do not ignore the TPMS Warning Light:

Ignoring the TPMS warning light is dangerous, even if you know why it is illuminated. Have the problem taken care of as soon as possible before it develops into a more serious situation that could lead to tire failure and a dangerous accident.

Warning light illuminates/Warning beep sounds

When the warning light illuminates, and the warning beep sound is heard (about 3 seconds), tire pressure is too low in one or more tires.

*Some models.

Adjust the tire pressure to the correct tire pressure. Refer to the specification charts (page 10-7).

⚠ CAUTION

When replacing/repairing the tires or wheels or both, have the work done by an Authorized Mazda Dealer, or the tire pressure sensors may be damaged.

NOTE

- *Perform tire pressure adjustment when the tires are cold. Tire pressure will vary according to the tire temperature, therefore let the vehicle stand for 1 hour or only drive it 1.6 km (1 mile) or less before adjusting the tire pressures. When pressure is adjusted on hot tires to the cold inflation pressure, the TPMS warning light/beep may turn on after the tires cool and pressure drops below specification.*
  Also, an illuminated TPMS warning light, resulting from the tire air pressure dropping due to cold ambient temperature, may turn off if the ambient temperature rises. In this case, it will also be necessary to adjust the tire air pressures. If the TPMS warning light illuminates due to a drop in tire air pressure, make sure to check and adjust the tire air pressures.
- *After adjusting the tire air pressures, it may require some time for the TPMS warning light to turn off. If the TPMS warning light remains illuminated, drive the vehicle at a speed of at least 25 km/h (16 mph) for 10 minutes, and then verify that it turns off.*
- *Tires lose air naturally over time and the TPMS cannot tell if the tires are getting too soft over time or you have a flat. However, when you find one low tire in a set of four- that is an indication of trouble; you should have someone drive the vehicle slowly forward so you can inspect any low tire for cuts and any metal objects sticking through tread or sidewall. Put a few drops of water in the valve stem to see if it bubbles indicating a bad valve. Leaks need to be addressed by more than simply refilling the trouble tire as leaks are dangerous - take it to an Authorized Mazda Dealer which has all the equipment to fix tires, TPMS systems and order the best replacement tire for your vehicle.*

If the warning light illuminates again even after the tire pressures are adjusted, there may be a tire puncture.
Refer to Vehicle with run-flat tires on page 7-3.

Vehicles with Instant Mobility System (IMS) emergency flat tire repair kit

If an emergency tire repair is needed, repair the punctured tire with the emergency flat tire repair kit (page 7-7).

⚠ CAUTION

Do not use non-genuine tire sealant. It may damage the tire pressure sensor.

Vehicles with optional temporary spare tire

If you have bought the optional temporary spare tire, replace the punctured tire with the temporary spare tire. Refer to the manufacturer's instructions.

Warning light flashes

When the warning light flashes, there may be a system malfunction. Consult an Authorized Mazda Dealer.

▼Flat Tire Warning Light*

FLAT
TIRE

This warning light illuminates for a few seconds when the ignition is switched ON.

Warning light illuminates/Warning beep sounds

If the tire pressures decrease extremely after the TPMS warning light has illuminated, or if a tire is punctured, the flat tire warning light also illuminates, and a beep sound will be heard for approximately 30 seconds.
Refer to Vehicle with run-flat tires on page 7-3.

▼KEY Warning Light (Red)/KEY Indicator Light (Green) (with Advanced Key)

This indicator has two colors.

KEY Warning Light (Red)

When illuminated

- When the ignition is switched ON, it illuminates momentarily and then goes out.
- If any malfunction occurs in the advanced keyless system, it illuminates continuously.

*Some models.

WARNING

Do not drive the vehicle with the KEY warning light illuminated:

If the KEY warning light remains illuminated, do not continue to drive using the advanced key system. Park the vehicle in a safe place and use the auxiliary key to continue driving the vehicle. Have the vehicle inspected at an Authorized Mazda Dealer as soon as possible.

When flashing

- Under the following conditions, the KEY warning light (red) flashes to inform the driver that the start knob will not rotate to the ACC position even if it is pushed in from the OFF/LOCK position.
  - The advanced key battery is dead.
  - The advanced key is not within operational range.
  - The advanced key is placed in areas where it is difficult for the system to detect the signal (page 3-7).
  - A key from another manufacturer similar to the advanced key is in the operational range.
- Under the following conditions, the KEY warning light (red) will flash continuously when the start knob has not been returned to the OFF/LOCK position to notify the driver that the advanced key has been removed from the vehicle. It will stop flashing when the advanced key is back inside the vehicle.
  - The start knob has not been returned to the OFF/LOCK position, the driver's door is open, and the advanced key is removed from the vehicle.
  - The start knob has not been returned to the OFF/LOCK position and all the doors are closed after removing the advanced key from the vehicle.

NOTE

The flashing KEY warning light (red) and the beep sound operate simultaneously (page 3-22).

KEY Indicator Light (Green)

When illuminated

When the start knob is pushed in from the OFF/LOCK position, the system confirms that the correct advanced key is inside the vehicle, the KEY indicator light (green) illuminates, and the start knob can be turned to the ACC position (page 3-11).

When flashing

When the advanced key battery power is low, the KEY indicator light flashes for 30 seconds after the start knob is turned from the ON position to the ACC or OFF/LOCK position. Replace with a new battery before the advanced key becomes unusable (page 3-7).

NOTE
The advanced key can be set so that the KEY indicator light (green) does not flash even if the battery power is low.
Refer to Setting Change (Function Customization)(page 3-21).

▼Security Indicator Light

This indicator light starts flashing every 2 seconds when the ignition is switched from ON to ACC and the immobilizer system is armed.

The light stops flashing when the ignition is switched ON with the correct ignition key.
At this time, the immobilizer system is disarmed and the light illuminates for about 3 seconds and then turns off.

If the engine does not start with the correct ignition key, and the security indicator light keeps illuminating or flashing, the system may have a malfunction. Consult an Authorized Mazda Dealer.

▼Headlight High-Beam Indicator Light

This light indicates one of two things:
- The high-beam headlights are on.
- The turn signal lever is in the flash-to-pass position.

▼Shift Position Indicator Light (Automatic Transmission)

This indicates the selected shift position when the ignition is switched ON.

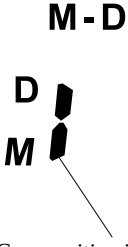

Gear position indicator

The gear position indicator displays the gear in use while in either manual shift or direct mode.

▼TCS/DSC Indicator Light*

This indicator light stays on for a few seconds when the ignition is switched ON. If the TCS or DSC is operating, the indicator light flashes.

If the light stays on, the TCS or DSC may have a malfunction and they may not operate correctly. Take your vehicle to an Authorized Mazda Dealer.

▼DSC OFF Indicator Light*

DSC
OFF

This indicator light stays on for a few seconds when the ignition is switched ON.
It also illuminates when the DSC OFF switch is pressed and TCS/DSC is switched off (page 5-28).

If the light stays on when the TCS/DSC is not switched off, take your vehicle to an Authorized Mazda Dealer. The dynamic stability control may have a malfunction.

NOTE

If the battery is disconnected or a fuse is replaced, the DSC will be inoperable. In this case, the DSC OFF indicator light flashes and the TCS/DSC indicator light illuminates.
To make the DSC operable, do the following procedure with the battery connected.

1. *Switch the ignition ON.*
2. *Turn the steering clockwise fully, then turn it counterclockwise fully.*
3. *Make sure the DSC OFF indicator turn off.*
4. *Switch the ignition off, then switch the ignition to ON again.*
5. *Make sure the TCS/DSC indicator light turns off.*

If the TCS/DSC indicator light and the DSC OFF indicator light remain illuminated even after switching the ignition from ON to OFF, and back to ON, attempt the procedure again. If this still does not resolve the issue, consult an Authorized Mazda Dealer.

▼Cruise Main Indicator Light (Amber)/Cruise Set Indicator Light (Green)*

CRUISE

The indicator light has two colors.

Cruise Main Indicator Light (Amber)

The indicator light illuminates amber when the ON/OFF switch is pressed and the cruise control system is activated.

 *Some models.

Cruise Set Indicator Light (Green)

The indicator light illuminates green when a cruising speed has been set.

▼Turn-Signal/Hazard Warning Indicator Lights

When operating the turn signal lights, the left or right turn signal indicator light flashes to indicate which turn signal light is operating (page 5-59).

When operating the hazard warning lights, both turn signal indicator lights flash (page 5-62).

NOTE

If an indicator light remains illuminated (does not flash) or if it flashes abnormally, one of the turn signal bulbs may be burned out.

Beep Sounds

▼Seat Belt Warning Beep

If the driver's seat belt is not fastened when the ignition is switched ON, a beep sound will be heard for about 6 seconds. If the driver's seat belt is not fastened and the vehicle is driven at a speed faster than about 20 km/h (12 mph), a beep sound will be heard again for a specified period of time.
Refer to Seat Belt Warning Light/Beep on page 5-47.

▼Ignition Key Reminder

If the ignition is switched off or the ignition is switched to ACC with the key inserted, a continuous beep sound will be heard when the driver's door is opened.

▼Lights-On Reminder

If lights are on and the key is removed from the ignition switch, a continuous beep sound will be heard when the driver's door is opened.

NOTE

When the advanced keyless function is used and the start knob is in the ACC position, the Start Knob Not in Lock Warning Beep (page 3-19) overrides the lights-on reminder.

▼Tire Inflation Pressure Warning Beep*

The warning beep sound will be heard for about 3 seconds if the tire pressures decrease.
If the tire pressure decreases extremely, a beep sound will be heard for approximately 30 seconds.
Refer to Tire Pressure Monitoring System on page 5-30.

▼Advanced Keyless Warning (with Advanced Key)

Warning indicators for the advanced key, such as “the advanced key removed from vehicle warning”, use a beep sound and warning/indicator lights in the instrument cluster.
Refer to Warning and Beep Sounds on page 3-19.

*Some models.

Lighting Control

▼Headlights

Turn the headlight switch to turn the headlights, other exterior lights and dashboard illumination on or off.

NOTE
To prevent discharging the battery, do not leave the lights on while the engine is off unless safety requires them.

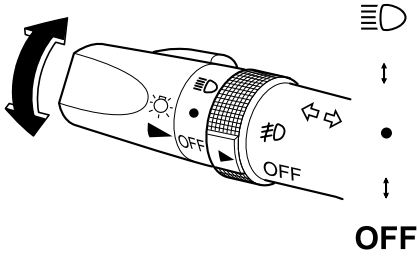

Switch Position	OFF	●	≣D
Headlights	Off	Off	On
Taillights Parking lights License lights Side-marker lights Dashboard illumination	Off	On	On

Xenon fusion headlight bulbs*

The low-beam bulbs of the headlights have xenon fusion bulbs that produce a bright white beam over a wide area.

⚠ WARNING

Do not replace the xenon fusion bulbs yourself
Replacing the xenon fusion bulbs yourself is dangerous. Because the xenon fusion bulbs require high voltage, you could receive an electric shock if the bulbs are handled incorrectly. Consult an Authorized Mazda Dealer when the replacement is necessary.

NOTE
If the headlights flicker, or the brightness weakens, the bulb-life may be depleted and a replacement is necessary. Consult an Authorized Mazda Dealer.

*Some models.

▼Lights-On Reminder

If lights are on and the key is removed from the ignition switch, a continuous beep sound will be heard when the driver's door is opened.

NOTE
When the advanced keyless function is used and the start knob is in the ACC position, the Start Knob Not in Lock Warning Beep (page 3-19) overrides the lights-on reminder.

▼Headlight High-Low Beam

Press the lever forward to turn on the high beams.
Pull the lever back to its original position for the low beams.

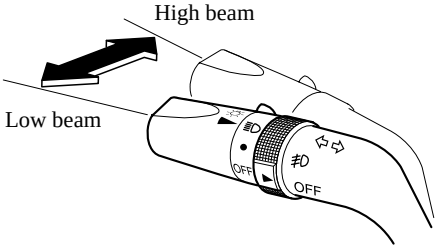

▼Flashing the Headlights

To flash the headlights, pull the lever fully towards you (the headlight switch does not need to be on). The lever will return to the normal position when released.

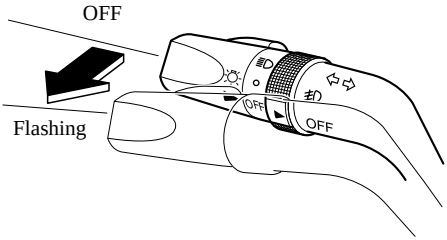

▼Daytime Running Lights (Canada)

In Canada, vehicles must be driven with the headlights on during daytime operation.

For that reason, the daytime running lights automatically turn on when the ignition is switched ON.

NOTE
The Daytime Running Lights turn off when the parking brake is applied.

Turn and Lane-Change Signals

Turn Signals

Move the signal lever down (for a left turn) or up (for a right turn) to the stop position. The signal will self-cancel after the turn is completed.

If the indicator light continues to flash after a turn, manually return the lever to its original position.

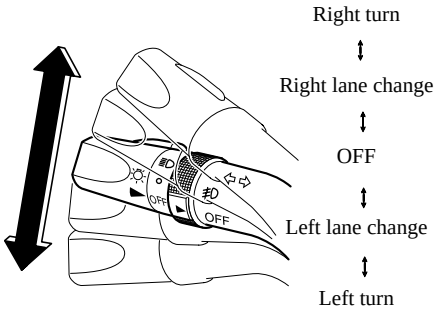

Green indicators on the dashboard show which signal is working.

Lane-change signals

Move the lever slightly toward the direction of the change until the indicator flashes and hold it there. It will return to the off position when released.

NOTE

If an indicator light stays on without flashing or if it flashes abnormally, one of the turn signal bulbs may be burned out.

Fog Lights *

Use this switch to turn on the fog lights. They help you to see as well as to be seen.

To turn the fog lights on, rotate the fog light switch to the position.
The headlight switch must be in the position before turning on the fog lights.

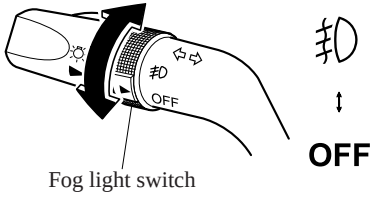

To turn them off, rotate the fog light switch to the OFF position or turn the headlight switch to the ● or OFF position.

NOTE

The fog lights will turn off when the headlights are set at high beam.

*Some models.

Windshield Wipers and Washer

The ignition must be switched ON.

⚠ WARNING

Use only windshield washer fluid or plain water in the reservoir:

Using radiator antifreeze as washer fluid is dangerous. If sprayed on the windshield, it will dirty the windshield, affect your visibility, and could result in an accident.

Only use windshield washer fluid mixed with anti-freeze protection in freezing weather conditions:

Using windshield washer fluid without anti-freeze protection in freezing weather conditions is dangerous as it could freeze on the windshield and block your vision which could cause an accident.
In addition, make sure the windshield is sufficiently warmed using the defroster before spraying the washer fluid.

NOTE

Because heavy ice and snow can jam the wiper blades, the wiper motor is protected from motor breakdown, overheating and possible fire by a circuit breaker. This mechanism will automatically stop operation of the blades, but only for about 5 minutes.
If this happens, turn off the wiper switch and park off the right-of-way, and remove the snow and ice.
After 5 minutes, turn on the switch and the blades should operate normally. If they do not resume functioning, consult an Authorized Mazda Dealer as soon as possible. Drive to the side of the road and park off the right-of-way. Wait until the weather clears before trying to drive with the wipers inoperative.

▼Windshield Wipers

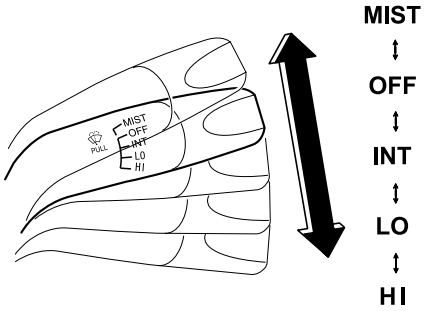

Turn the wipers on by pulling the lever down.
INT Intermittent
LO Low speed
HI High speed

For a single wiping cycle, push the lever up to MIST.
MIST Mist

▼Windshield Washer

Pull the lever toward you and hold it to spray washer fluid.

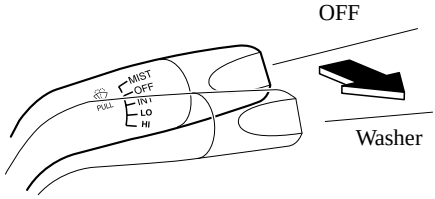

NOTE
With the wiper lever in the OFF or INT position, the wipers will operate continuously until the lever is released.

If the washer does not work, inspect the fluid level (page 8-23). If it's normal, consult an Authorized Mazda Dealer.

Rear Window Defroster

The rear window defroster clears frost, fog, and thin ice from the rear window.

The ignition must be switched ON.

Press the switch to turn on the rear window defroster, the indicator light will illuminate.

Press the switch again to turn it off.

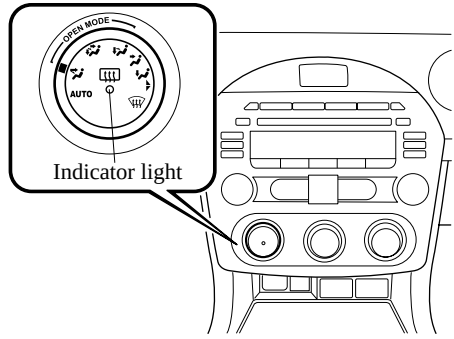

⚠ CAUTION

Do not use sharp instruments or window cleaners with abrasives to clean the inside of the rear window surface. They may damage the defroster grid inside the window.

NOTE
This defroster is not designed for melting snow. If there is an accumulation of snow on the rear window, remove it before using the defroster.

Horn

To sound the horn, press the mark on the steering wheel.

Hazard Warning Flasher

The hazard warning lights should always be used when you stop on or near a roadway in an emergency.

The hazard warning lights warn other drivers that your vehicle is a traffic hazard and that they must take extreme caution when near it.

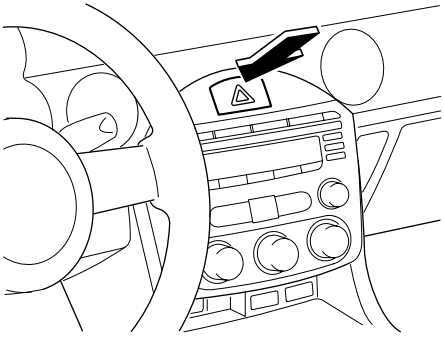

Depress the hazard warning flasher and all the turn signals will flash.

NOTE

- *The turn signals do not work when the hazard warning lights are on.*
- *Check local regulations about the use of hazard warning lights while the vehicle is being towed to verify that it is not in violation of the law.*

HomeLink Wireless Control System*

NOTE
HomeLink and HomeLink house are registered trademarks of Johnson Controls.

The HomeLink system replaces up to 3 hand-held transmitters with a single built-in component in the auto-dimming mirror. Pressing the HomeLink button on the auto-dimming mirror activates garage doors, gates and other devices surrounding your home.

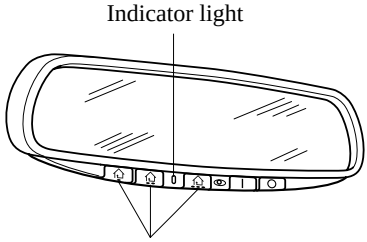

WARNING

Do not use the HomeLink system with any garage door opener that lacks the safety stop and reverse feature:

Using the HomeLink system with any garage door opener that lacks the safety stop and reverse feature as required by federal safety standards is dangerous. (This includes garage doors manufactured before April 1, 1982.)
Using these garage door openers can increase the risk of serious injury or death. For further information, contact HomeLink at 1-800-355-3515 or www.homelink.com or your Authorized Mazda Dealer.

Always check the areas surrounding garage doors and gates for people or obstructions before programming or during operation of the HomeLink system:

Programming or operating the HomeLink system without verifying the safety of areas surrounding garage doors and gates is dangerous and could result in an unexpected accident and serious injury if someone were to be hit.

CAUTION

HomeLink has been tested and complies with FCC and Industry Canada rules. Changes or modifications not expressly approved by the party responsible for compliance could void the user's authority to operate the device.

*Some models.

NOTE
FCC ID: NZLOBIHL3
CANADA:4112A-OBIHL3
This device complies with FCC rules part 15. Operation is subject to the following conditions:
1- This device may not cause any harmful interference and
2- This device must accept any interference that may be received including interference that may cause undesired operation.

NOTE
The programming will not be erased even if the battery is disconnected.

▼Pre-programming the HomeLink System

NOTE
It is recommended that a new battery be placed in the hand-held transmitter of the device being programmed to HomeLink for quicker training and accurate transmission of the radio-frequency signal.

- Verify that there is a remote control transmitter available for the device you would like to program.
- Disconnect the power to the device.

▼Programming the HomeLink System

⚠ CAUTION

When programming a garage door opener or a gate, disconnect the power to these devices before performing programming, as continuous operation of the devices could damage the motor.

The HomeLink system provides 3 buttons which can be individually selected and programmed using the transmitters for current, on-market devices as follows:

1. Press and hold the two outer HomeLink buttons (buttons one and three) releasing only when the indicator light begins to flash (after 20 seconds). **Do not** hold the buttons for longer than 30 seconds and **do not repeat step 1** to program a second and/or third hand-held transmitter to the remaining two HomeLink buttons.
2. Position the end of your hand-held transmitter 2.5 7.5 cm (1 3 inches) away from the HomeLink button you wish to program while keeping the indicator light in view.
3. Simultaneously press and hold both the chosen HomeLink and hand-held transmitter buttons. **Do not release the buttons until step 4 has been completed.**

NOTE
Some gate operators and garage door openers may require you to replace this Programming Step 3 with procedures noted in the "Gate Operator/Canadian Programming" section.

4. After the HomeLink indicator light changes from a slow to a rapidly blinking light, release both the HomeLink and hand-held transmitter buttons.

NOTE
*If the HomeLink indicator light does not change to a rapidly blinking light, contact HomeLink at **www.homelink.com** or call **1-800-355-3515** for assistance.*

5. Press and hold the just-trained HomeLink button and observe the indicator light.

If the indicator light **stays on constantly, programming is complete** and your device should activate when the HomeLink button is pressed and released.

NOTE
To program the remaining two HomeLink buttons, begin with "Programming" ***— step 2. Do not repeat step 1.***

If the indicator light blinks **rapidly for two seconds and then turns to a constant light, continue with "Programming" steps 6 8** to complete the programming of a rolling code equipped device (most commonly a garage door opener).

6. At the garage door opener receiver (motor-head unit) in the garage, locate the "learn" or "smart" button. This can usually be found where the hanging antenna wire is attached to the motor-head unit.
7. Firmly press and release the "learn" or "smart" button. (The name and color of the button may vary by manufacturer.)

NOTE
There are 30 seconds in which to initiate step 8.

8. Return to the vehicle and firmly **press, hold for two seconds and release** the programmed HomeLink button. Repeat the "**press/hold/release**" sequence a second time, and, depending on the brand of the garage door opener (or other rolling code equipped device), repeat this sequence a third time to complete the programming process.

HomeLink should now activate your rolling code equipped device.

NOTE
To program the remaining two HomeLink buttons, begin with "Programming" ***— step 2. Do not repeat step 1.***

For questions or comments, please contact HomeLink at **www.homelink.com** or **1-800-355-3515.**

▼Gate operator/Canadian Programming

Canadian radio-frequency laws require transmitter signals to "time-out" (or quit) after several seconds of transmission which may not be long enough for HomeLink to pick up the signal during programming. Similar to this Canadian law, some U.S. gate operators are designed to "time-out" in the same manner.

If you live in Canada or you are having difficulties programming a gate operator by using the "Programming" procedures (regardless of where you live), **replace "Programming HomeLink" step 3** with the following:

NOTE
If programming a garage door opener or gate operator, it is advised to unplug the device during the "cycling" process to prevent possible overheating.

Continue to press and hold the HomeLink button while you **press and release every two seconds** (“cycle”) your hand-held transmitter until the frequency signal has successfully been accepted by HomeLink. (The indicator light will flash slowly and then rapidly.)
Proceed with “Programming” step 4 to complete.

▼Operating the HomeLink System

Press the programmed HomeLink button to operate a programmed device. The code will continue being transmitted for a maximum of 20 seconds.

▼Reprogramming the HomeLink system

To program a device to HomeLink using a HomeLink button previously trained, follow these steps:

1. Press and hold the desired HomeLink button. **DO NOT** release the button.
2. The indicator light will begin to flash after 20 seconds. Without releasing the HomeLink button, proceed with “Programming” - step 2.

▼Erasing Programmed HomeLink Buttons

To erase the existing programming from all three operating channels, press and hold the two outside buttons (,) on the auto-dimming mirror until the HomeLink indicator light begins to flash after approximately 20 seconds.
Verify that the programming has been erased when you resell the vehicle.

6 Interior Comfort

Use of various features for drive comfort, including air-conditioning and audio system.

Climate Control System 6-2
Operating Tips 6-2
Vent Operation 6-3
Types of the Climate Control System 6-5
Manual Type* 6-6
Automatic Type* 6-10

Audio System 6-14
Antenna 6-14
Operating Tips for Audio System 6-15
Audio Set 6-25
Audio Control Switch Operation* 6-56
AUX Mode (Auxiliary input) 6-58
Safety Certification 6-60

Bluetooth Hands-Free 6-61
Bluetooth Hands-Free* 6-61
Basic Bluetooth Hands-Free Operation 6-64
Convenient Use of the Hands-Free System 6-68
Hands-Free Telephone Setting 6-73
When Bluetooth Hands-Free cannot be used 6-78
Safety Certification 6-78
Mazda Bluetooth Hands-Free Customer Service 6-79

Interior Equipment 6-80
Sunvisors 6-80
Interior Lights 6-80
Cup Holder 6-81
Multi-Pocket 6-81
Storage Compartments 6-82
Accessory Socket 6-83
Windblocker 6-84

*Some models.

Operating Tips

▼Operating the Climate Control System

Operate the climate control system with the engine running.

NOTE
To prevent the battery from being discharged, do not leave the fan control dial on for a long period of time with the ignition switched ON when the engine is not running.

▼Clearing the Air Inlet

Clear all obstructions such as leaves, snow and ice from the hood and the air inlet in the cowl grille to improve the system efficiency.

▼Foggy Windows

The windows may fog up easily in humid weather. Use the climate control system to defog the windows.

To help defog the windows, operate the air conditioner to dehumidify the air.

NOTE
The air conditioner may be used along with the heater to dehumidify the air.

▼Parking in Direct Sunlight

If the vehicle has been parked in direct sunlight during hot weather, open the windows to let warm air escape, then run the climate control system.

▼Not Using for a Long Period

Run the air conditioner about 10 minutes at least once a month to keep internal parts lubricated.

▼Check the Refrigerant before the Weather Gets Hot

Have the air conditioner checked before the weather gets hot. Lack of refrigerant may make the air conditioner less efficient. Consult an Authorized Mazda Dealer for refrigerant inspection.

The air conditioner is filled with HFC134a (R134a), a refrigerant that will not damage the ozone layer.
If the air conditioner is low on refrigerant or has a malfunction, consult an Authorized Mazda Dealer.

Vent Operation

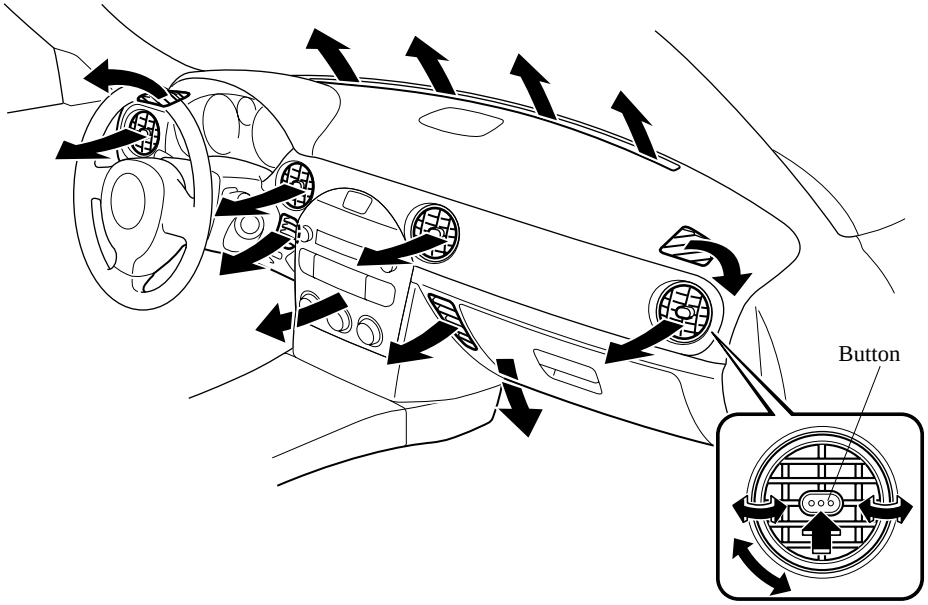

▼Adjusting the Vents

Directing airflow

You can direct air flow by rotating the vent.

Opening/closing vents

The two outside vents can be opened and closed with center button.

NOTE

When using the air conditioner, mist may come out from the vents. This is not a sign of trouble but a result of humid air being suddenly cooled.

▼Selecting the Airflow Mode

Dashboard Vents (OPEN MODE)

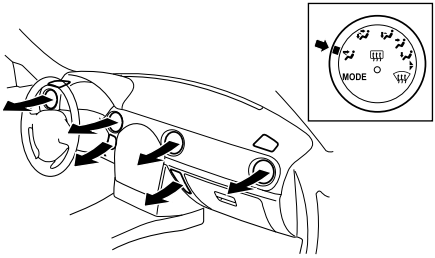

Dashboard Vents

Dashboard and Floor Vents (OPEN MODE)

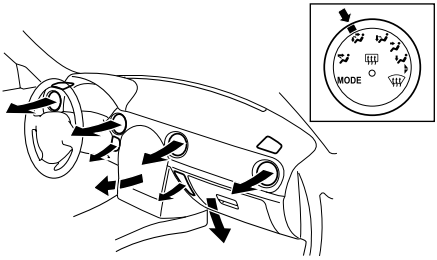

Floor Vents

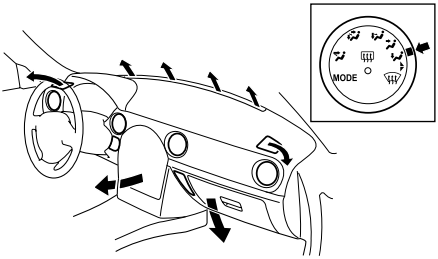

Floor Vents (OPEN MODE)

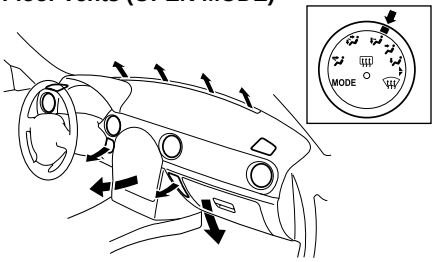

Defroster and Floor Vents

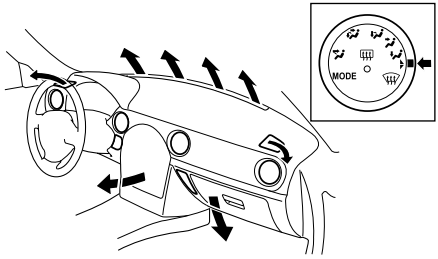

You will feel more comfortable by using the OPEN MODE when opening the roof.

Defroster Vents

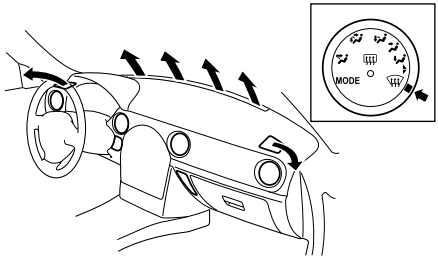

Types of the Climate Control System

Manual type and automatic type climate control systems are explained separately. Check your vehicle's climate control type and read the appropriate pages.

Manual Type ..... page 6-6

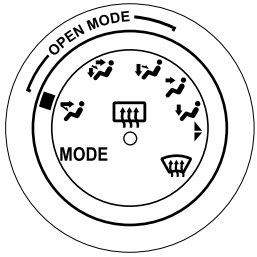

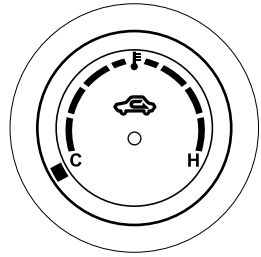

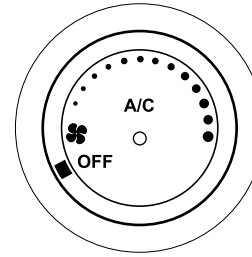

Automatic Type ..... page 6-10

Type A

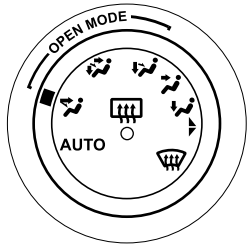

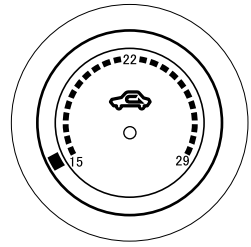

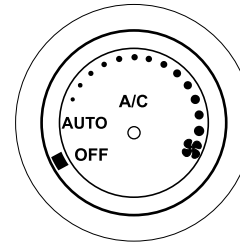

Type B

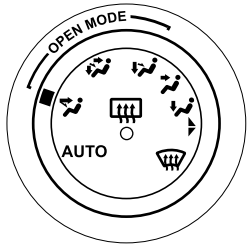

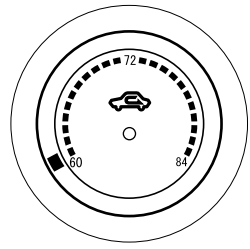

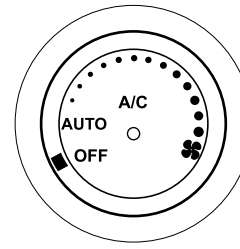

Manual Type*

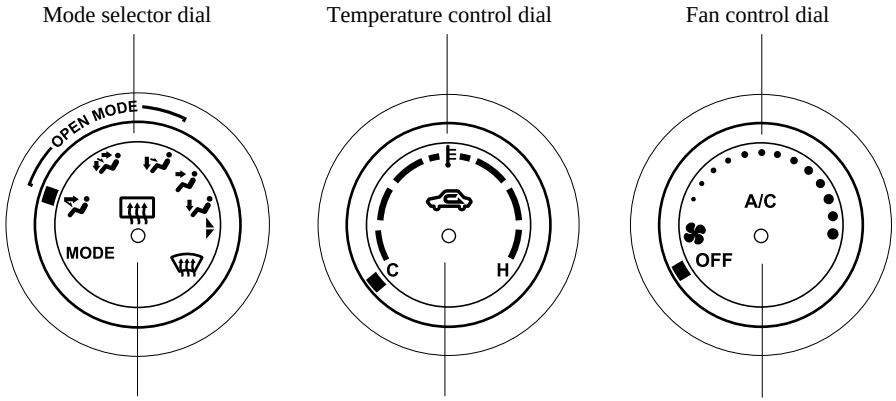

*Some models

▼Control Switches

Temperature control dial

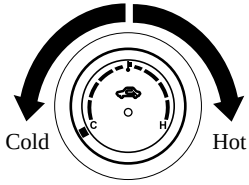

This dial controls temperature. Turn it clockwise for hot and counterclockwise for cold.

NOTE

When the mode is set to , or with the fan control dial in a position other than 0 and the temperature control dial in the maximum cold position, the air intake selector switches to the recirculated air mode and the A/C turns on automatically.
If A/C is not desired, press the A/C switch to turn it off.

Fan control dial

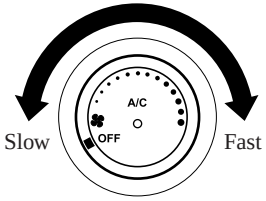

*Some models.

Turn the dial to adjust to the desired fan speed.
Turning the dial clockwise increases the fan speed.
Turning the dial counterclockwise decreases the fan speed.

Mode selector dial

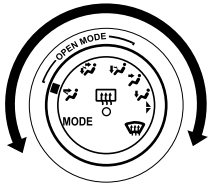

Turn the mode selector dial to select airflow mode (page 6-4).

NOTE
Turn the mode selector dial to an OPEN MODE position for maximum comfort while the roof is open.

A/C switch ✷

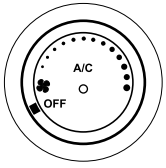

Press the A/C switch to turn the air conditioner on. The indicator light on the switch will illuminate when the fan control dial is in any position except OFF.

Press the switch once again to turn the air conditioner off.

NOTE
The air conditioner may not function when the outside temperature approaches 0 °C (32 °F).

Air intake selector

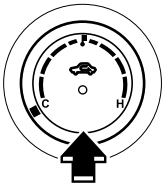

This switch controls the source of air entering the vehicle.

Press the switch to alternate between the outside air and recirculated air modes.

It is recommended that under normal conditions the switch be kept in the outside air mode.

Outside air mode (indicator light turned off)

Outside air is taken into the vehicle. Use this mode for normal ventilation and heating.

Recirculated air mode (indicator light illuminated)

Outside air is shut off. Air within the vehicle is recirculated.

This mode can be used when driving on a dusty road or in similar conditions. It also helps to provide quicker cooling of the interior.

✷Some models.

WARNING

Do not use the recirculated air mode in cold or rainy weather:

Using the recirculated air mode in cold or rainy weather is dangerous as it will cause the windows to fog up. Your vision will be hampered, which could lead to a serious accident.

▼Heating

1. Set the mode selector dial to the or position.
2. Set the temperature control dial to the hot position.
3. Set the fan control dial to the desired speed.

NOTE

- *If the windshield fogs up easily, set the mode selector dial to the position.*
- *If cooler air is desired at face level, set the mode selector dial at the position and adjust the temperature control dial to maintain maximum comfort.*
- *The air to the floor is warmer than air to the face (except when the temperature control dial is set at the extreme hot or cold position).*
- *In the , , or position, the air conditioner is automatically turned on (however, the indicator light does not illuminate) and the outside air mode is automatically selected to defrost the windshield.*
  In the or position, the outside air mode cannot be changed to the recirculated air mode.

▼Cooling (With Air Conditioner)*

1. Set the mode selector dial to the or position.
2. Set the temperature control dial to the cold position.
3. Set the fan control dial to the desired speed.
4. Turn on the air conditioner by pressing the A/C switch.
5. Adjust the fan control dial and temperature control dial to maintain maximum comfort.

CAUTION

When using the air conditioner while driving up long hills or in heavy traffic, closely monitor the temperature gauge (page 5-40). The air conditioner may cause engine overheating. If the gauge indicates overheating, turn the air conditioner off (page 7-18).

NOTE

- *When maximum cooling is desired, set the temperature control dial to the extreme cold position and set the air intake selector to the recirculated air mode, then turn the fan control dial fully clockwise.*
- *If warmer air is desired at floor level, set the mode selector dial at the or position and adjust the temperature control dial to maintain maximum comfort.*
- *The air to the floor is warmer than air to the face (except when the temperature control dial is set at the extreme hot or cold position).*

*Some models.

▼Ventilation

1. Set the mode selector dial to the ⁂ or ⁂ position.
2. Set the air intake selector to the outside air mode.
3. Set the temperature control dial to the desired position.
4. Set the fan control dial to the desired speed.

▼Windshield Defrosting and Defogging

1. Set the mode selector dial to the ⊛ position.
2. Set the temperature control dial to the desired position.
3. Set the fan control dial to the desired speed.

⚠ WARNING

Do not defog the windshield using the ⊛ position with the temperature control set to the cold position:

Using the ⊛ position with the temperature control set to the cold position is dangerous as it will cause the outside of the windshield to fog up. Your vision will be hampered, which could lead to a serious accident. Set the temperature control to the hot or warm position when using the ⊛ position.

NOTE

- *For maximum defrosting, set the temperature control dial to the extreme hot position and turn the fan control dial fully clockwise.*
- *If warm air is desired at the floor, set the mode selector dial to the ⚑ position.*
- *In the ⁂ , ⚑ , or ⊛ position, the air conditioner is automatically turned on (however, the indicator light does not illuminate) and the outside air mode is automatically selected to defrost the windshield.*
  In the ⚑ or ⊛ position, the outside air mode cannot be changed to the recirculated air mode.

▼Dehumidifying (With Air Conditioner)*

Operate the air conditioner in cool or cold weather to help defog the windshield and side windows.

1. Set the mode selector dial to the desired position.
2. Set the air intake selector to the outside air mode.
3. Set the temperature control dial to the desired position.
4. Set the fan control dial to the desired speed.
5. Turn on the air conditioner by pressing the A/C switch.

NOTE

One of the functions of the air conditioner is dehumidifying the air and, to use this function, the temperature does not have to be set to cold. Therefore, set the temperature control dial to the desired position (hot or cold) and turn on the air conditioner when you want to dehumidify the cabin air.

*Some models.

Automatic Type*

Type A

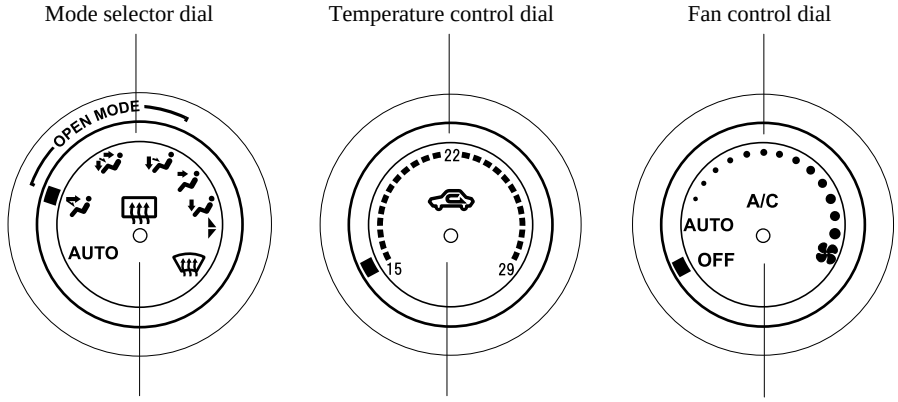

Type B

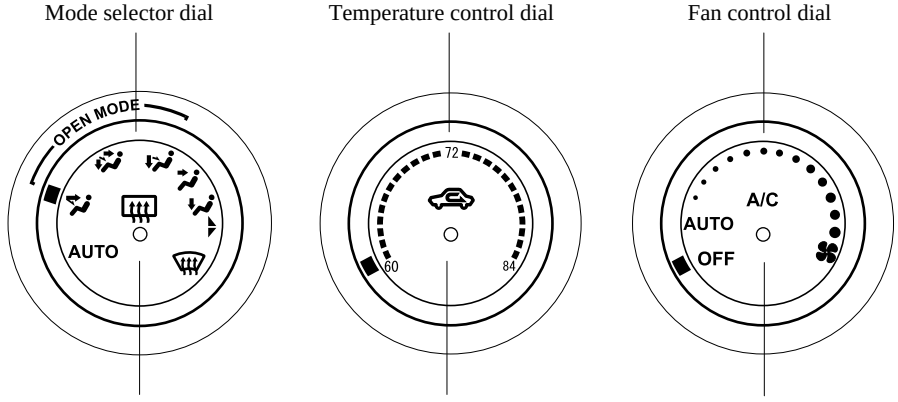

*Some models.

▼Control Switches

Temperature control dial

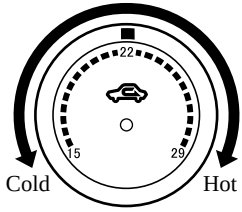

This dial controls temperature. Turn it clockwise for hot and counterclockwise for cold.

NOTE

- *Turn the dial completely left to set the temperature to maximum cooling, and completely right for maximum heating.*
- *When the mode is set to , or with the fan control dial in a position other than 0 and the temperature control dial in the maximum cold position, the air intake selector switches to the recirculated air mode and the A/C turns on automatically. If A/C is not desired, press the A/C switch to turn it off.*

Fan control dial

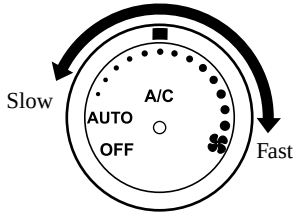

This dial allows variable fan speeds.

AUTO position

The amount of airflow will be automatically controlled in accordance with the set temperature.

Except AUTO position

The airflow amount can be adjusted to the desired level by turning the dial.

OFF position

To turn off the system, set the dial to OFF.

Mode selector dial

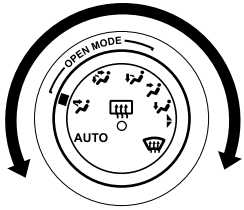

Turn the mode selector dial to select airflow mode (page 6-4).

AUTO position

The airflow mode automatically adjusts to the selected temperature.

Except AUTO position

The desired airflow position can be selected by turning the dial.

NOTE

With the airflow mode set to position and the temperature control dial set at a medium temperature, heated air is directed to the feet and a comparably lower air temperature will flow through the central, left and right vents.

A/C switch

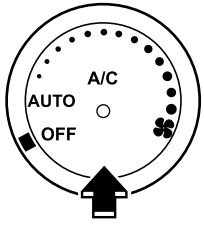

With the fan control dial ON, press the A/C switch to select the air conditioning (cooling/dehumidifying functions) on or off.

NOTE
The air conditioner may not function when the outside temperature approaches 0 °C(32 °F).

Air intake selector

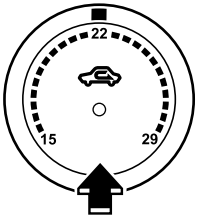

Outside or recirculated air positions can be selected. Press the switch to select outside/recirculated air positions.

Recirculated air position (indicator light illuminated)

Use this position when going through tunnels, driving in congested traffic (high engine exhaust areas) or when quick cooling is desired.

Outside air position (indicator light turned off)

Use this position for normal conditions and defogging.

⚠ WARNING

Do not use the position in cold or rainy weather:

Using the position in cold or rainy weather is dangerous as it will cause the windows to fog up. Your vision will be hampered, which could lead to a serious accident.

▼Operation of Automatic Air Conditioning

1. Set the mode selector dial to the AUTO position.
2. Set the air intake selector to the outside air position (indicator light turned off).
3. Set the temperature control dial to the desired position.
4. Set the fan control dial to the AUTO position.
5. Turn on the air conditioner.

To turn off the system, set the fan control dial to OFF.

NOTE
- *Setting the temperature to maximum high or low will not provide the desired temperature at a faster rate.*
- *To prevent cool air blowing from the vents when heating right after starting the engine, the amount of airflow is reduced until the air warms up.*
- *Turn the mode selector dial to an OPEN MODE position for maximum comfort while the roof is open. When the mode selector dial is turned to the AUTO position, OPEN MODE ( ) and ( ) vents will not be selected automatically. Select them manually.*

▼Windshield Defrosting and Defogging

Set the mode selector dial to the position and turn the fan control dial to the desired speed.
The outside air position is automatically selected. The air conditioner will automatically turn on and direct dehumidified air to the front windshield and side windows.

⚠ WARNING

Set the temperature control to hot or warm position when using the position:

Using the position with the temperature control set to the cold position is dangerous as it will cause the outside of the windshield to fog up. Your vision will be hampered, which could lead to a serious accident.

NOTE

Use the temperature control dial to increase the air flow temperature and defog the windshield more quickly.

▼Sunlight/Temperature Sensor

The automatic air conditioner function measures inside and outside temperatures, and sunlight. It then sets temperatures inside the passenger compartment accordingly.

⚠ CAUTION

Do not obstruct either sensor, otherwise the automatic air conditioner will not operate properly.

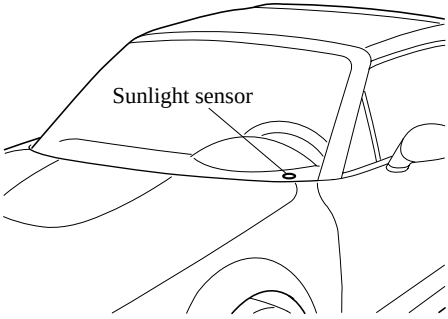

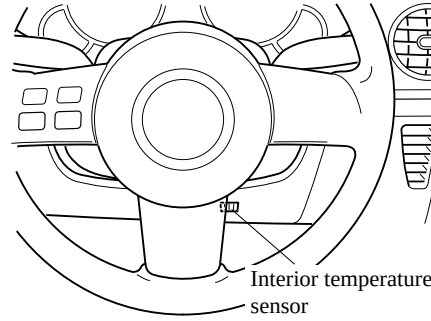

Antenna

▼AM/FM Radio Antenna

To remove the antenna, turn it counterclockwise.
To install the antenna, turn it clockwise. Make sure the antenna is securely installed.

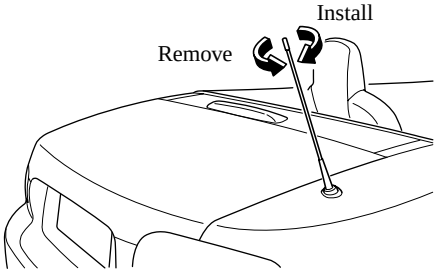

⚠ CAUTION

To prevent damage to the antenna, remove it before entering a car wash facility or passing beneath a low overhead clearance.

NOTE

When leaving your vehicle unattended, we recommend that you remove the antenna and store it inside the vehicle.

▼Satellite Radio Antenna*

The satellite radio antenna receives SIRIUS signals.

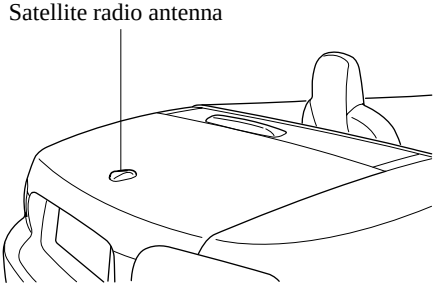

*Some models.

Operating Tips for Audio System

WARNING

Do not adjust the audio control switches while driving the vehicle:

Adjusting the audio while driving the vehicle is dangerous as it could distract your attention from the vehicle operation which could lead to a serious accident. Always adjust the audio while the vehicle is stopped. Even if the audio control switches are equipped on the steering wheel, learn to use the switches without looking down at them so that you can keep your maximum attention on the road while driving the vehicle.

CAUTION

For the purposes of safe driving, adjust the audio volume to a level that allows you to hear sounds outside of the vehicle including car horns and particularly emergency vehicle sirens.

NOTE

- *To prevent the battery from being discharged, do not leave the audio system on for a long period of time when the engine is not running.*
- *If a cellular phone or CB radio is used in or near the vehicle, it could cause noise to occur from the audio system, however, this does not indicate that the system has been damaged.*

▼Radio Reception

AM characteristics

AM signals bend around such things as buildings or mountains and bounce off the ionosphere. Therefore, they can reach longer distances than FM signals. Because of this, two stations may sometimes be picked up on the same frequency at the same time.

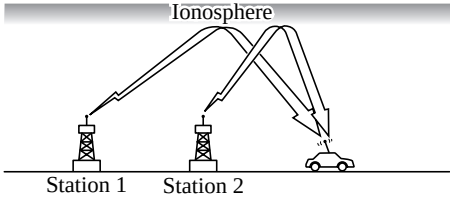

FM characteristics

An FM broadcast range is usually about 40 50 km (25 30 miles) from the source. Because of extra coding needed to break the sound into two channels, stereo FM has even less range than monaural (non-stereo) FM.

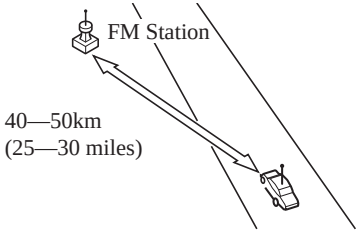

Signals from an FM transmitter are similar to beams of light because they do not bend around corners, but they do reflect. Unlike AM signals, FM signals cannot travel beyond the horizon. Therefore, FM stations cannot be received at the great distances possible with AM reception.

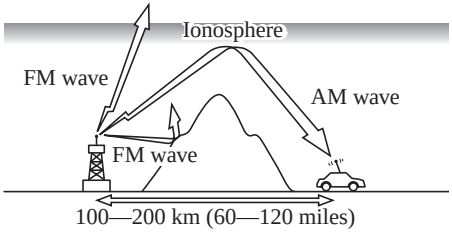

Atmospheric conditions can also affect FM reception. High humidity will cause poor reception. However, cloudy days may provide better reception than clear days.

Multipath noise

Since FM signals can be reflected by obstructions, it is possible to receive both the direct signal and the reflected signal at the same time. This causes a slight delay in reception and may be heard as a broken sound or a distortion. This problem may also be encountered when in close proximity to the transmitter.

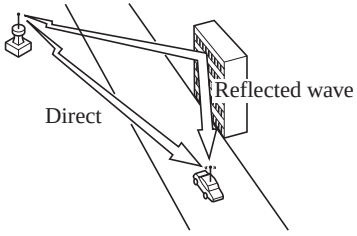

Flutter/Skip noise

Signals from an FM transmitter move in straight lines and become weak in valleys between tall buildings, mountains, and other obstacles. When a vehicle passes through such an area, the reception conditions may change suddenly, resulting in annoying noise.

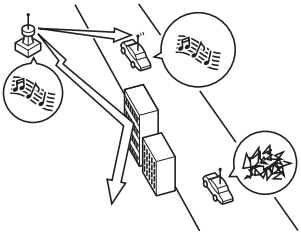

Weak signal noise

In suburban areas, broadcast signals become weak because of distance from the transmitter. Reception in such fringe areas is characterized by sound breakup.

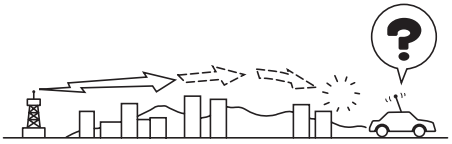

Strong signal noise

This occurs very close to a transmitter tower. The broadcast signals are extremely strong, so the result is noise and sound breakup at the radio receiver.

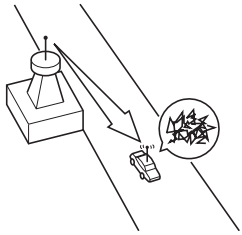

Station drift noise

When a vehicle reaches the area of two strong stations broadcasting at similar frequencies, the original station may be temporarily lost and the second station picked up. At this time there will be some noise from this disturbance.

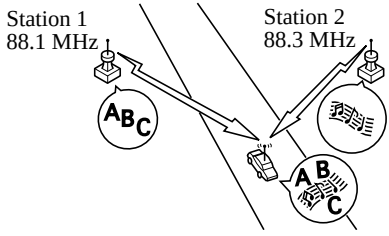

▼Operating Tips for CD Player/In-Dash CD Changer

Condensation phenomenon

Immediately after turning on the heater when the vehicle is cold, the CD or optical components (prism and lens) in the CD player/In-dash CD changer may become clouded with condensation. At this time, the CD will eject immediately when placed in the unit. A clouded CD can be corrected simply by wiping it with a soft cloth. Clouded optical components will clear naturally in about an hour. Wait for normal operation to return before attempting to use the unit.

Handling the CD player/In-dash CD changer

The following precautions should be observed.

- Do not spill any liquid on the audio system.

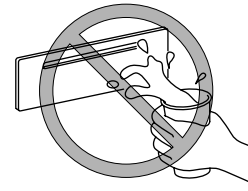

- Do not insert any objects, other than CDs, into the slot.

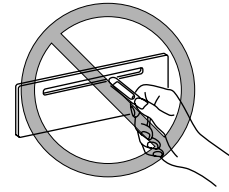

- The CD revolves at high speed within the unit. Defective (cracked or badly bent) CDs should never be used.

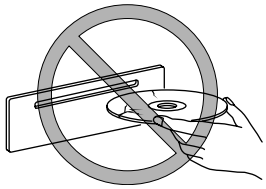

- Do not use non-conventional discs such as heart-shaped, octagonal discs, etc. The disc may not eject resulting in a malfunction.

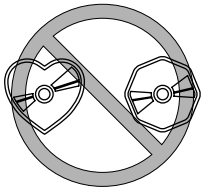

- If the memory portion of the CD is transparent or translucent, do not use the disc.

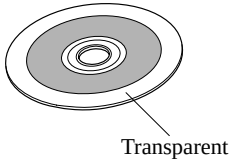

- A new CD may have rough edges on its inner and outer perimeters. If a disc with rough edges is used, proper setting will not be possible and the CD player/In-dash CD changer will not play the CD. In addition, the disc may not eject resulting in a malfunction. Remove the rough edges in advance by using a ball-point pen or pencil as shown below. To remove the rough edges, rub the side of the pen or pencil against the inner and outer perimeter of the CD.

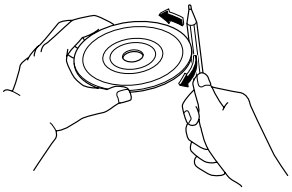

- When driving over uneven surfaces, the sound may jump.

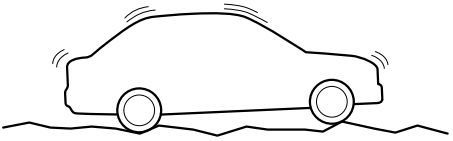

- The CD player/In-dash CD changer has been designed to play CDs bearing the identification logo as shown below. No other discs can be played.

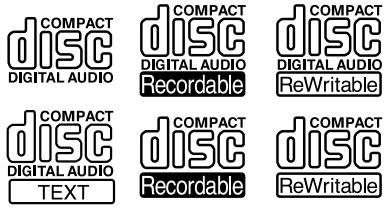

- Use discs that have been legitimately produced. If illegally-copied discs such as pirated discs are used, the system may not operate properly.
- Be sure never to touch the signal surface when handling the CDs. Pick up a CD by grasping the outer edge or the edge of the hole and the outer edge.

- Do not stick paper or tape on the CD. Avoid scratching the reverse side (the side without a label). The disc may not eject resulting in a malfunction.
- Dust, finger smudges, and dirt can decrease the amount of light reflected from the signal surface, thus affecting sound quality. If the CD should become soiled, gently wipe it with a soft cloth from the center of the CD to the edge.
- Do not use record sprays, antistatic agents, or household spray cleaners. Volatile chemicals such as benzine and thinner can also damage the surface of the CD and must not be used. Anything that can damage, warp, or fog plastic should never be used to clean CDs.
- Insert discs one by one. If two discs are inserted at the same time, the system may not operate properly.
- The CD player/In-dash CD changer ejects the CD if the CD is inserted upside down. Also dirty and/or defective CDs may be ejected.
- Do not insert cleaning discs in the CD player/In-dash CD changer.
- Do not insert any disc with a peel-off seal affixed to it.
- This unit may not be able to play certain CD-R/CD-RWs made using a computer or music CD recorder due to disc characteristics, scratches, smudges, dirt, etc., or due to dust or condensation on the lens inside the unit.
- Storing CDs in the vehicle exposed to direct sunlight or high temperature may damage the CD-R/CD-RWs, and make them unplayable.
- CD-R/CD-RW exceeding 700 MB cannot be played.
- This unit may not be able to play certain discs made using a computer due to the application (writing software) setting used. (For details, consult the store where the application was purchased.)
- It is possible that certain text data, such as titles, recorded on a CD-R/CD-RW may not be displayed when musical data (CD-DA) is playing.
- The period from when a CD-RW is inserted to when it begins playing is longer than a normal CD or CD-R.

- Completely read the instruction manual and cautions for CD-R/CD-RWs.
- Do not use discs with cellophane tape adhering, partially peeled off labels, or adhesive material exuding from the edges of the CD label. Also, do not use discs with a commercially-available CD-R label affixed. The disc may not eject resulting in a malfunction.

▼Operating tips for MP3

NOTE

Supply of this product only conveys a license for private, non-commercial use and does not convey a license nor imply any right to use this product in any commercial (i.e. revenue-generating) real time broadcasting (terrestrial, satellite, cable and/or any other media), broadcasting/streaming via the Internet, intranets and/or other networks or in other electronic content distribution systems, such as pay-audio or audio-on-demand applications. An independent license for such use is required. For details, please visit http://www.mp3licensing.com.

- This audio system handles MP3 files that have been recorded on CD-R/CD-RW/CD-ROMs. Discs that have been recorded using the following formats can be played:
  - ISO 9660 level 1
  - ISO 9660 level 2
  - Joliet extended format
  - Romeo extended format
- This unit handles MP3 files conforming to the MP3 format containing both header frames and data frames.
- This unit can play multi-session recorded discs that have up to 40 sessions.
- This unit can play MP3s with sampling frequencies of 16/22.05/24/32/44.1/48 kHz.
- This unit can play MP3 files that have been recorded in bit rates of 8 kbps to 320 kbps. Nonetheless, to insure enjoyment of music with consistent sound quality, it is recommended to use discs that have been recorded at a bit rate of 128 kbps or more.
- If a disc has both music data (CD-DA) and MP3 files, playback of the two file types differs depending on how the disc was recorded.
- Packet written discs cannot be played on this unit.
- This unit does not play CDs recorded using MP3i (MP3 interactive), MP3 PRO and RIFF MP3 formats.

About folders and files

- The order of hierarchy for MP3 files and folders during playback or other functions is from shallow to deep. The arrangement and playing order of a recorded disc containing MP3 files is as follows:
  - File number
    A numerical file number is assigned to each file in a folder in the order of hierarchy from shallow to deep.
  - Folder number
    A numerical folder number is assigned to each folder in the order of hierarchy from shallow to deep.

NOTE

Folders and tracks (files) within the same hierarchy play in the order they were written to the disc depending on the write software.

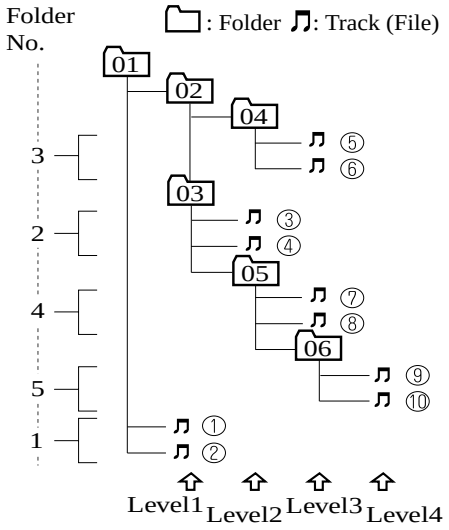

Playback may not occur in the above hierarchy depending on the audio unit.

- The folder order is automatically assigned and this order cannot be optionally set.
- Any folder without an MP3 file will be ignored. (It will be skipped and the folder number will not be displayed.)
- MP3 files not conforming to the MP3 format containing both header frames and data frames will be skipped and not played.
- This unit will play MP3 files that have up to eight levels. However, the more levels a disc has, the longer it will take to initially start playing. It is recommended to record discs with two levels or less.
- A single disc with up to 512 files can be played and a single folder with up to 255 files can be played.
- When naming an MP3 file, be sure to add an MP3 file extension (.mp3) after the file name.
- The maximum number of characters that can be used for file names is as follows. However, this unit will only display up to 32 characters, including the file extension (.mp3).

	Maximum number of characters in a file name (including a separator "." and the three letters of the file extension)
ISO9660 level 1	12*
ISO9660 level 2	31*
Joliet extended format	64
Romeo extended format	128

* English one-byte characters (capitalized only) and underbar "_" are available.

CAUTION

This unit can only play MP3 files that have an MP3 file extension (.mp3) attached. Do not attach an MP3 file extension to any other type file as it could cause noise to be emitted or a malfunction in the unit.

About ID3 Tag display

- This unit can only display ID3 Tag album, track and artist names that have been input using Ver.1.0/1.1/2.2/2.3 formats. Any other data that may have been input cannot be displayed.
- This unit can only display English (including numerals) one-byte characters. Use only English (including numerals) one-byte characters when inputting ID3 tags. Two-byte characters and some special symbols cannot be displayed.

Specialized glossary

MP3

Abbreviation for “MPEG Audio Layer 3”. A technical standard for audio compression as decided by an ISO (International Organization for Standardization) MPEG working group. Use of MP3 allows for audio data to be compressed to approximately a tenth of the source data size.

ISO 9660

An international standard for logical formatting of CD-ROM files and folders. It is divided into three separate levels based on differences in file naming procedures, data configuration and other characteristics.

Multi-session

A session is the complete amount of data recorded from the beginning to the end of a single period of CD-ROM, CD-R/CD-RW data recording. Multi-session refers to the existence of data from two or more sessions on a single disc.

Sampling

Refers to the process of encoding analog audio data at regular intervals and converting it to digital data. The sampling rate refers to the number of times a sample is taken in one second and is expressed in Hz units. Increasing the sampling rate improves the sound quality but also increases the data size.

Bit rate

Refers to the volume of data per second, expressed in bps (bits per second). Generally, the larger the number of the transfer bit rate when compressing an MP3 file, the more information regarding musical reproduction it carries, and therefore the better the sound quality.

Packet writing

A general term for the method, similar to that used for floppy discs or hard drives, of recording the required file in a single increment on a CD-R and similar.

ID3 Tag

ID3 tag is a method for storing information related to the music in an MP3 file. Information such as track, artist and album name can be stored. This content can be freely edited using ID3 editing function software.

VBR

Abbreviation for Variable Bit Rate. While CBR (Constant Bit Rate) is generally used, VBR varies the bit rate for audio compression according to compression conditions and this allows for compression with preference given to sound quality.

▼Operating Tips for WMA

WMA is short for Windows Media Audio and is the audio compression format used by Microsoft.
Audio data can be created and stored at a higher compression ratio than MP3.

* Microsoft and Windows Media are registered trademarks of Microsoft Corporation U.S. in the United States and other countries.

Playable WMA file specification

CD-R and CD-RW including WMA files can be played with this unit. Discs which conform to the following formats can be played.
Playable WMA files are as follows:

Item		Content
Specification		Windows Media Audio Version 7.0, 8.0, 9.0
Sampling frequency	Bit rate	32kHz. . . . . 32, 40, 48 kbps
		44.1kHz . . . . . 32, 48, 64, 80, 96, 128, 160, 192 kbps
		48kHz. . . . . 64, 96, 128, 160, 192 kbps
VBR (Variable Bit Rate)		Supported
Channel mode		Stereo/Monaural
WMA tag		Title, artist name, album name

⚠ CAUTION

This unit plays files with the (.wma) file extension as a WMA file. Do not use the WMA file extension for files other than WMA files. It may cause noise or a malfunction.

- In a WMA file, the track name, artist name and album name are recorded with data called “WMA-Tag”, and the information can be displayed.
- WMA files which do not comply with the specific standard may not be played correctly or its file and folder name may not be displayed correctly.
- The file extension may not be provided depending on the computer operating system, version, software, or settings. In this case, add the file extension “.wma” to the end of the file name, and then write the disc.

MEMO

Audio Set

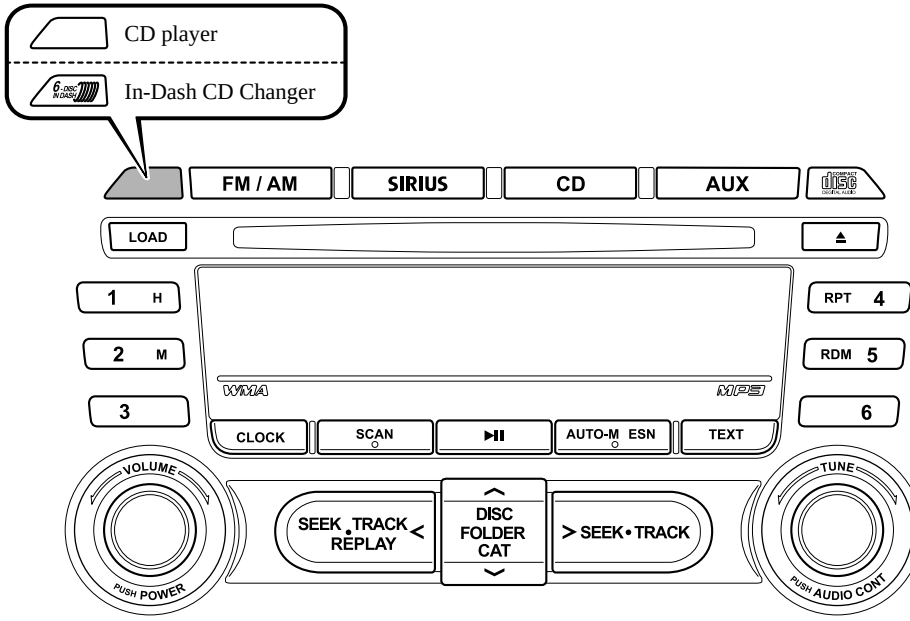

Power/Volume/Sound Controls ..... page 6-26
Clock ..... page 6-30
Operating the Radio ..... page 6-32
Operating the Satellite Radio ..... page 6-34
Operating the Compact Disc (CD) Player ..... page 6-46
Operating the In-Dash CD Changer ..... page 6-50
Operating the Auxiliary jack ..... page 6-54
Error Indications ..... page 6-55

▼Power/Volume/Sound Controls

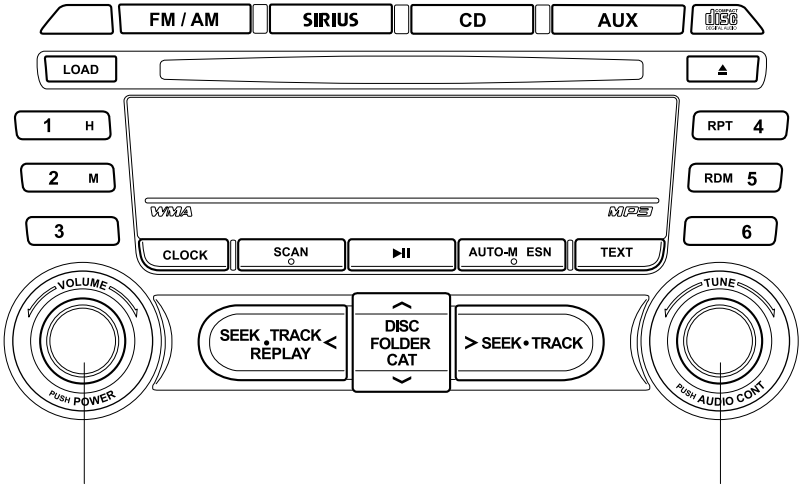

Power/Volume dial

Audio control dial

Power ON/OFF

Switch the ignition to ACC or ON.

Press the power/volume dial to turn the audio system on.
Press the power/volume dial again to turn the audio system off.

NOTE
To prevent the battery from being discharged, do not leave the audio system on for a long period of time when the engine is not running.

Volume adjustment

To adjust the volume, turn the power/volume dial.

Turn the power/volume dial to the right to increase volume, to the left to decrease it.

Audio sound adjustment

1. Press the audio control dial to select the function. The selected function will be indicated.

Standard audio-equipped model

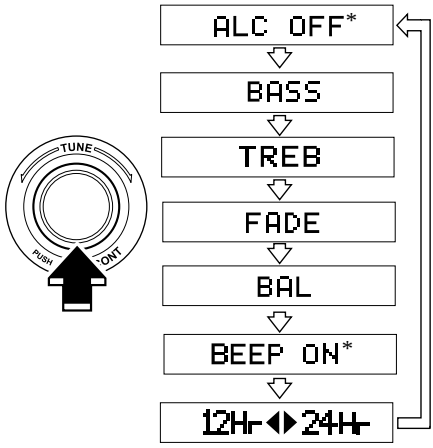

Bose® Sound System-equipped model

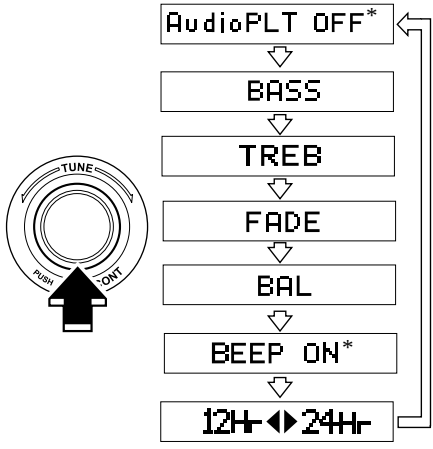

* Depending on the mode selected, the indication changes.

2. Turn the audio control dial to adjust the selected functions as follows:

Standard audio-equipped model

Indication	Turn Left	Turn Right
ALC	Select mode	
BASS	Decrease bass	Increase bass
TREB	Decrease treble	Increase treble
FADE	Shift the sound to the front	Shift the sound to the rear
BAL	Shift the sound to the left	Shift the sound to the right
BEEP	off	on
12Hr 24Hr	12Hr (Flashing)	24Hr (Flashing)

Bose® Sound System-equipped model

Indication	Turn Left	Turn Right
AudioPLT	off	on
BASS	Decrease bass	Increase bass
TREB	Decrease treble	Increase treble
FADE	Shift the sound to the front	Shift the sound to the rear
BAL	Shift the sound to the left	Shift the sound to the right
BEEP	off	on
12Hr 24Hr	12Hr (Flashing)	24Hr (Flashing)

NOTE

- *Depending on the type of audio unit, the order in which the functions appear differs.*
- *About 5 seconds after selecting any mode, the volume function will be automatically selected. To reset bass, treble, fade, and balance, press the audio control dial for 2 seconds. The unit will beep and "CLEAR" will be displayed.*

Automatic Level Control (ALC) (Standard audio-equipped model)

The automatic level control (ALC) is a feature that automatically adjusts audio volume and sound quality according to the vehicle speed.
The volume increases in accordance with the increase in vehicle speed, and decreases as vehicle speed decreases.

Select the desired ALC mode.

Mode	Volume change
ALC OFF	No change
ALC LEVEL1	Minimum
ALC LEVEL2	⬇ ⇧
ALC LEVEL3	⬇ ⇧
ALC LEVEL4	Medium
ALC LEVEL5	⬇ ⇧
ALC LEVEL6	⬇ ⇧
ALC LEVEL7	Maximum

Turn the audio control dial to select ALC OFF or ALC LEVEL1 7 modes. The selected mode will be indicated.

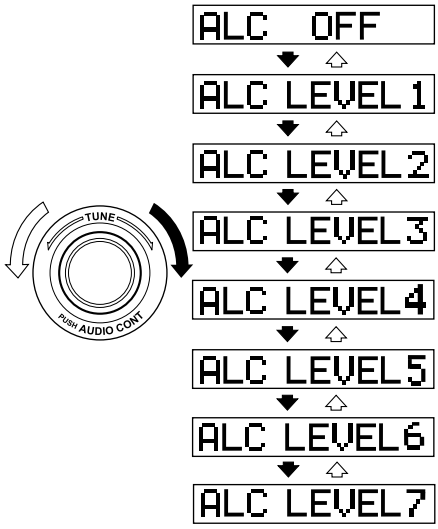

***AudioPilot® 2 (Bose® Sound System-equipped model)**

AudioPilot® 2 automatically adjusts audio volume and sound quality in accordance with the level of noise entering the vehicle interior while driving. When AudioPilot® 2 is turned on, the system automatically calculates the conditions for optimum hearing of sound which may be difficult to hear depending on exterior noise.

The system is also equipped to optimally adjust the acoustic characteristics automatically while the roof is open or closed. The acoustic adjustment occurs with the lock/unlock operation of the top latch on the roof, and while the adjustment is being done, the audio is muted for about 1.5 sec, and then fades in.

* AudioPilot® 2 is a registered trademark of Bose Corporation.

BEEP setting

The beep-sound when operating the audio system can be set on or off.

Time adjustment

Rotating the audio control dial switches the display between 12 and 24-hour clock time (page 6-30).

▼Clock

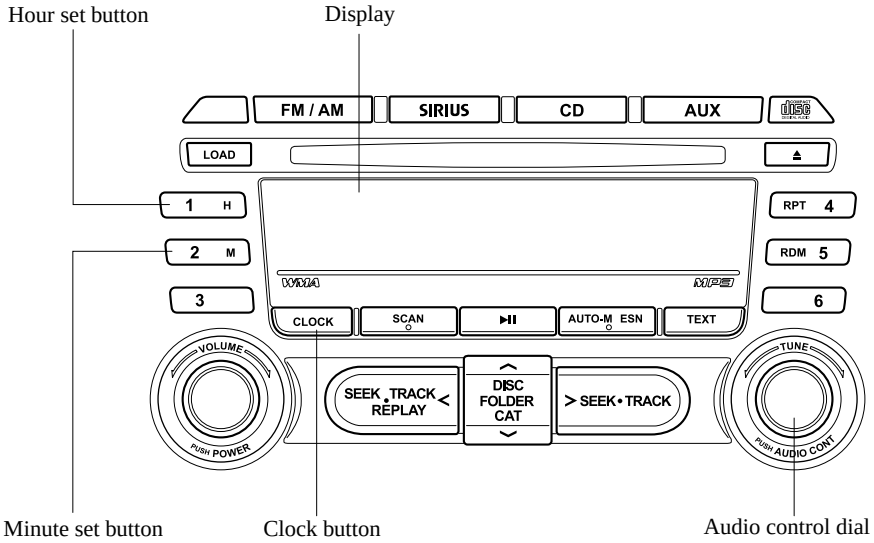

Setting the time

The clock can be set at any time when the ignition is switched to ACC or ON.

1. To adjust the time, press the clock button (CLOCK) for about 2 seconds until a beep is heard.
   The clock's current time will flash.
2. To advance the hours, press the hour set button (H). To advance the minutes, press the minute set button (M) while the time is flashing.
3. Press the clock button (CLOCK) again to start the clock.

NOTE

- *When the clock button (CLOCK) is released, the seconds are reset to "00".*
- *If the power supply to the unit is interrupted (if the fuse blows or the vehicle's battery is disconnected), the clock will need to be reset.*

MEMO

▼Operating the Radio

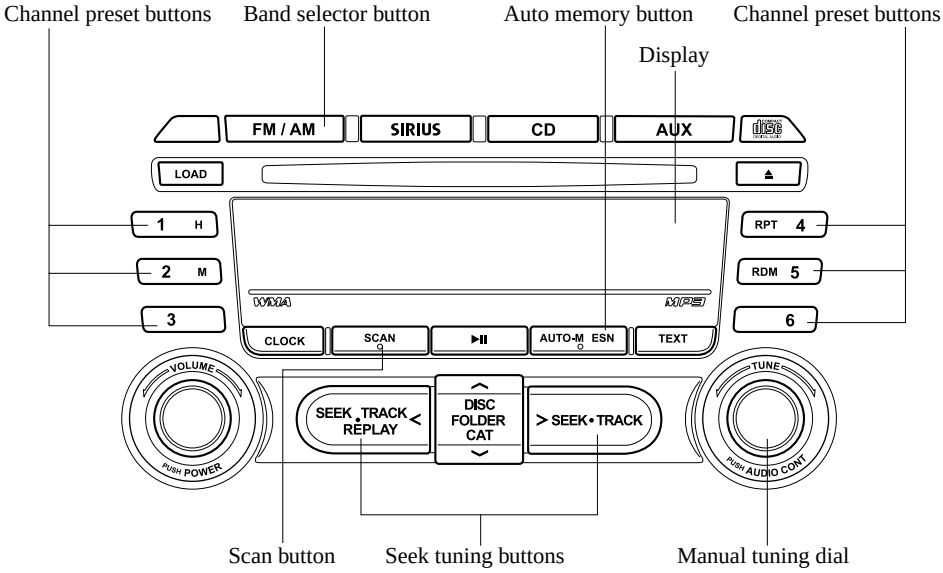

Radio ON

Press a band selector button (**FM/AM**) to turn the radio on.

Band selection

Successively pressing the band selector button (**FM/AM**) switches the bands as follows: FM1→FM2→AM.

The selected mode will be indicated. If FM stereo is being received, “ST” will be displayed.

NOTE

If the FM broadcast signal becomes weak, reception automatically changes from STEREO to MONO for reduced noise, and the “ST” indicator will go out.

Tuning

The radio has the following tuning methods: Manual, Seek, Scan, Preset channel, and Auto memory tuning. The easiest way to tune stations is to set them on preset channels.

NOTE

If the power supply is interrupted (fuse blows or the battery is disconnected), the preset channels will be erased.

Manual tuning

Turning the manual tuning dial will change the frequency higher or lower.

Seek tuning

Pressing the seek tuning button (> , <) will cause the tuner to seek a higher or lower frequency automatically.

NOTE
If you continue to press and hold the button, the frequency will continue changing without stopping.

Scan tuning

Press the scan button (**SCAN**) to automatically sample strong stations. Scanning stops at each station for about 5 seconds. To hold a station, press the scan button (**SCAN**) again during this interval.

Preset channel tuning

The 6 preset channels can be used to store 6 AM and 12 FM stations.

1. To set a channel first select AM, FM1, or FM2. Tune to the desired station.
2. Depress a channel preset button for about 2 seconds until a beep sound is heard. The preset channel number and station frequency will be displayed. The station is now held in the memory.
3. Repeat this operation for the other stations and bands you want to store. To tune one in the memory, select AM, FM1, or FM2 and then press its channel preset button. The station frequency and the channel number will be displayed.

NOTE
If the power supply is interrupted (fuse blows or the battery is disconnected), the preset channels will be erased.

Auto memory tuning

This is especially useful when driving in an area where the local stations are not known. Additional AM/FM stations can be stored without disturbing the previously set channels.

Press and hold the auto memory button (**AUTO-M**) for about 2 seconds until a beep sound is heard; the system will automatically scan and temporarily store up to 6 stations with the strongest frequencies in each selected band in that area.

After scanning is completed, the station with the strongest frequency will be tuned and its frequency displayed.
Press and release the auto memory button (**AUTO-M**) to recall stations from the auto-stored stations. One stored station will be selected each time; its frequency and channel number will be displayed.

NOTE
If no stations can be tuned after scanning operations, “A” will be displayed.

▼Operating the Satellite Radio*

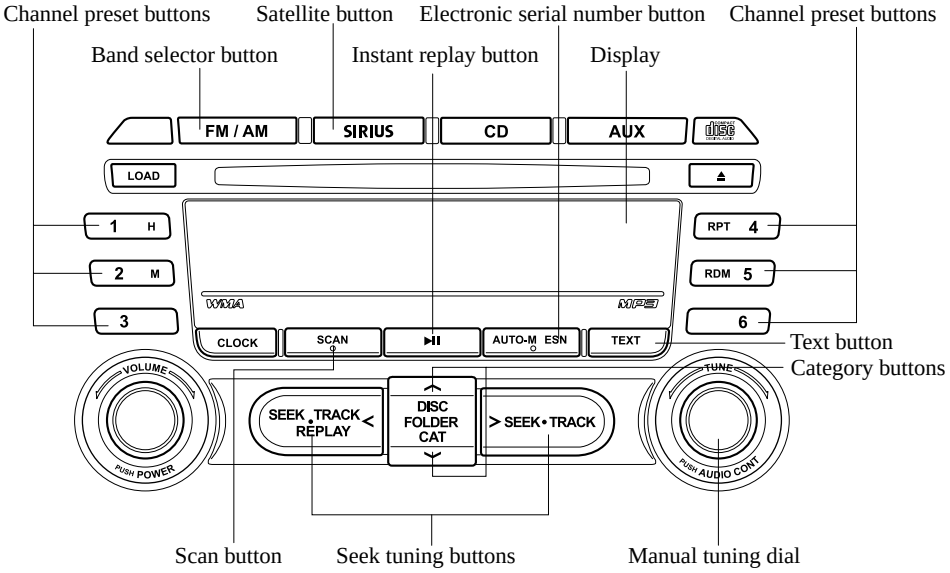

Information display

All operations of the satellite radio are displayed on the Information display.

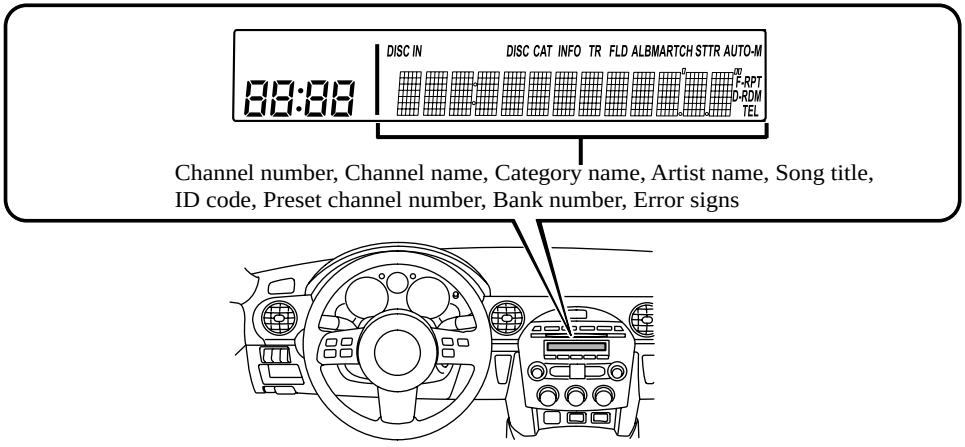

*Some models.

NOTE
This equipment has been tested and found to comply with the limits for a Class B digital device, pursuant to Part 15 of the FCC Rules. These limits are designed to provide reasonable protection against harmful interference in a residential installation. This equipment generates, uses, and can radiate radio frequency energy and if not installed and used in accordance with the instructions, may cause harmful interference to radio communications. However, there is no guarantee that interference will not occur in a particular installation. If this equipment does cause harmful interference to radio or television reception, which can be determined by turning the equipment off and on, the user is encouraged to try to correct the interference by one or more of the following measures:
- Increase the separation between the equipment and tuner.
- Connect the equipment into an outlet on a circuit different from that to which the tuner is connected.
- Consult the dealer or an experienced radio/TV technician for help.

What is satellite radio?

With over 130 channels, SIRIUS Satellite Radio brings you more of what you love. Get 69 channels of 100 % commercial-free music, plus all your favorite sports, news, talk and entertainment. Everything worth listening to is now on SIRIUS.
100 % Commercial-free Music With music from every genre, artist-dedicated channels, live performances and more, SIRIUS is the home of 100 % commercial-free music.
Live Sports Play-by-Play & Expert Talk Hear every NFL game, every NASCAR® race and college sports coverage from over 150 schools. Plus 24/7 sports talk with channels like SIRIUS NFL Radio, SIRIUS NASCAR Radio and more.
Exclusive Entertainment and Talk The biggest names, compelling talk, hilarious comedy. Hear Howard Stern, Martha Stewart, Jamie Foxx, Blue Collar Comedy, Playboy Radio, political talk and more.
World-class News Stay informed with FOX, CNN, CNBC, NPR®, BBC and more.
Plus local traffic and weather.
Family & Kids Entertain the entire family with Radio Disney, Kids Place Live, Laugh USA and more.

Sign up for SIRIUS Radio today! For more information, visit www.sirius.com. Satellite radio can be subscribed to and received in the United States. (Except Alaska and Hawaii) and Canada.

How to Activate Satellite Radio

You must call SIRIUS to activate your service. Activation is free and takes only a few minutes.

SIRIUS service uses an ID code to identify your radio. This code is needed to activate SIRIUS service, and report any problems.

To activate you SIRIUS radio tuner, call a SIRIUS customer service specialist at 1-888-539-7474 or you can visit SIRIUS online at www.sirius.com.

Please have the following information ready:
- SIRIUS ID (12-digit electronic serial no., or ESN*)
- Valid credit card information (may not be required at initial sign-up)

Be sure you are parked outside with a clear view of open sky, you will be instructed to turn on your radio (in SAT mode and tuned to channel 184). Activation typically takes only 2 5 minutes.
*ESN: Electronic Serial Number

SIRIUS operation

All operations of the satellite radio are conducted by means of the audio unit.

SIRIUS radio mode selection

When the satellite button is pressed during ACC ON, it will play the last SIRIUS channel in use before the mode was switched over to another mode or the power was turned off.
When the satellite button is pressed in a mode other than the SIRIUS mode, the last channel in use will be received.

Every time the satellite button is pressed, the bank changes in the order shown below.

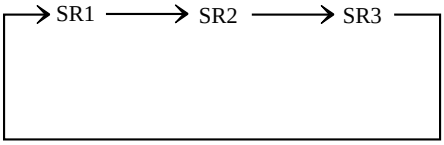

NOTE
SR1, SR2 and SR3: six stations can be stored in each bank for convenient access to your favorite stations.

Operation in the initial state

It may take some time to start up the equipment when it is in the initial state, when there is a change in the user's subscription condition, or when the SIRIUS channel map is changed. “UPDATING xx%” is displayed when the SIRIUS channel map is changed. If the unit is initialized or the user contract content is changed, “UPDATING” is displayed. Updating could take as long as three minutes depending on the geographical area. When the unit is in an initialized state, channel 184 is displayed after the display indicates “UPDATING 100%”. If the SIRIUS channel map or the user contract content is changed, the channel prior to the change is displayed after “UPDATING” is displayed. After the initialization display, it may take as long as 12 seconds to receive channel 184.

NOTE
Do not perform the following operation while "UPDATING" is displayed. Otherwise, the updating procedure will be cancelled.
- *Turning off the audio power*
- *Switching to other modes*
- *Switching the ignition off*

When the SIRIUS mode is switched to another mode, or when the power is turned off, the present channel which is being received is stored as the last channel.

Channel selection

Turning the manual tuning dial allows you to select the desired receiving channel.
- Turn the knob clockwise: Channel Up
- Turn the knob counterclockwise: Channel Down

Unsubscribed channel

When a selected station has not been subscribed to, the display indicates the following:
[CALL + 888] and [539 + SIRI]
(Flashes alternately)

NOTE
When the subscription contract is canceled, all of the channels including channel 184 appear as unsubscribed.

Invalid channel

When a selected channel is not broadcasting, [SR + (bank number)+ INVALID] is displayed for one second, followed by [SR + (bank number)+ CHANNEL], which is also displayed for one second. The display then returns to the previous valid channel.

NOTE
If the last channel selected has become unavailable because of a channel update the above indication is displayed until any button is pressed.

Preset channel programming

(Programming with "channel number" display)

1. Select the desired channel to be programmed. At this point, the following is displayed:
   [SR + (bank number)+ (channel number)]
2. Keep pressing the channel preset button for 1.5 seconds or more.
   The programming process is complete after the channel number flashes. Then, [SR + (bank number)] is displayed and a beep sound is heard at the same time.
3. [SR + (bank number)+ CH + (preset number)+ (channel number)] are displayed.

(Programming with "text" display (e.g. channel name))

1. Select the desired channel to be programmed. At this point, the following is displayed:
   [SR + (bank number)+ (selected text (e.g. channel name))]
2. Keep pressing the channel preset button for 1.5 seconds or more.
   The programming process is complete after the text (e.g. channel name) flashes. Then, [SR + (bank number)] is displayed and you will hear beep sound at the same time.

3. SR + (bank number)+ CH + (preset number)+ (channel number)] are displayed.
4. Three seconds later, it returns to normal display. [SR + (bank number)+ (text (e.g. channel name))]

NOTE
Six stations can be stored in each bank, SR1, SR2, and SR3 for convenient access to your favorite stations.

Preset channel call-up

Press and release the channel preset button,
[SR + (bank number)+ CH + (preset number)+ (channel number)] appears.
When the preset button is pressed during text mode, its channel number is displayed first for three second and then its text is displayed.

NOTE
In the initial setting, all channels are preset to 184.

Category change

Press the category button (UP or DOWN) and select the desired category.
- Press the category button (UP): Category up
- Press the category button (DOWN): Category down

Every time the category (UP) button is pressed for 1.5 second or less, the category is changed over in the order shown below.
At this time, the lowest (smallest-number) channel within the category indicated is received.
When the highest (or lowest) category is reached, the category is changed over in the order shown below.

Highest category → All categories → Lowest category

NOTE
While all categories are selected, all channels covering a category can be accessed (Category off condition).

Channel selection within a category

If you are in a selected category and the channel number is displayed, turning the manual tuning dial moves the channel number up/down in that category.
- Turn the manual tuning dial clockwise: Channel Up
- Turn the manual tuning dial counterclockwise: Channel Down

NOTE
The channel number needs to be indicated in the display to use manual tuning dial for this function.

Scan tuning

Press the scan button (**SCAN**) to automatically sample stations. Scanning stops at each station for about five seconds. To hold a station, press the scan button (**SCAN**) again during this interval.

NOTE
- *Unsubscribed channels, invalid channels and parental lock channels are not subject to the scan, therefore these channels will skip automatically.*
- *You can scan all channels while all categories are selected. If you are in a selected category, you can only scan the channels in that category.*

Channel number, channel name, category, artist, song titles and info display

Each time the text button is pressed during SIRIUS reception, the display of the text data is changed over in the order shown below.

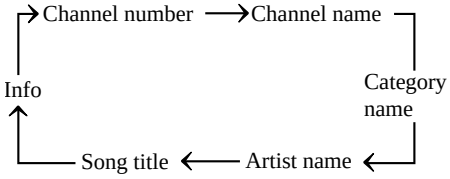

NOTE

- *Ten characters are displayed on one screen.*
- *To display the rest of the characters of a long title, press and hold the text button (TEXT). The display scrolls the next ten characters. Press and hold the text button (TEXT) again after the last ten characters have been displayed to return to the beginning of the title.*

(Channel number display)

- When the text button is pressed while in info display mode, the mode changes to the channel number display mode.

(Channel name display)

- When the text button is pressed while in channel number display mode, it changes to channel name display mode.
- There are short (eight fixed characters) and long names for the channel name.
- The long name is displayed first, and three seconds later the short name is displayed. If there is no short name, the long name is displayed.
- To display the rest of the characters of the channel name, press and hold the text button (TEXT). The display scrolls the next ten characters. Press and hold the text button (TEXT) again after the last ten characters have been displayed to return to the beginning of the title.
- Press and hold the text button while the short name is displayed to switch the display to the long name.
- Three seconds after scrolling the long name, the display automatically returns to the first part of the long name. Three more seconds and the short name appears.
- If there is no channel name, “NO TITLE” is displayed.

(Category name display)

- When the text button is pressed while in channel name display mode, it changes to the category name display mode.
- There are short (eight fixed characters) and long names for the category name.
- The long name is displayed first, and three seconds later the short name is displayed. If there is no short name, the long name is displayed.
- To display the rest of the characters of the category name, press and hold the text button (TEXT). The display scrolls the next ten characters. Press and hold the text button (TEXT) again after the last ten characters have been displayed to return to the beginning of the title.

- Press and hold the text button while the short name is displayed to switch the display to the long name.
- Three seconds after scrolling the long name, the display automatically returns to display the first part of the long name. Three more seconds and the short name appears.
- If there is no category name, “NO CATEGORY” is displayed.

(Artist name display)

- When the text button is pressed while in category name display mode, it changes to the artist name display mode.
- To display the rest of the characters of the artist's name, press and hold the text button (TEXT). The display scrolls the next ten characters. Press and hold the text button (TEXT) again after the last ten characters have been displayed to return to the beginning of the title.
- Three seconds after scrolling the artist name, the display automatically return to display the first part of the artist's name.
- If there is no artist's name, “NO ARTIST” is displayed.

(Song title display)

- When the text button is pressed while in artist name display mode, it changes to the song title display mode.
- To display the rest of the characters of the song title, press and hold the text button (TEXT). The display scrolls the next ten characters. Press and hold the text button (TEXT) again after the last ten characters have been displayed to return to the beginning of the title.
- Three more seconds after scrolling the song title, the display automatically returns to display the first part of the song title.
- If there is no song title, “NO SONG” is displayed.

(INFO (such as composer's name) display)

- When the text button is pressed while in song title display mode, it changes to the INFO display mode.
- To display the rest of the characters of the composer's name, press and hold the text button (TEXT). The display scrolls the next ten characters. Press and hold the text button (TEXT) again after the last ten characters have been displayed to return to the beginning of the title.
- Three seconds after scrolling the text, the display automatically returns to display the first part of the text.
- If there is no composer name, “NO INFO” is displayed.

Instant replay

This function allows you to rewind and replay the program that you were previously or are currently listening to.
Press the instant replay button (▶II).
When the seek tuning button (<) is pressed (about 1.5 seconds), playback starts from the beginning of the current program.
When the seek tuning button (<) is pressed twice, playback starts from the beginning of the previous program.
When the seek tuning button (<) is pressed for about 1.5 seconds or longer, the program is reversed while the button is being pressed.

When the seek tuning button (>) is pressed (about 1.5 seconds), playback starts from the beginning of the next program. When the seek tuning button (>) is pressed (about 1.5 seconds) while the last program is being played, the instant replay mode is cancelled.
When the seek tuning button (>) is pressed for 1.5 seconds or longer, the program is fast-forwarded while the button is being pressed. When pressing and holding the button until the end of the program, the instant replay mode is cancelled.
When the instant replay button is pressed again, playback is paused, or playback starts if it has been paused.

Instant replay (PAUSE)

If the instant replay button is pressed while the instant replay mode is off, instant replay mode is turned on in a paused condition (PAUSE). Press the instant replay button again to resume playback from the point at which it was paused.

NOTE

- *If the channel is changed, the instant replay buffer data is deleted.*
- *After turning on the power and switching to SIRIUS digital satellite radio mode, the instant replay mode is not available for several seconds after changing channels.*

Displaying the SIRIUS ID (ESN)

When the ESN button is pressed for 1.5 seconds or longer, a 12-digit Electronic Serial Number (ESN) for the SIRIUS tuner is displayed.

(If the SIRIUS ID (ESN) for the tuner does not display)

If “ESN + FAIL” is displayed after pressing the ESN button for 1.5 seconds or longer, contact an Authorized Mazda Dealer.

Initialization of ID code

If the registered ID code is forgotten, return the ID code to the default [0000] by performing the following steps:
Setting condition: SAT mode

(Master code input preparation)

1. Press and hold the scan button, then press channel preset button 4. Hold both buttons together for 1.5 seconds.
2. “ENTER PIN” appears for three seconds which indicates that it is in code input mode.
3. “SR1 - - - -” appears, which indicates that it is ready for code input.

(Master code input)

4. Input the master code using the channel preset buttons 1-4.
   (The master code is already set at the time of factory shipment.)

(Master code input determination)

5. Determine the master code which has been input by pressing the scan button.
6. “PIN CLEARED” appears which indicates that the master code input has been completed.
7. The ID code is set to the default [0000] and the initialization process is completed.

NOTE
Master code:
The Master Code is used to initialize or re-initialize the ID code in the event that the code is not set to [0000] and/or the personalized ID code is not known. The initialization process resets the ID code to [0000]. The master code can potentially defeat the intent of the security of the parental lock if it is located by persons not authorized by the owner to access certain channels.

SIRIUS Satellite Radio Master Code: [0913]

NOTE
- *When a numeric value other than the master code is input and the scan button is pressed, "SR1 Err" is displayed and then it returns to the "SR1 - - - -" display again.*
- *If an ID code is not input for ten seconds, "Err" is displayed and it returns to the former display.*
- *Channel preset buttons 1, 2, 3, 4 and the scan button are used for inputting the ID code. Buttons 5 and 6 cannot be used.*

Change of ID code

Setting condition: SAT mode
When changing the ID code, the new ID code is input after the previous one is input first.

(Registered ID code input)

1. Press and hold the scan button, then press channel preset button 5. Hold both buttons together for 1.5 seconds.
2. "ENTER PIN" appears for three seconds which indicates that it is in code input mode.
3. "SR1 - - - -" appears, which indicates that it is ready for code input.
4. Input the registered ID code using channel preset buttons 1-4.
   Example: When the registered ID code is "2323", input "2323". At this time "SR1 2323" is displayed.
   Press 1 for the first digit, 2 for the second, 3 for the third, and 4 for the last digit. For example, if your number is 2323, press 1 three times (includes 0), 2 four times, 3 three times, and 4 four times. If the display goes off while inputting, begin from Step 1.

NOTE
The registered ID code is the default [0000] at the time of factory shipment. If [0000] results in "Err" on the display, go to the "INITIALIZATION OF ID CODE" section to reset to [0000].

(Verification with the registered ID code)

5. Determine the input code by pressing the scan button.
6. If it does not match with the previously registered code, "SR1 Err" is displayed and then it returns to "SR1 - - - -".
7. If it matches with the previously registered code, "ENTER PIN" appears again and it switches to code input mode.
8. "SR1 - - - -" appears, and it is ready for input of the new ID code.

(New ID code input)

9. Input the new ID code using channel preset buttons 1-4.
   Example: If "1234" is input as the new code, "SR1 1234" is displayed.

(New ID code input determination)

10. Determine the new ID code which has been input by pressing the scan button.
11. “PIN CHANGED” appears for three seconds which indicates that the new ID code input has been completed.
12. It returns to the former display.

NOTE

- *If an ID code is not input for ten seconds, “Err” is displayed and it returns to the former display.*
- *Channel preset buttons 1, 2, 3, 4 and the scan button are used for input of the ID code. Buttons 5 and 6 cannot be used.*

Individual channel locking

If a channel is locked, the channel is muted.

NOTE

If the registered ID code is forgotten, return the ID code to the default [0000]. (See “INTIALIZATION OF ID CODE” section)

(Locking a channel)

1. Select a channel to be locked by turning the manual tuning dial. Example: Select channel 100

(Registered ID code input preparation)

2. Press and hold the scan button, then press channel preset button 6. Hold both buttons together for 1.5 seconds.
3. “ENTER PIN” appears for three seconds which indicates that it is in code input mode.
4. “SR1 - - - -” appears which indicates that it is ready for code input.

(Registered ID code input)

5. Input the registered ID code using channel preset buttons 1-4. Example: If the registered ID code is “2323”, input “2323”. At this time “SR1 2323” is displayed.

(Registered ID code input determination)

6. Determine the code which has been input by pressing the scan button.
7. If it does not match the registered code, “SR1 Err” is displayed and then it returns to “SR1 - - - -”.
8. If it matches the registered code, “SR1 LOCK” appears for three seconds which indicates that the code input has been completed.
9. “SR1 LOCK 100” appears which indicates that the parental lock is activated. At this time, mute is on and no sound is heard.

NOTE

- *If an ID code is not input for ten seconds, “Err” is displayed and it returns to the former display.*
- *Channel preset buttons 1, 2, 3, 4 and the scan button are used for input of the ID code. Buttons 5 and 6 cannot be used.*

Lock cancellation

Setting condition: SAT mode

(Releasing a locked channel)

1. Select a channel to be released by turning the manual tuning dial. Example: Select the locked channel (i.e. 100). At this time, “SR1 LOCK 100” is displayed.

(Registered ID code input preparation)

2. Press and hold the scan button, then press channel preset button 6. Hold both buttons together for 1.5 seconds.
3. “ENTER PIN” appears for three seconds which indicates that it is in code input mode.
4. “SR1 - - - -” appears, which indicates that it is ready for code input.

(Registered ID code input)

5. Input the registered ID code using channel preset buttons 1-4. Example: When the registered ID code is “2323”, input “2323”. At this time “SR1 2323” is displayed.

NOTE
If “Err” is displayed, go to the “INITIALIZATION OF ID CODE” section to reset the ID code to [0000].

(Registered ID code input determination)

6. Determine the input code by pressing the scan button.
7. If it does not match the registered code, “SR1 Err” is displayed and then it returns to “SR1 - - - -”.
8. If it matches the registered code, “SR1 UNLOCK” appears for three seconds which indicates that the code input has been completed.
9. “SR1 100” appears which indicates that the parental lock is off. At this time, sound is heard.

NOTE
- *If an ID code is not input for ten seconds, “Err” is displayed and it returns to the former display.*
- *Channel preset buttons 1, 2, 3, 4 and the scan button are used for input of the ID code. Buttons 5 and 6 cannot be used.*

MEMO

▼Operating the Compact Disc (CD) Player

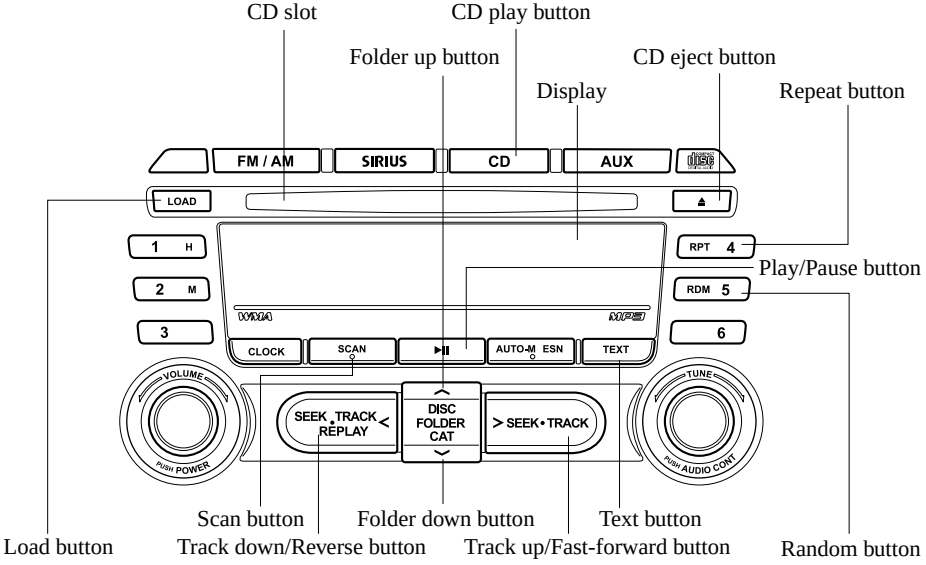

Type	Playable data
Music/MP3/WMA CD player	• Music data (CD-DA) • MP3/WMA file

NOTE
If a disc has both music data (CD-DA) and MP3/WMA files, playback of the two or three file types differs depending on how the disc was recorded.

Inserting the CD

Insert the CD into the slot, label-side up. The auto-loading mechanism will set the CD and begin play.

NOTE
There will be a short lapse before play begins while the player reads the digital signals on the CD.

Ejecting the CD

Press the CD eject button (⏏) to eject the CD.

Playback

Press the CD play button (CD) to start play when a CD is in the unit.
If a CD is not in the unit when the CD play button (CD) is pressed, “NO DISC” will flash on and off.

NOTE
When the load button (LOAD) is pressed, the CD will load and play even if the CD eject button (⏏) had been previously pressed.

Pause

To stop playback, press the Play/Pause button (▶II).
Press the button again to resume playback.

Fast-forward/Reverse

Press and hold the fast-forward button (>) to advance through a track at high speed.
Press and hold the reverse button (<) to reverse through a track at high speed.

Track search

Press the track up button (>) once to skip forward to the beginning of the next track.
Press the track down button (<) once to skip back to the beginning of the current track.

Folder search (during MP3/WMA CD playback)

To change to the previous folder, press the folder down button (∨), or press the folder up button (∧) to advance to the next folder.

Music scan

During music CD playback

This function scans the titles on a CD and plays 10 seconds of each song to aid you in finding a song you want to listen to.

During MP3/WMA CD playback

This function scans the titles in a folder currently being played and plays 10 seconds of each song to aid you in finding a song you want to listen to.

Press the scan button (SCAN) during playback to start the scan play operation (the track number will flash).
Press the scan button (SCAN) again to cancel scan playback.

NOTE
If the unit is left in scan, normal playback will resume where scan was selected.

Repeat playback

During music CD playback

1. Press the repeat button (RPT) during playback to play the current track repeatedly. “RPT” is displayed.
2. Press the button again to cancel the repeat playback.

During MP3/WMA CD playback

(Track repeat)

1. Press the repeat button (RPT) during playback to play the current track repeatedly. After “TRACK RPT” is displayed, “RPT” is displayed.
2. To cancel the repeat playback, press the button again after 3 seconds.

(Folder repeat)

1. Press the repeat button (RPT) during playback, and then press the button again within 3 seconds to play the tracks in the current folder repeatedly. After “FOLDER RPT” is displayed, “F-RPT” is displayed.
2. Press the button again to cancel the repeat playback.

Random playback

Tracks are randomly selected and played.

During music CD playback

1. Press the random button (RDM) during playback to play the tracks on the CD randomly. “RDM” is displayed.
2. Press the button again to cancel the random playback.

During MP3/WMA CD playback

(Folder random)

1. Press the random button (RDM) during playback to play the tracks in the folder randomly. After “FOLDER RDM” is displayed, “RDM” is displayed.
2. To cancel the random playback, press the button again after 3 seconds.

(CD random)

1. Press the random button (RDM) during playback, and then press the button again within 3 seconds to play the tracks on the CD randomly. After “DISC RDM” is displayed, “D-RDM” is displayed.
2. Press the button again to cancel the random playback.

Switching the display

For files with a file name and other information that have been input, the display switches between display of the file name and other information each time the text button (TEXT) is pressed during playback.

Music CD

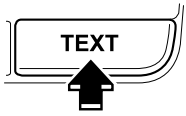

Track number/Elapsed time

Track name

Album name

Artist name

MP3/WMA CD

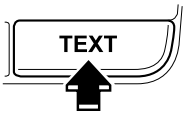

File number/Elapsed time

Folder number/File number

File name

Folder name

Album name (ID3 Tag)

Song name (ID3 Tag)

Artist name (ID3 Tag)

NOTE

- *The information viewable in the display is only CD information (such as artist name, song title) which has been recorded to the CD.*
- *The system can only display one-byte alphabetic characters. If two-byte or other types of characters have been recorded to the CD, they may not display correctly.*

Display scroll

Only 13 characters can be displayed at one time. To display the rest of the characters of a long title, press and hold the text button (TEXT). The display scrolls the next 13 characters. Press and hold the text button (TEXT) again after the last 13 characters have been displayed to return to the beginning of the title.

NOTE
The displayable number of characters is limited. If the number of characters, including the file extension (.mp3/.wma), exceeds 32 characters, it may not be fully displayed.

Message display

If “CHECK CD” is displayed, it means that there is some CD malfunction. Check the CD for damage, dirt, or smudges, and then properly reinsert. If the message appears again, take the unit to an Authorized Mazda Dealer for service.

▼Operating the In-Dash CD Changer

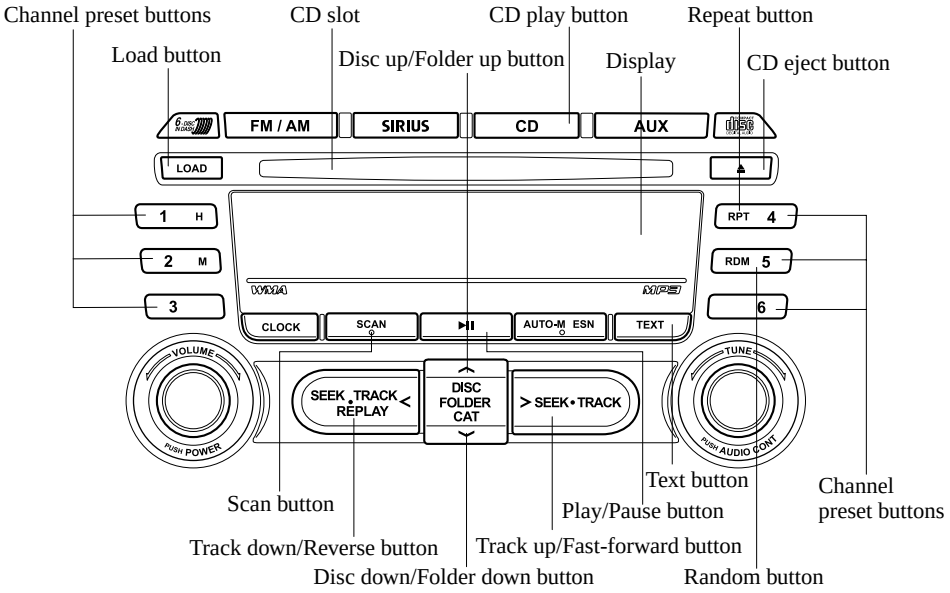

Type	Playable data
Music/MP3/WMA CD player	• Music data (CD-DA) • MP3/WMA file

NOTE

If a disc has both music data (CD-DA) and MP3/WMA files, playback of the two or three file types differs depending on how the disc was recorded.

Inserting the CD

The CD must be label-side up when inserting. The auto-loading mechanism will set the CD and begin play.

NOTE

The CD will begin playback automatically after insertion.
A CD cannot be inserted while the display reads "WAIT". A beeping sound can be heard during this waiting time.
There will be a short lapse before play begins while the player reads the digital signals on the CD.

Normal insertion

1. Press the load button (LOAD).
2. When "IN" is displayed, insert the CD.

Inserting CDs into desired tray number

1. Press and hold the load button (LOAD) for about 2 seconds until a beep sound is heard.

2. Press the channel preset button for the desired tray number while “WAIT” is displayed.
3. When “IN” is displayed, insert the CD.

NOTE
The CD cannot be inserted to the desired tray number if the number is already occupied.

Multiple insertion

1. Press and hold the load button (LOAD) for about 2 seconds until a beep sound is heard.
2. When “IN” is displayed, insert the CD.
3. When “IN” is displayed again, insert the next CD.

NOTE
The first-inserted CD will be played automatically when:
- *No other CD is inserted within 15 seconds after “IN” is displayed.*
- *The CD trays are full.*

Ejecting the CD

Normal ejection

1. Press the CD eject button (⏏). The disc number and “DISC OUT” will be displayed.
2. Pull out the CD.

NOTE
When the CD is ejected during play, the next CD will be played automatically.

Ejecting CDs from desired tray number

1. Press and hold the CD eject button (⏏) for about 2 seconds until a beep sound is heard.
   The “DISC OUT” display flashes.
2. Press the channel preset button for the desired CD number for less than 5 seconds after the beep sound is heard.
3. Pull out the CD.

Multiple ejection

1. Press and hold the CD eject button (⏏) for about 2 seconds until a beep sound is heard.
   The “DISC OUT” display flashes.
2. Pull out the CD, then the next CD will be ejected.

NOTE
- *CDs will be ejected starting with the one with the lowest number.*
- *All CDs in the tray will be ejected continuously.*
- *CDs can be ejected when the ignition is switched off. Press and hold the CD eject button (⏏) for about 2 seconds and all CDs will eject.*

Playback

Press the CD play button (CD) to start play when a CD is in the unit.
If a CD is not in the unit when the CD play button (CD) is pressed, “NO DISC” will flash on and off.

Pause

To stop playback, press the Play/Pause button (▶II).
Press the button again to resume playback.

Fast-forward/Reverse

Press and hold the fast-forward button (>) to advance through a track at high speed.
Press and hold the reverse button (<) to reverse through a track at high speed.

Track search

Press the track up button (>) once to skip forward to the beginning of the next track. Press the track down button (<) once to skip back to the beginning of the current track.

Disc search

During music CD playback

To change the disc, press the DISC button (∧ or ∨) during playback.

During MP3/WMA CD playback

To change the disc, press the DISC button (∧ or ∨) for 1.5 seconds or more during playback.

Folder search (during MP3/WMA CD playback)

To change to the previous folder, press the folder down button (∨) for less than 1.5 seconds, or press the folder up button (∧) for less than 1.5 seconds to advance to the next folder.

Music scan

During music CD playback

This function scans the titles on a CD and plays 10 seconds of each song to aid you in finding a song you want to listen to.

During MP3/WMA CD playback

This function scans the titles in a folder currently being played and plays 10 seconds of each song to aid you in finding a song you want to listen to.

Press the scan button (SCAN) during playback to start the scan play operation (the track number will flash).
Press the scan button (SCAN) again to cancel scan playback.

NOTE
If the unit is left in scan, normal playback will resume where scan was selected.

Repeat playback

During music CD playback

1. Press the repeat button (RPT) during playback to play the current track repeatedly. “RPT” is displayed.
2. Press the button again to cancel the repeat playback.

During MP3/WMA CD playback

(Track repeat)

1. Press the repeat button (RPT) during playback to play the current track repeatedly. After “TRACK RPT” is displayed, “RPT” is displayed.
2. To cancel the repeat playback, press the button again after 3 seconds.

(Folder repeat)

1. Press the repeat button (RPT) during playback, and then press the button again within 3 seconds to play the tracks in the current folder repeatedly. After “FOLDER RPT” is displayed, “F-RPT” is displayed.
2. Press the button again to cancel the repeat playback.

Random playback

Tracks are randomly selected and played.

During music CD playback

1. Press the random button (RDM) during playback to play the tracks in the CD randomly. “RDM” is displayed.
2. Press the button again to cancel the random playback.

During MP3/WMA CD playback

(Folder random)

1. Press the random button (RDM) during playback to play the tracks in the folder randomly. After “FOLDER RDM” is displayed, “RDM” is displayed.
2. To cancel the random playback, press the button again after 3 seconds.

(CD random)

1. Press the random button (RDM) during playback, and then press the button again within 3 seconds to play the tracks on the CD randomly. After “DISC RDM” is displayed, “D-RDM” is displayed.
2. Press the button again to cancel the random playback.

Switching the display

For files with a file name and other information that have been input, the display switches between display of the file name and other information each time the text button (TEXT) is pressed during playback.

Music CD

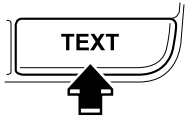

Disc number/Track number/Elapsed time

Track name

Album name

Artist name

MP3/WMA CD

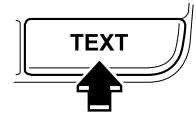

Disc number/File number/Elapsed time

Disc number/Folder number/File number

File name

Folder name

Album name (ID3 Tag)

Song name (ID3 Tag)

Artist name (ID3 Tag)

NOTE

- *The information viewable in the display is only CD information (such as artist name, song title) which has been recorded to the CD.*
- *The system can only display one-byte alphabetic characters. If two-byte or other types of characters have been recorded to the CD, they may not display correctly.*

Display scroll

Only 13 characters can be displayed at one time. To display the rest of the characters of a long title, press and hold the text button (TEXT). The display scrolls the next 13 characters. Press and hold the text button (TEXT) again after the last 13 characters have been displayed to return to the beginning of the title.

NOTE
The displayable number of characters is limited. If the number of characters, including the file extension (.mp3/.wma), exceeds 32 characters, it may not be fully displayed.

Message display

If “CHECK CD” is displayed, it means that there is some CD malfunction. Check the CD for damage, dirt, or smudges, and then properly reinsert. If the message appears again, take the unit to an Authorized Mazda Dealer for service.

▼Operating the Auxiliary jack

You can connect portable audio units, such as an MP3 player or similar products on the market, to the auxiliary jack to listen to music or audio over the vehicle's speakers. Refer to Auxiliary Input (page 6-58).

▼Error Indications

If you see an error indication on the display, find the cause in the chart. If you cannot clear the error indication, take the vehicle to an Authorized Mazda Dealer.

Indication	Cause	Solution
ACQUIRING	Depending on the surrounding conditions (such as large trees, buildings, or tunnels) and special weather conditions, SIRIUS radio reception may be diminished or temporarily interrupted.	Improve reception by moving away from possible obstructions. If the error indication continues to display, consult an Authorized Mazda Dealer.
ANTENNA FAIL	Satellite radio antenna malfunction	Check the satellite radio antenna, antenna cable and DLP antenna connector. If the error indication continues to display, consult an Authorized Mazda Dealer.
CHECK CD	CD is inserted upside down	Insert the CD properly. If the error indication continues to display, consult an Authorized Mazda Dealer.
	CD is defective	Insert another CD properly. If the error indication continues to display, consult an Authorized Mazda Dealer.

NOTE

If a broken DLP unit is replaced with a new unit, cancel the license for the broken unit and make sure to carry out new registration for the replaced unit. If the license for the broken unit is not canceled, you will be charged a reception fee for both units.*

* DLP: Down Link Processor (SATELLITE RADIO Module)

Audio Control Switch Operation*

When the audio unit is turned on, operation of the audio unit from the steering wheel is possible.

NOTE

Because the audio unit will be turned off under the following conditions, the switches will be inoperable.

- *When the ignition is switched off.*
- *When the power button on the audio unit is pressed and the audio unit is turned off.*
- *When the CD being played is ejected and the audio unit is turned off.*

Without Bluetooth Hands-Free

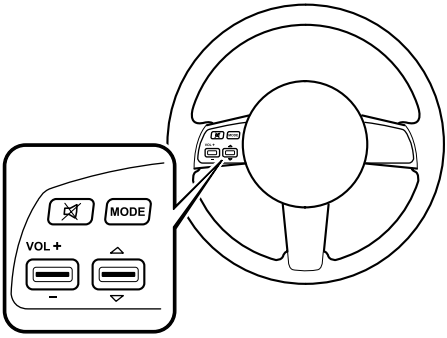

With Bluetooth Hands-Free

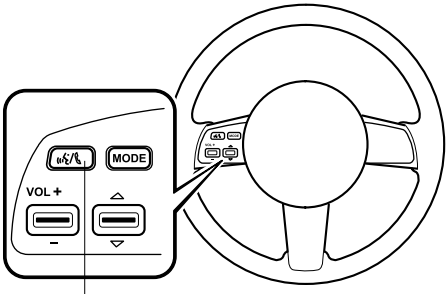

Voice recognition/hands-free switch

NOTE

- *The voice recognition/hands-free switch is operable with the audio unit turned off.*
- *Mazda has installed this system to prevent distraction while driving the vehicle and using audio controls on the dashboard. Always make safe driving your first priority.*

▼Adjusting the Volume

To increase the volume, press up the volume switch.

To decrease the volume, press down the volume switch.

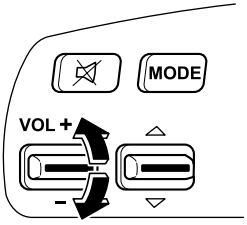

*Some models.

▼Changing the Source

Press the mode switch (MODE) to change the audio source (FM1 radio → FM2 radio → AM radio → CD player or CD changer → SIRIUS1 → SIRIUS2 → SIRIUS3 → AUX → cyclical).

* With the SIRIUS digital satellite radio, the mode which was selected last is displayed.

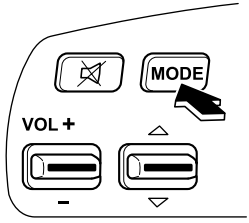

NOTE

CD, CD changer, and SIRIUS digital satellite radio modes cannot be selected in the following cases:

- *SIRIUS digital satellite radio unit is not equipped on the audio system.*
- *CD has not been inserted.*

Connect a portable audio unit or similar product on the market to the auxiliary jack to listen to music or audio over the vehicle's speakers. Change the audio source to AUX mode (page 6-58).

▼Seek Switch

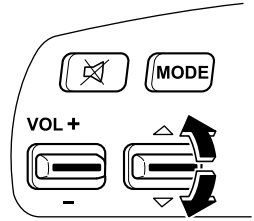

When listening to the radio or SIRIUS digital satellite radio

Press the seek switch up or down. The radio switches to the next/previous stored station in the order that it was stored (1 6).

(Radio)

Press and hold the seek switch in the up or down position to seek all usable stations at a higher or lower frequency whether programmed or not.

(SIRIUS digital satellite radio)

Press and hold the seek switch in the up or down position to seek all usable stations at a higher or lower channel whether programmed or not.

When playing a CD

Press the seek switch up to skip to the next track.
Press the seek switch down to repeat the current track.
Press and hold the seek switch in the up or down position to continuously switch the tracks up or down.

▼Mute Switch*

Press the mute switch (🔇) once to mute audio, press it again to resume audio output.

NOTE
If the ignition is switched off with the audio muted, the mute will be canceled.
Therefore, when the engine is restarted, the audio is not muted. To mute the audio again, press the mute switch (🔇).

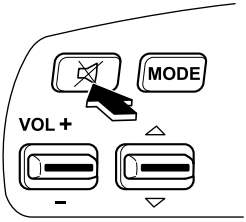

AUX Mode (Auxiliary input)

You can connect portable audio units, such as an MP3 player or similar products on the market, to the auxiliary jack to listen to music or audio over the vehicle's speakers.

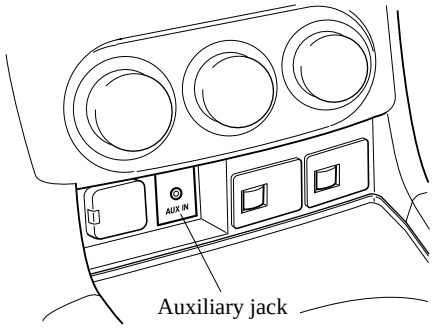

⚠ WARNING

Do not adjust the portable audio unit or a similar product while driving the vehicle:

Adjusting the portable audio unit or a similar product while driving the vehicle is dangerous as it could distract your attention from the vehicle operation which could lead to a serious accident. Always adjust the portable audio unit or a similar product while the vehicle is stopped.

Do not allow the connection plug cord to get tangled with the parking brake or the shift lever:

Allowing the plug cord to become tangled with the parking brake or the shift lever is dangerous as it could interfere with driving, resulting in an accident.

*Some models.

⚠ CAUTION

Depending on the portable audio device, noise may occur when using the device with it connected to the accessory socket equipped on the vehicle. (If noise occurs, do not use the accessory socket.)

NOTE

- *Before using the auxiliary jack, read the manufacturer's instructions for the product being connected.*
- *Use a commercially-available, non-impedance (3.5 ϕ) stereo mini plug for connecting the portable audio unit to the auxiliary jack. Before using the auxiliary jack, read the manufacturer's instructions for connecting a portable audio unit to the auxiliary jack.*
- *To prevent discharging of the battery, do not use the auxiliary input for long periods with the engine off or idling.*
- *Noise may occur depending on the product connected to the auxiliary jack.*
- *With regard to connecting a portable audio or similar device to a power source, use the battery for the device, not the accessory socket.*
- *Insert the plug to the auxiliary jack securely.*
- *Insert or remove the plug with the plug perpendicular to the auxiliary jack hole.*
- *Insert or remove the plug by holding its base.*

To listen to a portable audio unit

1. Switch the ignition to ACC or ON.
2. Insert the connection plug into the auxiliary jack.
3. Press the power/volume dial to turn the audio system on.
4. Press the AUX button (AUX) of the audio unit or the mode switch (MODE) of the audio control switches on the steering wheel to change to the AUX mode.

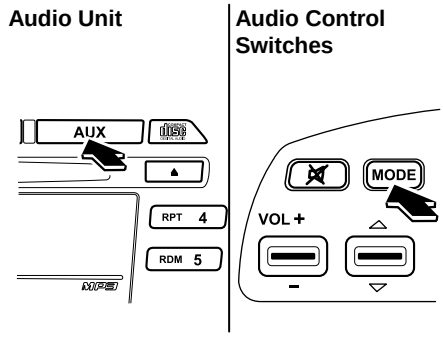

NOTE

- *Set the volume of the portable audio unit to the maximum within the range that the sound does not become distorted, then adjust the volume using the power/volume dial of the audio unit or the volume switch (+ , −) of the audio control switch.*
- *Audio adjustments other than audio volume can only be done using the portable audio device.*
- *If the connection plug is pulled out from the auxiliary jack while in AUX mode, noise may occur.*

Safety Certification

This CD player is made and tested to meet exacting safety standards. It meets FCC requirements and complies with safety performance standards of the U.S. Department of Health and Human Services.

⚠ CAUTION

- *This CD player should not be adjusted or repaired by anyone except qualified service personnel.*
  If servicing is required, contact an Authorized Mazda Dealer.
- *Use of controls or adjustments or performance of procedures other than those specified herein may result in hazardous laser exposure. Never operate the CD player with the top case of the unit removed.*
- *Changes or modifications not expressly approved by the party responsible for compliance could void the user's authority to operate this equipment.*

NOTE

For CD player section:
This device complies with part 15 of the FCC Rules. Operation is subject to the following two conditions: (1) This device may not cause harmful interference, and (2) this device must accept any interference received, including interference that may cause undesired operation.

NOTE

This equipment has been tested and found to comply with the limits for a Class B digital device, pursuant to part 15 of the FCC Rules. These limits are designed to provide reasonable protection against harmful interference in a residential installation. This equipment generates, uses, and can radiate radio frequency energy and, if not installed and used in accordance with the instructions, may cause harmful interference to radio communications. However, there is no guarantee that interference will not occur in a particular installation.

Bluetooth Hands-Free*

▼What is Bluetooth Hands-Free?

Bluetooth Hands-Free Outline

By connecting a Bluetooth equipped mobile telephone to the hands-free unit equipped on the vehicle, making and receiving calls are possible using the voice recognition/hands-free switch located on the steering wheel, and saying the voice commands.

⚠ WARNING

Perform phonebook registration related operations while the vehicle is parked:

Performing phonebook registration while driving the vehicle could be a distraction to your driving and result in an unexpected accident. In addition, a mistake in performing the phonebook operation could result in the loss of important data.

Bluetooth equipped mobile telephone

A Bluetooth equipped mobile telephone communicates with the hands-free unit equipped on the vehicle using radio transmission (Bluetooth).
For example, if the mobile telephone is placed in a coat pocket, the phone calls can be made through your mobile service without taking out and handling the mobile telephone.

⚠ CAUTION

The types of mobile phones which can be connected to the hands-free unit are limited. Therefore, before purchasing or changing your mobile phone model, consult Mazda Bluetooth Hands-Free Customer Service or visit www.MazdaUSA.com/bluetooth for a complete list of compatible phones.
Mobile phones which can be connected to the hands-free system need to be compliant with Bluetooth specifications and the appropriate profile. However, even among these Bluetooth phones are some which will not connect with your Mazda or will have limited function. Therefore, consult Mazda Bluetooth Hands-Free Customer Service for information regarding mobile phone compatibility:
Phone: 800-430-0153
Web: www.MazdaUSA.com/bluetooth

Applicable Bluetooth specification
Ver. 1.1 or higher
Response profile
- HFP (Hands Free Profile) Ver. 1.0
- DUN (Dial-up Networking Profile) Ver. 1.1

Bluetooth®

Bluetooth is the registered trademark of Bluetooth SIG. Inc.

*Some models.

NOTE

- *The Bluetooth Hands-Free system is operable several seconds after the ignition is switched to ACC or ON (requires less than 15 seconds).*
- *If the ignition is switched off during a hands-free call, the line is transferred to the mobile telephone automatically.*
- *If the mobile telephone is in a location where radio reception is difficult such as a metal container or in the trunk, the call may not be connected using Bluetooth. If communication is not possible, change the location of the mobile telephone.*

▼Component parts

Bluetooth Hands-Free consists of the following items:

- Voice Recognition/Hands-Free switch
- Information display
- Microphone
- Audio unit

Voice Recognition/Hands-Free switch

Basic functions of Bluetooth Hands-Free can be used for such things as making calls or hanging up using the voice recognition/hands-free switch on the steering wheel.

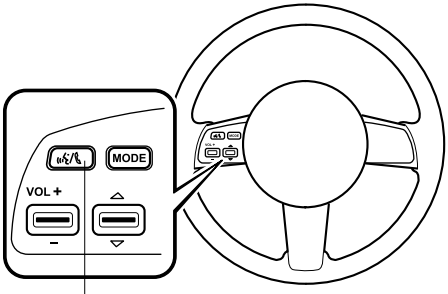

Voice Recognition/Hands-Free switch operations

A short press or a long press of the voice recognition/hands-free switch is used to operate the system as follows:

- Short press (Press the button less than 0.7 sec.)
- Long press (Press the button 0.7 sec. or more.)

Information display

When available, the information display shows telephone numbers, Bluetooth Hands-Free messages, and operation status.

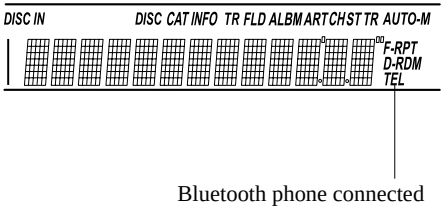

Microphone

The microphone is used for speaking voice commands or exchanging conversation.

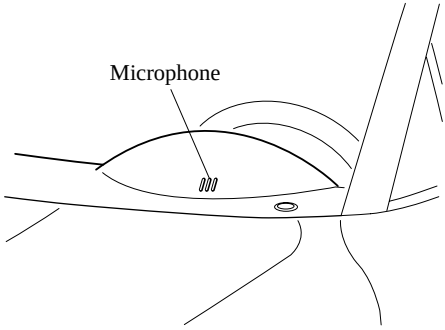

Audio unit

The audio unit is used for adjusting the volume.

▼Voice

To prevent the deterioration in voice recognition rate and voice quality, the following points must be observed:

- It is not necessary to face the microphone or approach it. Speak the voice commands while maintaining a safe driving position.
- Close the windows and/or the moonroof to reduce loud noises from outside the vehicle, or turn down the airflow of the climate control system while Bluetooth Hands-Free is being used. Voice recognition may not function correctly or voice quality may deteriorate under the following conditions.
  - A passenger is speaking.
  - Driving with the window and/or the moonroof open.
  - Driving on bumpy roads.
  - Noise outside of the vehicle is loud. (Construction sites, inside tunnels, excess oncoming traffic, or heavy rain.)
  - Operation noise from turn signals, wipers, or the horn is heard.
  - A/C airflow is strong or wind is blowing on the microphone.
  - There is noise coming from cargo loaded in the vehicle.
- Voice commands may not be recognized depending on the voice. If the voice commands are not recognized correctly, repeat the commands in a louder voice, at a natural pace, as if speaking to another person.
- Dialects or different wording other than hands-free prompts cannot be recognized by voice recognition. Speak in the wording specified by the voice commands.

NOTE

If the voice recognition performance is not satisfactory, refer to “Voice Recognition Learning Function (Speaker Enrollment)” (page 6-76).

Please be aware that the voice recognition may still make an error despite following the above points.

▼Function restrictions while using Bluetooth Hands-Free

Some functions are limited while Bluetooth Hands-Free is being used. They include:

- Beep sound and voice guidance related to the audio unit are not heard.
- Beep sound related to the A/C operation is not heard.

▼How to use this section

Descriptions in the text are as follows:
Say: Voice commands to be spoken by you.
Prompt: Voice guidance output from the speaker.

NOTE

Say voice commands after the beep sound [Beep] is heard.

Example)
Say: [Beep] “Dial”
Prompt: “Number, please”
Say: [Beep] “XXXXXXXXXXX (Ex. “555-1234”) (Telephone number)”

Bluetooth Hands-Free Activation Method

1. Program the mobile telephone (Pairing) Refer to Bluetooth Hands-Free preparation on page 6-64.
2. Press the voice recognition/hands-free switch with a short press.

The hands-free system is activated. Functions of the hands-free telephone, such as making and receiving calls, can be used after the activation. (For details on the telephone functions, refer to “Basic Bluetooth Hands-Free Operation” or “Convenient Use of the Hands-Free System”.)

Basic Bluetooth Hands-Free Operation

▼Bluetooth Hands-Free preparation

Language setting

The available languages are English, Spanish, and Canadian French. If the language setting is changed, all of the voice guidance and voice input commands are done in the selected language.

NOTE

- *If the language setting is changed, phone registration is maintained.*
  Phonebook records are not cleared, but each language has a separate phonebook. Therefore, entries created in one language will need to be re-entered in the phonebook of the new language.
- *Do these steps before you start driving. These less used functions are too distracting to undertake while driving until you are fully familiar with the system.*

Method 1

1. Press the voice recognition/hands-free switch with a short press.
2. **Say:** [Beep] “Setup”
3. **Prompt:** “Select one of the following: Pairing options, confirmation prompts, select phone, language, or passcode, or say “cancel” to return to the main menu.”
4. **Say:** [Beep] “Language”
5. **Prompt:** “Select a language: English, French, or Spanish.”
6. **Say:** [Beep] “French” (Speak the desired language: “English”, “French” or “Spanish”)

NOTE
Other language settings can also be made while in the current setting by saying the name of the language in the native pronunciation.

7. **Prompt:** “French (Desired language) selected. Is this correct?”
8. **Say:** [Beep] “Yes”
9. **Prompt:** “French (Desired language) selected, returning to main menu” (Spoken in the newly selected language).

Method 2

1. Press the voice recognition/hands-free switch with a short press.
2. **Say:** [Beep] “French” (Say the desired language: “English”, “French”, or “Spanish”.)

NOTE
Other language settings can also be made while in the current setting by saying the name of the language in the native pronunciation.

3. **Prompt:** “Would you like to change the language to French (Desired language)?”
4. **Say:** [Beep] “Yes”
5. **Prompt:** “Please wait. Switching to French phone book. French selected, returning to main menu” (Spoken in the newly selected language).

Mobile telephone programming (Pairing)

To use Bluetooth Hands-Free, a mobile phone equipped with Bluetooth has to be programmed to the hands-free unit using the following procedure.

Up to seven Bluetooth equipped mobile telephones can be programmed to the vehicle.

NOTE
- *A mobile telephone can be programmed only when the vehicle is parked. If the vehicle starts to move, the pairing procedure will end. Programming is dangerous while driving - pair up your device before you start driving. Park the car in a safe place before programming.*
- *Since the communication range of a Bluetooth equipped mobile telephone is about 10 meters (32 ft), if a mobile telephone is placed within a 10-meter (32 ft) radius of the vehicle, it may be detected/ programmed unintentionally while another telephone is being programmed.*

1. Activate the Bluetooth application of the mobile telephone.

NOTE
For the operation of the mobile telephone, refer to its instruction manual.

2. Press the voice recognition/hands-free switch with a short press.
3. **Say:** [Beep] “Setup”
4. **Prompt:** “Select one of the following: Pairing options, confirmation prompts, select phone, language, or passcode, or say “cancel” to return to the main menu.”
5. **Say:** [Beep] “Pairing options”
6. **Prompt:** “Do you want to pair a phone, delete a phone, or list paired phones?”
7. **Say:** [Beep] “Pair a phone”
8. **Prompt:** “Please say a 4-digit pairing code.”

9. **Say:** [Beep] “XXXX” (Speak an arbitrary 4-digit pairing code. This can be any combination of 4 numbers.)

NOTE
- *Some devices accept only a particular pairing code (Usually, “0000” or “1234”). If pairing cannot be completed, refer to the owner's manual of your mobile device, and try those numbers if necessary.*
- *Record the code as it will be used to program your phone in Step 16.*

10. **Prompt:** “Pairing code XXXX (4-digit number). Is this correct?”
11. **Say:** [Beep] “Yes” or “No”
12. If “Yes”, go to Step 13.
    If “No”, the procedure returns to Step 8.
13. **Prompt:** “Start pairing procedure on phone. See phone's manual for instructions.”
14. Using the mobile telephone, perform a search for the Bluetooth device (Peripheral device).

NOTE
For the operation of the mobile telephone, refer to its instruction manual.

15. Select “Mazda” from the device list searched by the mobile phone.
16. Input the 4-digit pairing code set in Step 9 to the mobile telephone.
17. **Prompt:** “Please say the name of the phone after the beep.”
18. **Say:** [Beep] “XXXX - - -” (Speak a “phone tag”, an arbitrary name for the phone.)
    Example: “Stan's phone.”

NOTE
Speak a programmed “phone tag” within 10 seconds.
If more than two mobile telephones are to be programmed, they cannot be programmed with the same or similar “phone tag”.

19. **Prompt:** “Adding XXXXXX - - - (Ex. “Stan's phone”) (Phone tag). Is this correct?”
20. **Say:** [Beep] “Yes”
21. **Prompt:** “Assign a priority for this phone between 1 and 7, where 1 is the phone used most often.”
22. **Say:** [Beep] “1” (Speak a number of the desired priority from 1 to 7.)

NOTE
- *Normally, “1” is to be input (Highest priority).*
- *If more than two mobile telephones are registered, input the priority order from 1 to 7.*

23. **Prompt:** “XXXXXX - - - (Ex. “Stan's phone”) (Phone tag) set to priority X (Priority number). Is this correct?”
24. **Say:** [Beep] “Yes”
25. **Prompt:** “Pairing complete”

After a mobile telephone is registered, the system automatically identifies the phone. By pressing the voice recognition/hands-free switch again, or by pressing the voice recognition/hands-free switch first after switching the ignition from OFF to ACC, the system reads out a voice guidance, “XXXXXX - - - (Ex. “Stan's phone”) (Phone tag) is connected”. If two or more telephones are registered, the one with the highest priority is selected.

NOTE
Depending on the device, the registration status may be lost after a certain period of time. If this occurs, repeat the entire process from Step 1.

▼Making a call using a telephone number

NOTE
Practice this while parked until you are confident you can do it while driving in a non-taxing road situation. If you are not completely comfortable, make all calls from a safe parking position, and move out only when fully under control and you can devote your eyes and mind to driving.

1. Press the voice recognition/hands-free switch with a short press.
2. **Say:** [Beep] “Dial”
3. **Prompt:** “Number, please”
4. **Say:** [Beep] “XXXXXXXXXXX (Ex. “555-1234”) (Telephone number)”
5. **Prompt:** “Dialing XXXXXXXXXXX (Ex. “555-1234”) (Telephone number) is this correct?”
6. **Say:** [Beep] “Yes” or “No”.
7. When “Yes” is spoken, the call is made.
   When “No” is spoken, the procedure returns to Step 3.

NOTE
The “Dial” command and a telephone number can be combined.
Ex. In Step 2, say, “Dial 123-4567”, then, Steps 3 and 4 can be skipped.

▼Receiving an incoming call

1. **Prompt:** “Incoming call, press the phone button to answer”.
2. To accept the call, press the voice recognition/hands-free switch with a short press.
   To reject the call, press the voice recognition/hands-free switch with a long press.

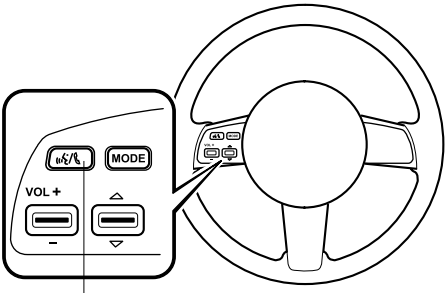

▼Hanging up a call

Press the voice recognition/hands-free switch during the call with a long press. A beep sound will confirm that call is ended.

▼Volume adjustment

The power/volume dial of the audio unit is used to adjust the volume. Turn the dial to the right to increase volume, to the left to decrease it.

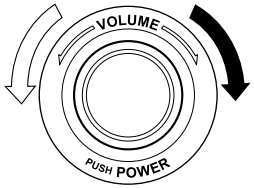

NOTE

- *The volume can also be adjusted using the volume button on the steering wheel.*
- *The music volume of the audio unit cannot be adjusted while Bluetooth Hands-Free is being used.*

▼Help function use

The help function informs the user of all the available voice commands under the current conditions.

1. Press the voice recognition/hands-free switch with a short press.
2. **Say:** [Beep] “Help”
3. Follow the prompts to receive the appropriate voice guidance instructions.

Convenient Use of the Hands-Free System

▼Phone book usage

Phone book registration

Phone numbers can be registered to the Bluetooth Hands-Free phone book.

NOTE

Do this function only when parked. It is too distracting to attempt while driving and you may make too many errors to be effective.

1. Press the voice recognition/hands-free switch with a short press.
2. **Say:** [Beep] “Phone book”
3. **Prompt:** “Select one of the following: new entry, edit, list names, delete or erase all..., or say “cancel” to return to main menu.”
4. **Say:** [Beep] “New entry”
5. **Prompt:** “Name please.”
6. **Say:** [Beep] “XXXXX... (Ex. “Mary's phone”)” (Say a voice tag for the name registered.)
7. **Prompt:** “Adding XXXXX... (Ex. “Mary's phone”) (Registered voice tag). Is this correct?”
8. **Say:** [Beep] “Yes”
9. **Prompt:** “Home, Work, Mobile, or Pager?”
10. **Say:** [Beep] “Mobile” (Say “Home”, “Work”, “Mobile”, or “Pager”, for the desired location to be registered.)
11. **Prompt:** “Mobile (Location to be registered). Is this correct?”
12. **Say:** [Beep] “Yes”

13. **Prompt:** “Number, please.”
14. **Say:** [Beep] “XXXXXXXXXXX (Ex. “555-1234”)” (Say the phone number to be registered.)
15. **Prompt:** “XXXXXXXXXXX (Ex. “555-1234”) (Phone number registration). Is this correct? ”
16. **Say:** [Beep] “Yes”
17. **Prompt:** “Number saved. Would you like to add another number for this entry?”
18. **Say:** [Beep] “Yes” or “No”.
19. If “Yes”, an additional phone number registration can be made for the same entry.
    If “No”, the procedure proceeds to Step 20.
20. **Prompt:** “Returning to main menu.”

Making calls using the phone book

Telephone calls can be made by saying the name of a person (voice tag) whose phone number has been registered in Bluetooth Hands-Free in advance.
For the phone book setting method, refer to (page 6-70).

1. Press the voice recognition/hands-free switch with a short press.
2. **Say:** [Beep] “Call”
3. **Prompt:** “Name please.”
4. **Say:** [Beep] “XXXXX... (Ex. “John's phone”)” (Say a voice tag registered in the phone book.)
5. **Prompt:** “Calling XXXXX... (Ex. “John's phone”) XXXX (Ex. “at home”). Is this correct?” (Voice tag and phone number location registered in phone book).
6. **Say:** [Beep] “Yes”
7. **Prompt:** “Dialing”

NOTE
The “Call” command and the voice tag can be combined.
Ex. In Step 2, say, “Call John's phone”, then, Steps 3 and 4 can be skipped.

▼Redialing function

Redialing the number of the person previously dialed using the phone is possible.

1. Press the voice recognition/hands-free switch with a short press.
2. **Say:** [Beep] “Redial”
3. **Prompt:** “Dialing”

▼Emergency calls

A call can be made to the emergency phone number (911) using the voice input command.

1. Press the voice recognition/hands-free switch with a short press.
2. **Say:** [Beep] “Emergency”
3. **Prompt:** “Calling “911”, is this correct?”
4. **Say:** [Beep] “Yes”
5. **Prompt:** “Dialing”

▼Refusing an incoming call

For incoming call refusal, refer to “Receiving an incoming call” (page 6-67).

▼Mute

The microphone can be muted during a call.

1. Press the voice recognition/hands-free switch with a short press.
2. **Say:** [Beep] “Mute”
3. **Prompt:** “Microphone muted”

Canceling mute

1. Press the voice recognition/hands-free switch with a short press.
2. **Say:** [Beep] “Mute off”
3. **Prompt:** “Microphone unmuted”

▼Transferring a call

Transferring a call from Hands-Free to a mobile phone

Communication between the hands-free unit and a mobile phone is canceled, and the line can be switched to a standard call using a mobile phone.

1. Press the voice recognition/hands-free switch with a short press.
2. **Say:** [Beep] “Transfer call”
3. **Prompt:** “Transferred call to phone”

Transferring a call from a mobile phone to Hands-Free

Communication between mobile phones can be switched to the Bluetooth Hands-Free system.

1. Press the voice recognition/hands-free switch with a short press.
2. **Say:** [Beep] “Transfer call”
3. **Prompt:** “Transferred call to Hands Free system”

Call waiting

A call can be interrupted to receive an incoming call from a third party.

Call interrupt

A call can be switched to a new incoming call.
Press the voice recognition/hands-free switch with a short press.

NOTE

- *To refuse an incoming call, press the voice recognition/hands-free switch with a long press.*
- *After receiving a new incoming call, the previous call is placed on hold.*

Switching calls

Switching back to the previous call can also be done.
Press the voice recognition/hands-free switch with a short press.

Ending the current call

Press the voice recognition/hands-free switch during the call with a long press.

▼Voice guidance interrupt operation

Voice guidance can be stopped by pressing the voice recognition/hands-free switch with a short press while it is being heard. A new voice input command can then be spoken by the user.

· Press the voice recognition/hands-free switch with a short press.

▼Phone book settings

Editing phone book

The data registered to the Bluetooth Hands-Free phone book can be edited.

NOTE
Do this function only when parked. It is too distracting to attempt while driving and you may make too many errors to be effective.

1. Press the voice recognition/hands-free switch with a short press.
2. **Say:** [Beep] “Phone book”
3. **Prompt:** “Select one of the following: new entry, edit, list names, delete or erase all..., or say “cancel” to return to main menu.”
4. **Say:** [Beep] “Edit”
5. **Prompt:** “Please say the name of the entry you would like to edit, or say “List names”..., or say “cancel” to return to main menu.”
6. **Say:** [Beep] “XXXXX... (Ex. “Mary's phone”)” (Say the voice tag for the registered name to be edited in the phone book.)
7. **Prompt:** “Home, Work, Mobile, or Pager?”
8. **Say:** [Beep] “Home” (Say the registered location to be edited: “Home”, “Work”, “Mobile”, or “Pager”).
9. **Prompt:** “XXXXX... (Ex. “Mary's phone”) (Registered voice tag) XXXX (Ex. “Home”) (Registered location). Is this correct?”
10. **Say:** [Beep] “Yes”
11. **Prompt:** “The current number is XXXXXXXXXXX (Ex. “555-1234”) (Currently registered number). New number, please.”

NOTE
If there was no previous phone number registered to a location (Ex. “Work”), the prompt will only read out “Number, please”.

12. **Say:** [Beep] “XXXXXXXXXXX (Ex. “666-1234”)” (Say the new phone number to be registered.)
13. **Prompt:** “XXXXXXXXXXX (Ex. “666-1234”) (The new phone number to be registered). Is this correct?”
14. **Say:** [Beep] “Yes”
15. **Prompt:** “Number changed. Would you like to call this number, edit another entry..., or say “cancel” to return to main menu.”

<u>Phone book data deletion</u>

Erasing individual phone book data

Individual data registered to the Bluetooth Hands-Free phone book can be cleared.

NOTE
Do this function only when parked. It is too distracting to attempt while driving and you may make too many errors to be effective.

1. Press the voice recognition/hands-free switch with a short press.
2. **Say:** [Beep] “Phone book”
3. **Prompt:** “Select one of the following: new entry, edit, list names, delete or erase all..., or say “cancel” to return to main menu.”
4. **Say:** [Beep] “Delete”
5. **Prompt:** “Please say the name of the entry you would like to delete, or say “List names”..., or say “cancel” to return to main menu.”

6. **Say:** [Beep] “XXXXX... (Ex. “John's phone”)” (Say the registered voice tag to be deleted from the phone book.)
7. **Prompt:** “Deleting XXXXX... (Ex. “John's phone”) (Registered voice tag) Home (Registered location). Is this correct?”
8. **Say:** [Beep] “Yes”
9. **Prompt:** “XXXXX... (Ex. “John's phone”) (Registered voice tag) Home (Registered location) deleted, returning to main menu.”

Complete deletion of the phone book data

All data registered to the Bluetooth Hands-Free phone book can be erased.

NOTE
Do this function only when parked. It is too distracting to attempt while driving and you may make too many errors to be effective.

1. Press the voice recognition/hands-free switch with a short press.
2. **Say:** [Beep] “Phone book”
3. **Prompt:** “Select one of the following: new entry, edit, list names, delete or erase all..., or say “cancel” to return to main menu.”
4. **Say:** [Beep] “Erase all”
5. **Prompt:** “Are you sure you want to erase everything from your Hands Free system phone book?”
6. **Say:** [Beep] “Yes”
7. **Prompt:** “You are about to delete everything from your Hands Free system phone book. Do you want to continue?”
8. **Say:** [Beep] “Yes”
9. **Prompt:** “Please wait, erasing the Hands Free system phone book.”
10. **Prompt:** “Hands-Free system phone book erased, returning to main menu.”

Read-out of names registered to the Bluetooth Hands-Free phone book

The Bluetooth Hands-Free system can read out the list of names registered to its phone book.

1. Press the voice recognition/hands-free switch with a short press.
2. **Say:** [Beep] “Phone book”
3. **Prompt:** “Select one of the following: new entry, edit, list names, delete or erase all..., or say “cancel” to return to main menu.”
4. **Say:** [Beep] “List names”
5. **Prompt:** “XXXXX..., XXXXX..., XXXXX... (Ex. “John's phone”, Mary's phone, Bill's phone)” (Voice guidance reads out the voice tags registered to the phone book.)

Press the voice recognition/hands-free switch during the read-out at the desired name, and then say one of the following voice commands to execute it.

- “Continue”: Continues the voice guidance.
- “Call”: Calls the registered phone number.
- “Edit”: Edits the registered phone number.
- “Delete”: Deletes the registered phone number.
- “Previous”: Returns to the previous phone number.
- “Cancel”: Returns to main menu.

6. **Prompt:** “End of list, would you like to start from the beginning?”
7. **Say:** [Beep] “No”
8. **Prompt:** “Returning to main menu.”

Hands-Free Telephone Setting

▼Mobile phone

Mobile phone registration

For the registration of a Bluetooth equipped mobile telephone to Bluetooth Hands-Free, refer to “Bluetooth Hands-Free preparation” (page 6-64).

Registered mobile phone read-out

Bluetooth Hands-Free can read-out the mobile phones registered to its system.

NOTE
Do this function only when parked. It is too distracting to attempt while driving and you may make too many errors to be effective.

1. Press the voice recognition/hands-free switch with a short press.
2. **Say:** [Beep] “Setup”
3. **Prompt:** “Select one of the following: pairing options, confirmation prompts, select phone, language, or passcode..., or say “cancel” to return to main menu.”
4. **Say:** [Beep] “Pairing options”
5. **Prompt:** “Do you want to pair a phone, delete a phone, or list paired phones?”
6. **Say:** [Beep] “List phones”
7. **Prompt:** “XXXXX..., XXXXX..., XXXXX... (Ex. Phone A, phone B, phone C)” (The voice guidance reads out the phone tags registered to the hands-free system.)

Press the voice recognition/hands-free switch during the read-out at the desired phone, and then say one of the following voice commands to execute it.

- "Select": Programmed the mobile phone when the voice recognition/ hands-free switch was pressed.
- "Continue": Continues the voice guidance.
- "Delete": Deletes the registered mobile phone.
- "Previous": Returns to the previous mobile phone.

8. **Prompt:** "End of list, would you like to start from the beginning?"
9. **Say:** [Beep] "No"
10. **Prompt:** "Returning to main menu."

Mobile phone selection

This function is for switching to a different mobile phone which has been registered beforehand. The selected mobile phone will remain in effect until the ignition is switched off.

1. Press the voice recognition/hands-free switch with a short press.
2. **Say:** [Beep] "Setup"
3. **Prompt:** "Select one of the following: pairing options, confirmation prompts, select phone, language, or passcode..., or say "cancel" to return to main menu."
4. **Say:** [Beep] "Select phone"
5. **Prompt:** "Please say 1 (priority 1) for XXXXX... (Ex. phone A), 2 (priority 2) for XXXXX... (Ex. phone B...)"
6. **Say:** [Beep] "2" (Say the priority number for the mobile phone to be used as first priority.)
7. **Prompt:** "XXXXX... (Ex. phone B...) (Registered phone tag) selected, is this correct?"
8. **Say:** [Beep] "Yes"
9. **Prompt:** "XXXXX... (Ex. phone B...) (Phone tag) will temporarily override phone priorities, returning to main menu."

Registered mobile phone deletion

Registered mobile phones can be deleted individually or collectively.

NOTE
Do this function only when parked. It is too distracting to attempt while driving and you may make too many errors to be effective.

1. Press the voice recognition/hands-free switch with a short press.
2. **Say:** [Beep] "Setup"
3. **Prompt:** "Select one of the following: pairing options, confirmation prompts, select phone, language, or passcode..., or say "cancel" to return to main menu."
4. **Say:** [Beep] "Pairing options"
5. **Prompt:** "Do you want to pair a phone, delete a phone, or list paired phones?"

NOTE
A registered mobile phone can be deleted using the registration list.

6. **Say:** [Beep] "Delete phone"
7. **Prompt:** "Please say 1 (priority 1) for XXXXX... (Ex. phone A), 2 (priority 2) for XXXXX... (Ex. phone B...)" (The voice guidance reads out each phone in the order of priority and the phone tag).

8. **Say:** [Beep] “2” (Say the order of priority of the mobile phone to be deleted.)

NOTE
Say “All” to delete all mobile phones.

9. **Prompt:** “Removing XXXXX... (Ex. phone B...) (Registered phone tag). Is this correct?”
10. **Say:** [Beep] “Yes”
11. **Prompt:** “Deleted”

▼Security setting

If a passcode is set, the system cannot be activated unless the passcode is input.

NOTE
Do this function only when parked. It is too distracting to attempt while driving and you may make too many errors to be effective.

Passcode setting

1. Press the voice recognition/hands-free switch with a short press.
2. **Say:** [Beep] “Setup”
3. **Prompt:**“Select one of the following: pairing options, confirmation prompts, select phone, language, or passcode..., or say “cancel” to return to main menu.”
4. **Say:** [Beep] “Passcode”
5. **Prompt:** “Passcode is disabled. Would you like to enable it?”
6. **Say:** [Beep] “Yes”
7. **Prompt:**“Please say a 4-digit passcode. Remember this passcode. It will be required to use this system.”
8. **Say:** [Beep] “XXXX” (Say a desired 4-digit passcode, “PCode”.)
9. **Prompt:**“Passcode XXXX (Passcode, PCode). Is this correct?”
10. **Say:** [Beep] “Yes”
11. **Prompt:**“Passcode is enabled, returning to main menu.”

Using Bluetooth Hands-Free with a passcode

1. Press the voice recognition/hands-free switch with a short press.
2. **Prompt:**“Hands-Free system is locked. State the passcode to continue.”
3. **Say:** [Beep] “XXXX” (Say the set passcode “PCode”.)
4. If the correct passcode is input, voice guidance “XXXXXX... (Ex. “Mary's phone”) (Phone tag) is connected” is announced.
   If the passcode is incorrect, voice guidance “XXXX (4-digit passcode, Pcode) incorrect passcode, please try again” is announced.

Canceling the passcode

NOTE
Do this function only when parked. It is too distracting to attempt while driving and you may make too many errors to be effective.

1. Press the voice recognition/hands-free switch with a short press.
2. **Say:** [Beep] “Setup”
3. **Prompt:** “Select one of the following: pairing options, confirmation prompts, select phone, language, or passcode..., or say “cancel” to return to main menu.”

4. **Say:** [Beep] “Passcode”
5. **Prompt:**“Passcode is enabled. Would you like to disable it?”
6. **Say:** [Beep] “Yes”
7. **Prompt:**“Passcode is disabled, returning to main menu.”

Confirmation Prompts

The confirmation prompt confirms the command content to the user before advancing to the operation requested by the user. When this function is turned on, the system reads out the voice input command previously received and confirms whether the command is correct before advancing to the command execution.
When the confirmation prompt function is turned on:
(Ex. “Calling John's phone. Is this correct?”)
When the confirmation prompt function is turned off:
(Ex. “Calling John's phone.”)

NOTE
If the confirmation prompt function is turned off when making an emergency call, the system reads out and confirms the command before executing it.

1. Press the voice recognition/hands-free switch with a short press.
2. **Say:** [Beep] “Setup”
3. **Prompt:**“Select one of the following: pairing options, confirmation prompts, select phone, language, or passcode..., or say “cancel” to return to main menu.”
4. **Say:** [Beep] “Confirmation prompts”
5. **Prompt:**“Confirmation prompts are on/off. Would you like to turn confirmation prompts off/on?”
6. **Say:** [Beep] “Yes”
7. **Prompt:**“Confirmation prompts are off/on, returning to main menu.”

▼Voice recognition learning function (Speaker enrollment)

The voice recognition learning function enables voice recognition appropriate to the characteristics of the user's voice.
If the recognition of the voice input commands to the system is not adequate, this function can largely improve the system's voice recognition of the user. If your voice can be recognized sufficiently without using this function, you may not realize the added benefit of the function.
To register your voice, the voice input command list must be read out. Read out the list when the vehicle is parked.
Perform the registration in as quiet a place as possible (page 6-63).
The registration must be performed completely. The required time is a few minutes. The user needs to be seated in the driver's seat with the voice input command list for voice recognition learning open to the page indicated below.

1. Press the voice recognition/hands-free switch with a short press.
2. **Say:** [Beep] “Voice training”
3. **Prompt:** “This operation must be performed in a quiet environment while the vehicle is stopped. See the owner's manual for the list of required training phrases. Press and release the phone button when you are ready to begin. Press and hold the phone button to cancel at any time.”

4. Press the voice recognition/hands-free switch with a short press.
5. The voice guidance reads out the voice input command number (refer to the voice input command list for voice recognition learning). (Ex. “Please read phrase 1”)
6. **Say:** [Beep] “0123456789” (Say the voice input command for voice recognition learning (1 to 8) according to the voice guidance.)
7. **Prompt:** “Speaker enrollment is complete, returning to main menu.”

Voice input command list for voice recognition learning

When reading out, the following points must be observed:

- Read out the numbers one at a time correctly and naturally.

(For example, “1234” must be read out “one, two, three, four”, not “twelve, thirty four”.)

- Do not read out parentheses. “ (” and hyphens “-” are used for separating numbers in a phone number.

Ex.
“ (888) 555-1212” must be spoken “Eight, eight, eight, five, five, five, one, two, one, two.”

Phrase	Command
1	0123456789
2	(888) 555-1212
3	Call
4	Dial
5	Setup
6	Cancel
7	Continue
8	Help

NOTE
After user voice registration is completed, voice guidance “Speaker enrollment is complete, returning to main menu” is announced.

▼DTMF (dual tone multi-frequency signal) transmission

This function is used when transmitting DTMF via the user's voice. The receiver of a DTMF transmission is generally a home telephone answering machine or a company's automated guidance call center (When you send tone signals back according to the voice guidance recording).

1. Press the voice recognition/hands-free switch with a short press.
2. **Say:** [Beep] “XXXX... send” (Say DTMF code)
3. **Prompt:** “Sending XXXX... (DTMF code)”

When Bluetooth Hands-Free cannot be used

Bluetooth Hands-Free cannot be used under the following conditions:

- The mobile telephone is outside of the communication area.
- The mobile telephone has a malfunction.
- The mobile telephone is not connected to the hands-free unit equipped on the vehicle.
- The mobile telephone battery is weak.
- The mobile telephone is turned off.
- The mobile telephone is placed where radio reception is difficult.

Safety Certification

FCC ID: CB2MBLUEC07 IC:279B-MBLUEC07
This device complies with Part 15 of the FCC Rules and with RSS-210 of Industry Canada. Operation is subject to the following two conditions:

(1) This device may not cause harmful interference, and
(2) This device must accept any interference received, including interference that may cause undesired operation.

⚠ WARNING

Changes or modifications not expressively approved by the party responsible for compliance could void the user's authority to operate the equipment.

The term “IC: ” before the radio certification number only signifies that Industry Canada technical specifications were met.
The antenna used for this transmitter must not be co-located or operating in conjunction with any other antenna or transmitter. End-users and installers must be provided with installation instructions and transmitter operating conditions for satisfying RF exposure compliance.

Mazda Bluetooth Hands-Free Customer Service

For toll-free Bluetooth Hands-Free customer service call 800-430-0153 or go to www.MazdaUSA.com/bluetooth for assistance.

Sunvisors

When you need a sunvisor, lower it for use in front.

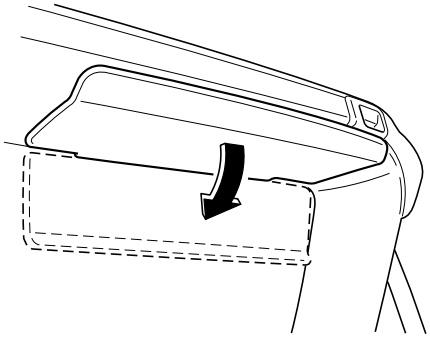

▼Vanity Mirrors

To use the vanity mirror, lower the sunvisor.

Interior Lights

▼Overhead Light

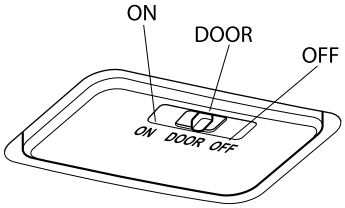

Switch Position	Overhead Light
OFF	Light off
DOOR	Light is on when any door is open
ON	Light on

▼Trunk Light

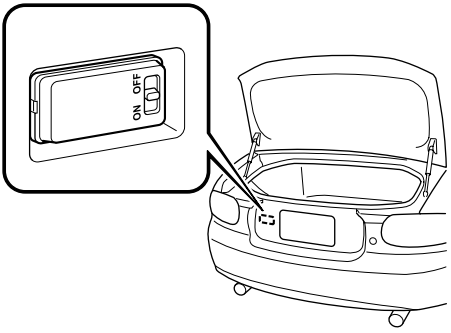

Switch Position	Trunk Light
OFF	Light off
ON	Light on when the trunk is open

Cup Holder

WARNING

Never use a cup holder to hold hot liquids while the vehicle is moving:

Using a cup holder to hold hot liquids while the vehicle is moving is dangerous. If the contents spill, you could be scalded.

Do not put anything other than cups or drink cans in cup holders:

Putting objects other than cups or drink cans in a cup holder is dangerous.
During sudden braking or maneuvering, occupants could be hit and injured, or objects could be thrown around the vehicle, causing interference with the driver and the possibility of an accident. Only use a cup holder for cups or drink cans.

CAUTION

To reduce the possibility of injury in an accident or a sudden stop, keep cup holders closed when not in use.

To open the cup holder lid, press the switch rearward and slide the lid open.

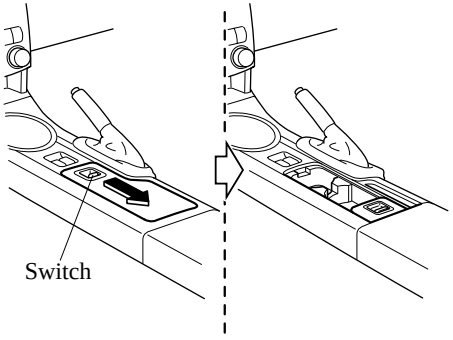

Multi-Pocket

Multi-pockets are on the inside of the doors.

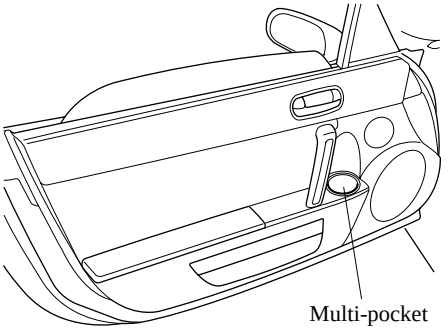

CAUTION

Do not use the multi-pockets for containers without caps. The contents may spill when the door is opened or closed.

Storage Compartments

⚠ WARNING

Keep storage boxes closed when driving:

Driving with the storage boxes open is dangerous. To reduce the possibility of injury in an accident or a sudden stop, keep the storage boxes closed when driving.

⚠ CAUTION

Do not leave lighters or eyeglasses in the storage boxes while parked under the sun. A lighter could explode or the plastic material in eyeglasses could deform and crack from high temperature.

▼Glove Box

To open the glove box, pull the latch toward you.
Insert the key (auxiliary key*) and turn it clockwise to lock, counterclockwise to unlock.
* Advanced key equipped vehicle

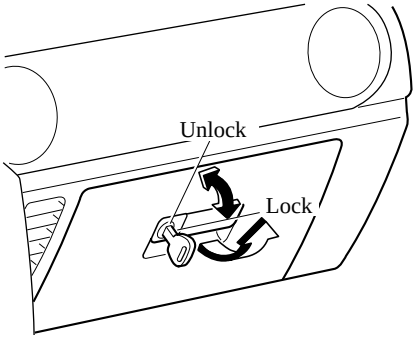

▼Seat Side Box

To open, pull the release catch.
Insert the key and turn it clockwise to lock, counterclockwise to unlock.

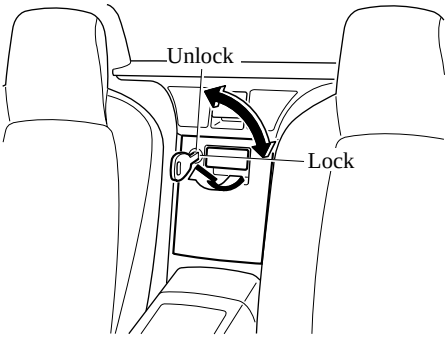

▼Back Trim Storage Box*

Small items can be stored in the back trim storage box.

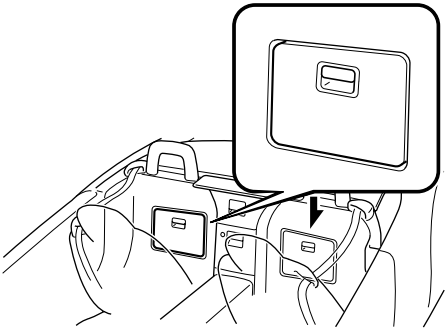

To use the back trim storage box

1. To use the desired storage box, slide the seat in front of it all the way forward.
   Refer to Seat Slide on page 2-2.
2. Fold the seatback forward all the way down.
   Refer to Seat Recline on page 2-3.

*Some models.

3. If your vehicle has a lid, pull the latch to open.

When finished, return the seat to its original position and secure it. After returning the seat to its original position, make sure the seat is secured by attempting to lightly move it forward and backward.

⚠ CAUTION

Do not store excessive weight in the back trim storage box as it could be damaged.

▼Mesh Pocket

Maps or pamphlets can be placed in the mesh pocket.

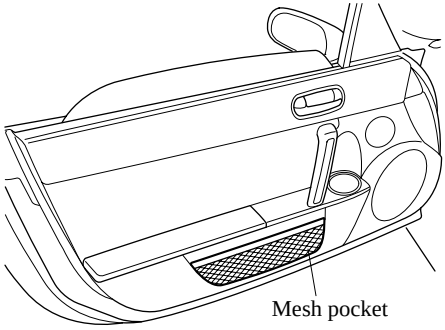

⚠ CAUTION

Do not place thick objects in the mesh pocket as they could damage the pocket.

Accessory Socket

Switch the ignition to ACC or ON.
Only use genuine Mazda accessories or the equivalent requiring no greater than 120 W (DC 12 V, 10 A).

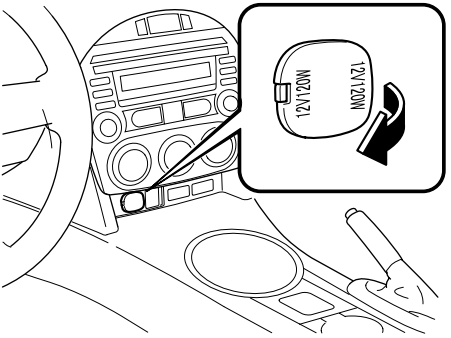

⚠ CAUTION

To prevent accessory socket damage or electrical failure, pay attention to the following:

- *Do not use accessories that require more than 120 W (DC 12 V, 10 A).*
- *Do not use accessories that are not genuine Mazda accessories or the equivalent.*
- *Close the cover when the accessory socket is not in use to prevent foreign objects and liquids from getting into the accessory socket.*
- *Correctly insert the plug into the accessory socket.*

NOTE

To prevent discharging of the battery, do not use the socket for long periods with the engine off or idling.

Windblocker

This windblocker reduces rear wind blast into the cabin when driving with the convertible top down.
To use the windblocker, lift it upright.

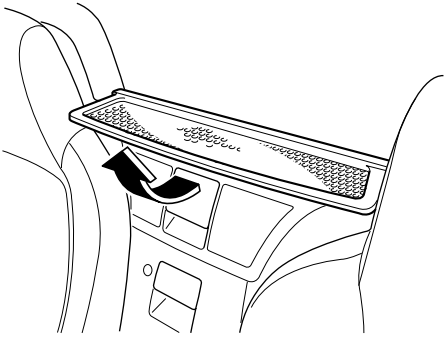

7 In Case of an Emergency

Helpful information on what to do in an emergency.

Parking in an Emergency 7-2
Parking in an Emergency 7-2

Flat Tire 7-3
Flat Tire* 7-3
Tool Storage 7-5
Instant Mobility System (IMS) Emergency Flat Tire Repair Kit* 7-7
Changing a Tire 7-13

Overheating 7-18
Overheating 7-18

Emergency Starting 7-20
Starting a Flooded Engine 7-20
Jump-Starting 7-21
Push-Starting 7-24

Emergency Towing 7-25
Towing Description 7-25
Tiedown Hooks 7-26
Recreational Towing 7-28

*Some models.

Parking in an Emergency

The hazard warning lights should always be used when you stop on or near a roadway in an emergency.

The hazard warning lights warn other drivers that your vehicle is a traffic hazard and that they must take extreme caution when near it.

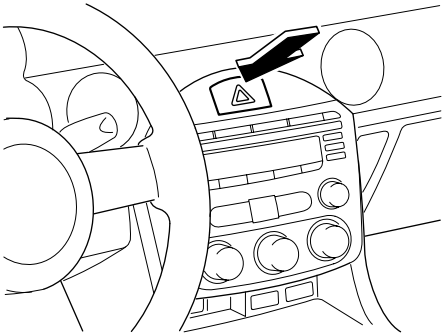

Depress the hazard warning flasher and all the turn signals will flash.

NOTE

- *The turn signals do not work when the hazard warning lights are on.*
- *Check local regulations about the use of hazard warning lights while the vehicle is being towed to verify that it is not in violation of the law.*

Flat Tire*

Either run-flat tires or conventional tires are equipped on your Mazda depending on the specification, therefore the procedure for repairing a flat tire differs depending on the type of tire. Before driving, make sure which type of tire is equipped on your Mazda. If you cannot identify your tire type, consult an Authorized Mazda Dealer.

▼How to identify your tire type

Run-flat tire

A run-flat tire has a “RFT” mark on the side wall.

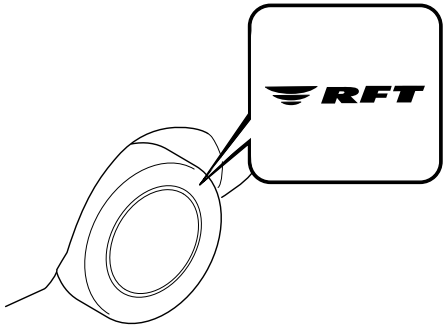

Conventional tire

A conventional tire does not have a “RFT” mark on the side wall.

▼Vehicle with run-flat tires

⚠ WARNING

Have the tires checked or perform the appropriate repair as soon as possible by an Authorized Mazda Dealer:

When the flat tire warning light illuminates or the tire pressure warning beep sound is heard, it is dangerous to drive the vehicle at high speeds, or perform sudden maneuvering or braking. Vehicle drivability could worsen and result in an accident.

When the flat tire warning light illuminates or the tire pressure warning beep sound is heard, decrease vehicle speed immediately and avoid sudden maneuvering and braking.

If a run-flat tire is punctured, the FLAT TIRE warning light illuminates in the instrument cluster, and a beep sound is heard for about 30 seconds.

FLAT TIRE

NOTE

Until the flat tire is changed, the beep sound is heard for about 30 seconds every time the ignition switch is turned to the ON position.

Vehicles with run-flat tires can be driven even with a punctured tire under the following conditions.

*Some models.

Maximum vehicle speed with a punctured run-flat tire: 80 km/h (49 mph)
Maximum driving distance with a punctured run-flat tire: 80 km (49 miles)

CAUTION

The maximum driving distance may be shorter depending on the driving conditions.

If a run-flat tire is punctured, carefully drive the vehicle to the nearest Mazda Dealer and have the tire changed.

NOTE

- *A spare tire or Instant Mobility System (IMS) emergency flat tire repair kit is not equipped on vehicles with run-flat tires as standard.*
- *Replacing a punctured run-flat tire with a new run-flat tire is recommended.*
- *Do not use run-flat tires and conventional tires on the same vehicle.*

▼Vehicle with conventional tires

If the following occurs while driving, it could indicate a flat tire.

- Steering becomes difficult.
- The vehicle begins to vibrate excessively.
- The vehicle pulls in one direction. If a conventional tire is punctured, refer to “Tool Storage” (page 7-5) and “Instant Mobility System (IMS) Emergency Flat Tire Repair Kit” (page 7-7).

Tool Storage

Tools are stored in the locations illustrated in the diagram.

Trunk room

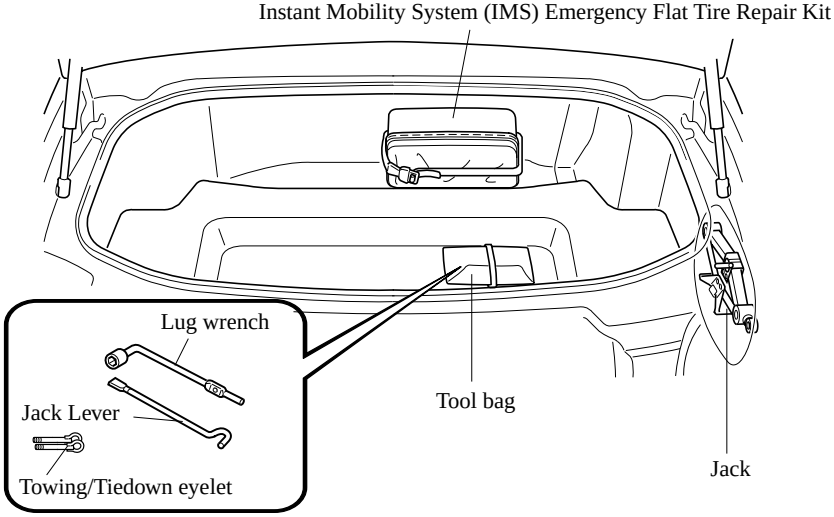

Glove box

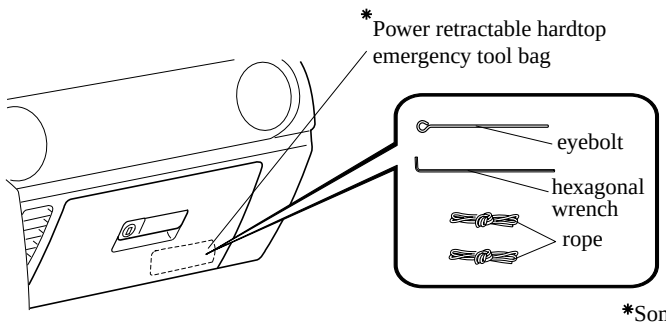

*Some models.

▼Jack

To remove the jack

1. Turn the knob and remove the cover.

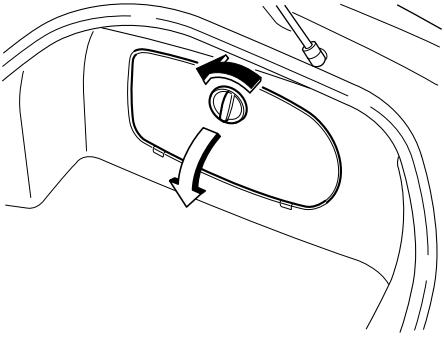

2. Turn the wing bolt and jack screw counterclockwise.

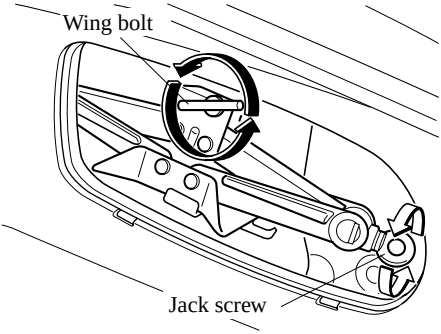

To secure the jack

1. Insert the wing bolt into the jack with the jack screw pointing back and turn the wing bolt clockwise to temporarily tighten it.
2. Turn the jack screw in the direction shown in the figure.

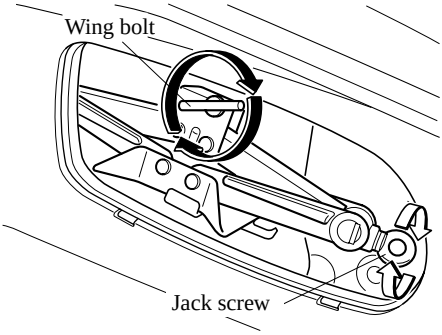

3. Turn the wing bolt completely to secure the jack.

NOTE

If the jack is not completely secured, it could rattle while driving. Make sure the jack screw is sufficiently tightened.

Maintenance

- Always keep the jack clean.
- Make sure the moving parts are kept free from dirt or rust.
- Make sure the screw thread is adequately lubricated.

Instant Mobility System (IMS) Emergency Flat Tire Repair Kit*

The IMS emergency flat tire repair kit included with your Mazda is for a temporary repair of a slightly damaged flat tire resulting from running over nails or similar sharp objects on the road surface.

NOTE

Your vehicle is not equipped with a spare tire. In the event of a flat tire, use the emergency flat tire repair kit to repair the tire temporarily. When doing the repair, refer to the instructions included in the emergency flat tire repair kit. After temporarily repairing a tire with the emergency flat tire repair kit, take your vehicle to an Authorized Mazda Dealer to have the tire replaced.

▼About the IMS Emergency Flat Tire Repair Kit

The IMS emergency flat tire repair kit includes the following items.

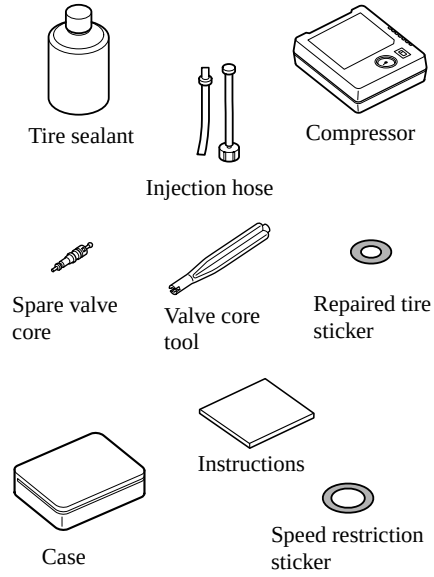

⚠ WARNING

Do not allow children to touch the tire sealant:

Ingestion of tire sealant is dangerous. In the event tire sealant is accidentally swallowed, drink large amounts of water immediately and seek medical assistance.

Do not allow children to touch the tire sealant:

Tire sealant that comes into contact with the eyes and skin is dangerous. If tire sealant enters the eyes or contacts the skin, flush immediately with large amounts of water and seek medical assistance.

*Some models.

NOTE

- *The tire sealant cannot be reused. Purchase new tire sealant at an Authorized Mazda Dealer.*
- *The emergency flat tire repair kit cannot be used in the following cases.*
  Consult an Authorized Mazda Dealer.
  - *The period of effective use for the tire sealant has expired. (The period of effectiveness is indicated on the bottle label.)*
  - *The tear or puncture exceeds about 4 mm (0.16 in).*
  - *The damage has occurred to an area of the tire other than the tread.*
  - *The vehicle has been driven with nearly no air remaining in the tire.*
  - *The tire has come off the wheel rim.*
  - *Damage to the wheel rim has occurred.*
  - *The tire has two or more punctures.*

▼Using the IMS Emergency Flat Tire Repair Kit

1. Park on a level surface off the right-of-way and set the parking brake.
2. Put a vehicle with an automatic transmission in Park (P), a manual transmission in Reverse (R) or 1, and turn off the engine.
3. Turn on the hazard warning flasher.
4. Unload passengers and luggage, and remove the emergency flat tire repair kit.

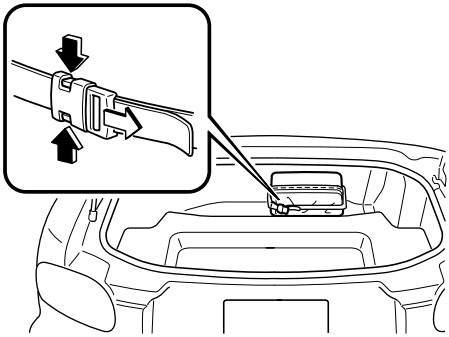

5. Shake the tire sealant well.

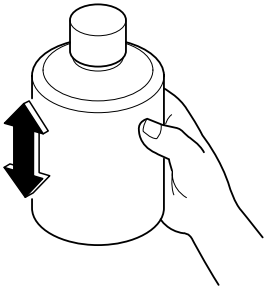

⚠ CAUTION

If the bottle is shaken after the injection hose is screwed on, tire sealant could spray out from the injection hose. Tire sealant contacting clothing or other objects may be impossible to remove. Shake the bottle before screwing on the injection hose.

NOTE
The tire sealant can be used at outside temperatures down to –30°C (–22°F).
In extremely cold temperatures (0°C (32°F) or below), the tire sealant hardens easily and injection of the sealant will be difficult. Warm the sealant inside the vehicle before doing the injection work.

6. Remove the cap from the bottle. Screw on the injection hose with the bottle's inner cap left on to break the inner cap.

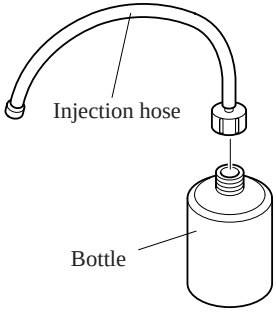

7. Remove the valve cap from the flat tire. Press the back of a valve core tool to the core of the tire valve and bleed all the remaining air.

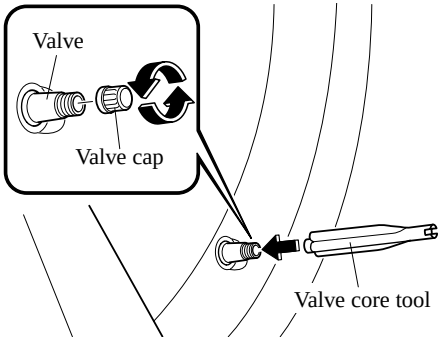

CAUTION

If there is air remaining in the tire when the valve core is removed, the valve core could fly out. Remove the valve core carefully.

8. Turn the valve core counterclockwise with the valve core tool and remove the valve core.

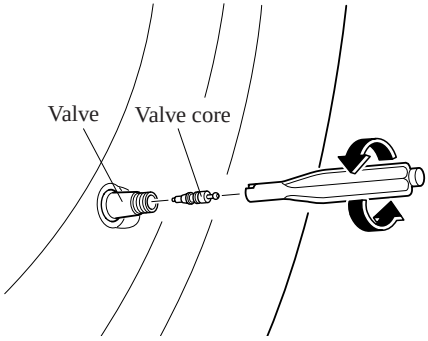

NOTE
Store the valve core in a place where it won't get dirty.

9. Remove the plug from the injection hose and insert the injection hose into the valve.

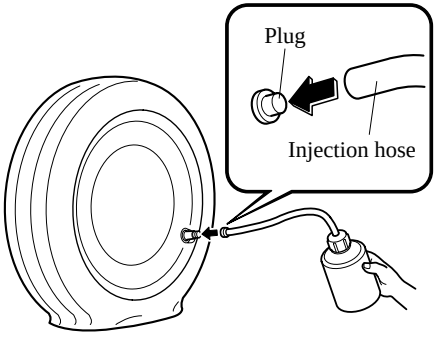

10. Hold the bottom of the bottle upright, squeeze the bottle with your hands, and inject the entire amount of tire sealant into the tire.

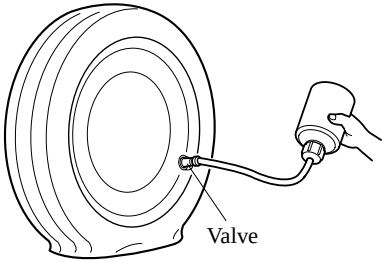

NOTE
The tire sealant cannot be reused. Purchase a new tire sealant kit at an Authorized Mazda Dealer.

11. Pull out the injection hose from the valve. Reinsert the valve core into the valve and turn it clockwise to install it.
12. Attach the sticker that indicates completion of the tire repair on a flat outer surface of the repaired tire.

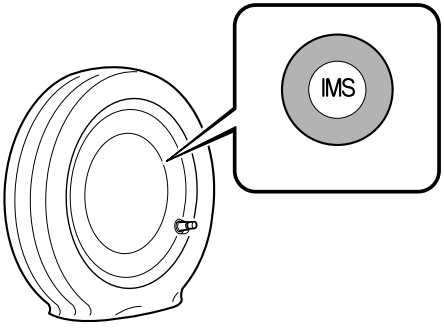

NOTE
Do not throw away the empty tire sealant bottle after use. Return the empty tire sealant bottle to an Authorized Mazda Dealer when replacing the tire. The empty tire sealant bottle will need to be used to extract and dispose of the used sealant from the tire.

13. Attach the vehicle speed restriction sticker in a place where the driver can easily see it.

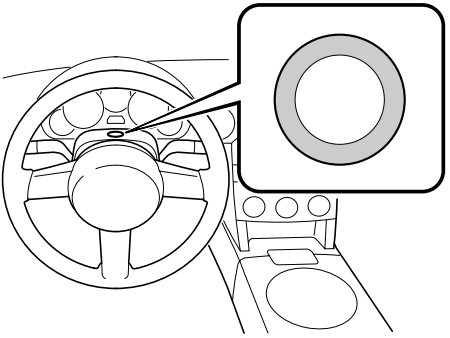

⚠ WARNING

Do not attach the vehicle speed restriction sticker to the instrument panel, as it would obstruct vision of areas such as warning light indicators or the speedometer:

Attaching the vehicle speed restriction sticker to the steering wheel pad is dangerous. The sticker could interfere with air bag inflation and cause serious injury.

14. Install the compressor hose to the tire valve.

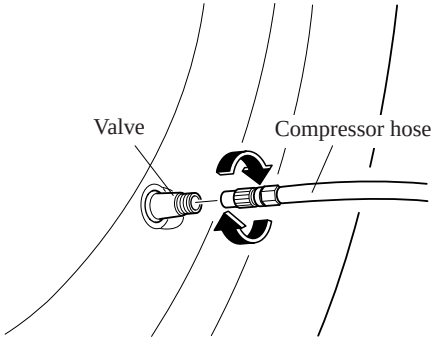

15. Insert the compressor plug into the interior accessory socket and turn the ignition switch to the ACC position (page 6-83).

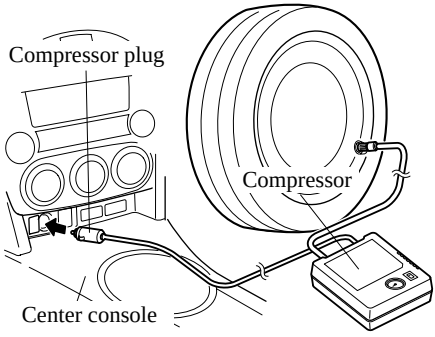

CAUTION

- *Before pulling out the compressor plug from the electrical socket, make sure the compressor power switch is off.*
- *The compressor turns on and off with the push-button switch.*

16. Turn the compressor switch on and inflate the tire carefully to the correct inflation pressure.

WARNING

Never operate the compressor above 300 kPa (3.1 kgf/cm², 3 bar, 43.5 psi):

Operating the compressor above 300 kPa (3.1 kgf/cm², 3 bar, 43.5 psi) is dangerous. When the inflation pressure rises above 300 kPa (3.1 kgf/cm², 3 bar, 43.5 psi), heated air will be exhausted from the back of the compressor and you could be burned.

CAUTION

If the compressor operates slowly or becomes hot, it indicates overheating. Turn the compressor off immediately and leave it turned off for 30 minutes or longer.

NOTE

- *Check the tire inflation pressure label (driver's door frame) for the correct tire inflation pressure.*
- *Do not use the compressor for longer than 10 minutes because using the compressor for long periods could damage it.*
- *If the tire does not inflate, repair of the tire may not be possible. If the tire does not reach the correct inflation pressure within a 10-minute period, it probably has received more extensive damage. When this happens, the emergency flat tire repair kit cannot be used to repair the tire. Contact an Authorized Mazda Dealer.*
- *If the tire has been over-inflated, loosen the screw cap on the compressor and bleed some of the air out.*

17. When the tire has been inflated to the proper inflation pressure, turn the compressor switch off and remove the compressor hose from the tire valve.

18. Install the tire valve cap.
19. Put the emergency flat tire repair kit in the trunk and continue driving.

⚠ CAUTION

- *Drive carefully to an Authorized Mazda Dealer and keep the vehicle speed below 80 km/h (50 mph).*
- *If the vehicle is driven 80 km/h (50 mph) or higher, the vehicle might begin to vibrate.*

20. After driving the vehicle for 10 minutes or 5 km (3 miles), check the tire pressure with the tire pressure gauge equipped with the compressor. If the tire pressure has fallen below the correct tire pressure, inflate the tire to the correct pressure again following the steps from number 15.

⚠ CAUTION

- *If the tire inflation pressure falls below 130 kPa (1.3 kgf/cm² or bar, 18.9 psi), repair cannot be done with the repair kit. Park the vehicle on a level surface off the right-of-way and contact an Authorized Mazda Dealer.*
- *If the tire inflation pressure continues to remain low after repeating steps 14 to 21, park the vehicle on a level surface off the right-of-way and contact an Authorized Mazda Dealer.*

NOTE

When checking the tire inflation pressure with the tire pressure gauge on the compressor unit, make sure the compressor switch is turned off.

21. If the tire inflation pressure remains stable, the tire repair is complete. Drive the vehicle with care to an Authorized Mazda Dealer to have the tire replaced.

⚠ CAUTION

- *A tire that has been temporarily repaired with the tire sealant cannot be reused. Mazda recommends replacing the tire with a new one.*
- *The wheel can be reused after any sealant adhering to it is wiped off and carefully inspected. However, replace the tire valve with a new one.*

▼Inspecting the IMS Emergency Flat Tire Repair Kit

Inspect the emergency tire repair kit at regular intervals.

- Check the tire sealant period of effective use.
- Check the operation of the tire compressor.

NOTE

The tire sealant has a period of effective use. Check the period of effective use indicated on the bottle label and do not use it if it has expired. Have the tire sealant replaced at an Authorized Mazda Dealer before the period of effective use has expired.

Changing a Tire

WARNING

Be sure to follow the directions for changing a tire, and never get under a vehicle that is supported only by a jack:

Changing a tire is dangerous if not done properly. The vehicle can slip off the jack and seriously injure someone.

Never allow anyone inside a vehicle supported by a jack:

Allowing someone to remain in a vehicle supported by a jack is dangerous. The occupant could cause the vehicle to fall resulting in serious injury.

CAUTION

(With Tire Pressure Monitoring System)

The wheels equipped on your Mazda are specially designed for installation of the tire pressure sensors. Do not use non-genuine wheels, otherwise it may not be possible to install the tire pressure sensors.

NOTE

- *Make sure the jack is well lubricated before using it.*

(With Tire Pressure Monitoring System)

- *Be sure to register the tire pressure sensor ID signal code whenever tires or wheels are changed (page 5-35).*

1. Park on a level surface off the right-of-way and firmly set the parking brake.
2. Put a vehicle with an automatic transmission in Park (P), a manual transmission in Reverse (R) or 1, and turn off the engine.
3. Turn on the hazard warning flasher.
4. Have everyone get out of the vehicle and away from the vehicle and traffic.
5. Remove the jack, and tool (page 7-5).
6. Block the wheel diagonally opposite the tire to be changed. When blocking a wheel, place a tire block both in front and behind the tire.

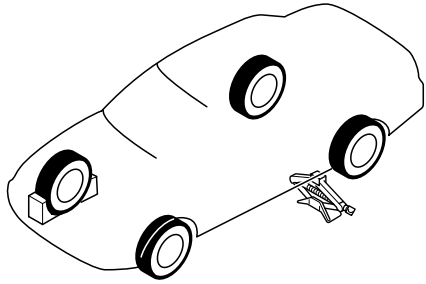

NOTE

When blocking a tire, use rocks or wood blocks of sufficient size if possible to hold the tire in place.

▼Removing a Tire

1. Loosen the lug nuts by turning them counterclockwise one turn each, but do not remove any until the tire has been raised off the ground.

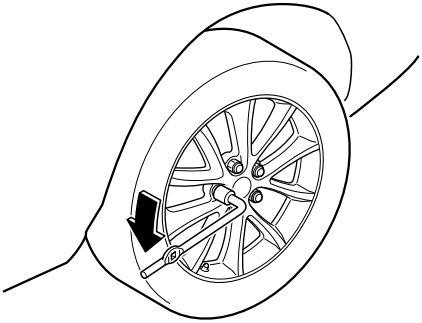

2. Place the jack under the jacking position closest to the tire being changed.

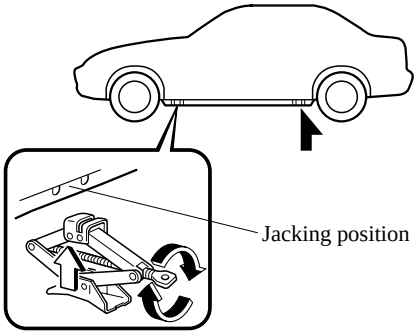

⚠ WARNING

Use only the front and rear jacking positions recommended in this manual:

Attempting to jack the vehicle in positions other than those recommended in this manual is dangerous. The vehicle could slip off the jack and seriously injure or even kill someone. Use only the front and rear jacking positions recommended in this manual.

Use only the jack provided with your Mazda:

Using a jack that is not designed for your Mazda is dangerous. The vehicle could slip off the jack and seriously injure someone.

Never place objects under the jack:

Jacking the vehicle with an object under the jack is dangerous. The jack could slip and someone could be seriously injured by the jack or the falling vehicle.

3. Insert the jack handle into the jack.

4. Turn the jack handle clockwise and raise the vehicle high enough so that the tire can be installed. Before removing the lug nuts, make sure your Mazda is firmly in position and that it cannot slip or move.

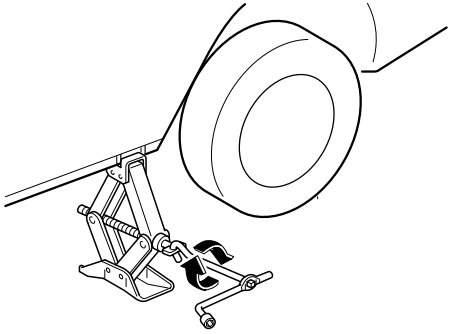

5. Remove the lug nuts by turning them counterclockwise, then remove the wheel.

▼Locking Lug Nuts*

If your vehicle has optional antitheft wheel lug nuts, one on each wheel will lock the tires and you must use a special key to unlock them. This key is attached to the lug wrench. Register them with the lock manufacturer by filling out the card provided in the glove box and mailing it in the accompanying envelope. If you lose this key, consult an Authorized Mazda Dealer or use the lock manufacturer's order form, which is with the registration card.

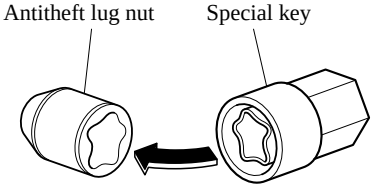

To remove an antitheft lug nut

1. Obtain the key for the antitheft lug nut.
2. Place the key on top of the nut, and be sure to hold the key square to it. If you hold the key at an angle, you may damage both key and nut. Don't use a power impact wrench.
3. Place the lug wrench on top of the key and apply pressure. Turn the wrench counterclockwise.

*Some models.

To install the nut

1. Place the key on top of the nut, and be sure to hold the key square to it. If you hold the key at an angle, you may damage both key and nut. Don't use a power impact wrench.
2. Place the lug wrench on top of the key, apply pressure, and turn it clockwise.

▼Mounting the Tire

1. Remove dirt and grime from the mounting surfaces of the wheel and hub, including the hub bolts, with a cloth.

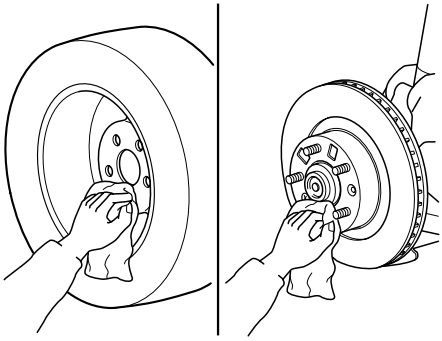

⚠ WARNING

Make sure the mounting surfaces of the wheel, hub and lug nuts are clean before changing or replacing tires:

When changing or replacing a tire, not removing dirt and grime from the mounting surfaces of the wheel, hub and hub bolts is dangerous. The lug nuts could loosen while driving and cause the tire to come off, resulting in an accident.

2. Mount the tire.
3. Install the lug nuts with the beveled edge inward; tighten them by hand.

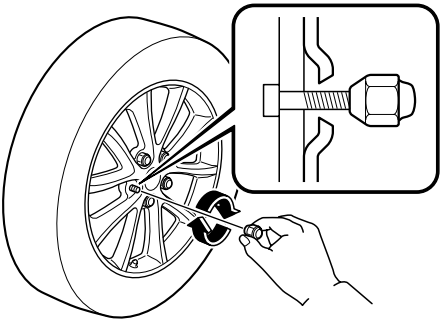

⚠ WARNING

Do not apply oil or grease to lug nuts and bolts and do not tighten the lug nuts beyond the recommended tightening torque:

Applying oil or grease to lug nuts and bolts is dangerous. The lug nuts could loosen while driving and cause the tire to come off, resulting in an accident. In addition, lug nuts and bolts could be damaged if tightened more than necessary.

4. Turn the jack handle counterclockwise and lower the vehicle. Use the lug wrench to tighten the nuts in the order shown.

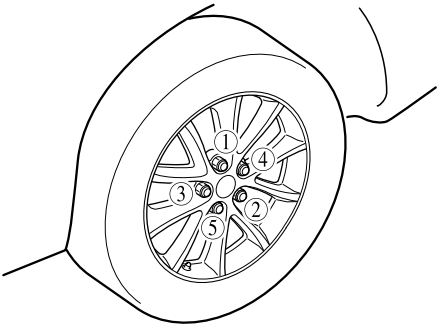

If you're unsure of how tight the nuts should be, have them inspected at an Authorized Mazda Dealer.

Nut tightening torque	
N·m (kgf·m, ft·lbf)	88 118 (9 12, 65 87)

WARNING

Always securely and correctly tighten the lug nuts:

Improperly or loosely tightened lug nuts are dangerous. The wheel could wobble or come off. This could result in loss of vehicle control and cause a serious accident.

Be sure to reinstall the same nuts you removed or replace them with metric nuts of the same configuration:

Because the wheel studs and lug nuts on your Mazda have metric threads, using a non-metric nut is dangerous. On a metric stud, it would not secure the wheel and would damage the stud, which could cause the wheel to slip off and cause an accident.

5. Remove the tire blocks and store the tools, jack, and damaged tire.
6. Check the inflation pressure. Refer to the specification charts on page 10-7.
7. Have the flat tire repaired or replaced as soon as possible.

WARNING

Do not drive with any tires that have incorrect air pressure:

Driving on tires with incorrect air pressure is dangerous. Tires with incorrect pressure could affect handling and result in an accident.

NOTE

To prevent the jack and tool from rattling, store them properly.

(With Tire Pressure Monitoring System)

A tire pressure sensor is not installed to the temporary spare tire. The warning light will flash continuously while the temporary spare tire is being used (page 5-32).

Overheating

If the temperature gauge indicates overheating, the vehicle loses power, or you hear a loud knocking or pinging noise, the engine is probably too hot.

⚠ WARNING

Turn off the ignition switch and make sure the fan is not running before attempting to work near the cooling fan:

Working near the cooling fan when it is running is dangerous. The fan could continue running indefinitely even if the engine has stopped and the engine compartment temperature is high. You could be hit by the fan and seriously injured.

Do not remove the cooling system cap when the engine and radiator are hot:

When the engine and radiator are hot, scalding coolant and steam may shoot out under pressure and cause serious injury.

Open the hood ONLY after steam is no longer escaping from the engine:

Steam from an overheated engine is dangerous. The escaping steam could seriously burn you.

NOTE

Once the engine coolant exceeds a preset temperature, an electrical cooling fan turns on. It will continue running for about 10 minutes after the ignition switch is turned to off.

If the temperature gauge indicates overheating:

1. Drive safely to the side of the road and park off the right-of-way.
2. Put a vehicle with an automatic transmission in park (P), a manual transmission in neutral.
3. Apply the parking brake.
4. Turn off the air conditioner.
5. Check whether coolant or steam is escaping from under the hood or from the engine compartment.

   If steam is coming from the engine compartment:
   Do not go near the front of the vehicle.
   Stop the engine.
   Wait until the steam dissipates, then open the hood and start the engine.

   If neither coolant nor steam is escaping:
   Open the hood and idle the engine until it cools.

⚠ CAUTION

If the cooling fan does not operate while the engine is running, the engine temperature will increase. Stop the engine and call an Authorized Mazda Dealer.

6. Make sure the cooling fan is operating, then turn off the engine after the temperature has decreased.
7. When cool, check the coolant reservoir level.
   If it's low, look for coolant leaks from the radiator and hoses.

If you find a leak or other damage, or if coolant is still leaking:
Stop the engine and call an Authorized Mazda Dealer.

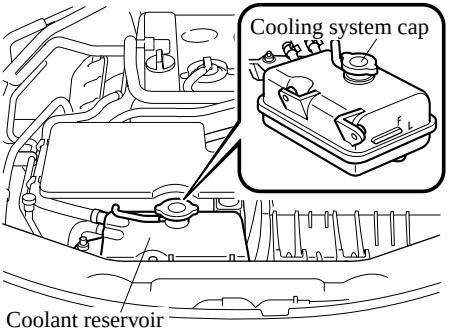

If you find no problems, the engine is cool, and no leaks are obvious:
Carefully add coolant as required (page 8-20).

CAUTION

If the engine continues to overheat or frequently overheats, have the cooling system inspected. The engine could be seriously damaged unless repairs are made. Consult an Authorized Mazda Dealer.

Starting a Flooded Engine

If the engine fails to start, it may be flooded (excessive fuel in the engine).

Follow this procedure:

1. If the engine does not start within five seconds on the first try, switch the ignition off, wait ten seconds and try again.
2. Depress the accelerator all the way and hold it there.
3. Switch the ignition to START and hold it there for up to ten seconds. If the engine starts, release the key and accelerator immediately because the engine will suddenly rev up.
4. If the engine fails to start, crank it without depressing the accelerator for up to ten seconds.

If the engine still does not start using the above procedure, have your vehicle inspected by an Authorized Mazda Dealer.

Jump-Starting

Jump-starting is dangerous if done incorrectly. So follow the procedure carefully. If you feel unsure about jump-starting, we strongly recommend that you have a competent service technician do the work.

WARNING

Follow These Precautions Carefully:
To ensure safe and correct handling of the battery, read the following precautions carefully before using the battery or inspecting it.

Always wear eye protection when working near the battery:
Working without eye protection is dangerous. Battery fluid contains SULFURIC ACID which could cause blindness if splashed into your eyes. Also, hydrogen gas produced during normal battery operation, could ignite and cause the battery to explode.

Wear eye protection and protective gloves to prevent contact with battery fluid:
Spilled battery fluid is dangerous.
Battery fluid contains SULFURIC ACID which could cause serious injuries if it gets in eyes, skin or clothing. If this happens, immediately flush your eyes with water for 15 minutes or wash your skin thoroughly and get medical attention.

Always keep batteries out of the reach of children:
Allowing children to play near batteries is dangerous. Battery fluid could cause serious injuries if it gets in the eyes or on the skin.

Do not allow the positive (+) terminal to contact any other metal object that could cause sparks:
Flames and sparks near open battery cells are dangerous. Hydrogen gas, produced during normal battery operation, could ignite and cause the battery to explode. An exploding battery can cause serious burns and injuries. When working near a battery, do not allow metal tools to contact the positive (+) or negative (–) terminal of the battery.

Emergency Starting

Keep all flames, including cigarettes, and sparks away from open battery cells:
Flames and sparks near open battery cells are dangerous. Hydrogen gas, produced during normal battery operation, could ignite and cause the battery to explode. An exploding battery can cause serious burns and injuries.

Do not jump-start a frozen battery or one with a low fluid level:
Jump-starting a frozen battery or one with a low fluid level is dangerous. It may rupture or explode, causing serious injury.

Connect the negative cable to a good ground point away from the battery:
Connecting the end of the second jumper cable to the negative (–) terminal of the discharged battery is dangerous.
A spark could cause the gas around the battery to explode and injure someone.

Route the jumper cables away from parts that will be moving:
Connecting a jumper cable near or to moving parts (cooling fans, belts) is dangerous. The cable could get caught when the engine starts and cause serious injury.

CAUTION

Use only a 12 V booster system. You can damage a 12 V starter, ignition system, and other electrical parts beyond repair with a 24 V power supply (two 12 V batteries in series or a 24 V motor generator set).

Connect cables in numerical order and disconnect in reverse order.

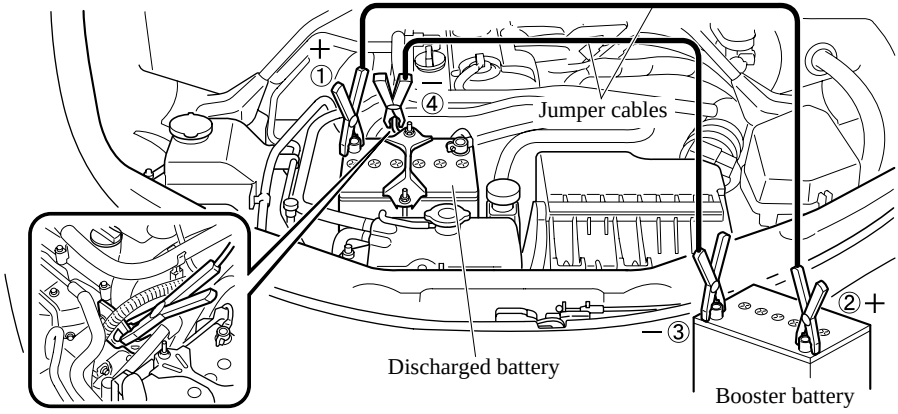

1. Remove the rubber hose from the battery cover.

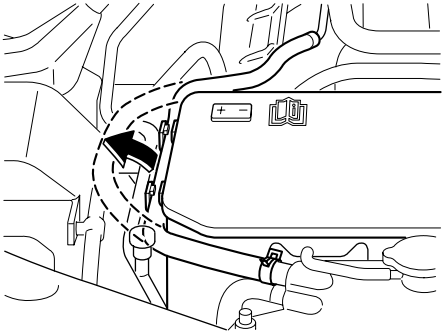

2. Remove the battery cover from its right side.

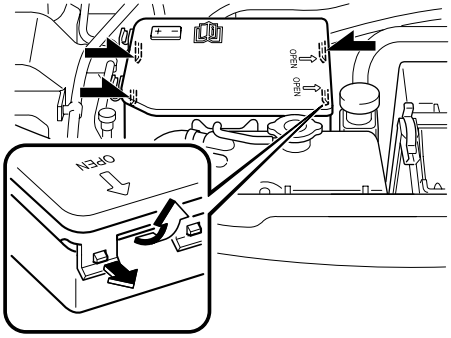

3. Make sure the booster battery is 12 V and that its negative terminal is grounded.
4. If the booster battery is in another vehicle, don't allow both vehicles to touch. Turn off the engine of the vehicle with the booster battery and all unnecessary electrical loads in both vehicles.
5. Connect the jumper cables in the exact sequence as in the illustration.
   - Connect one end of a cable to the positive terminal on the discharged battery (1).
   - Attach the other end to the positive terminal on the booster battery (2).
   - Connect one end of the other cable to the negative terminal of the booster battery (3).
   - Connect the other end to the ground point indicated in the illustration away from the discharged battery (4).
6. Start the engine of the booster vehicle and run it a few minutes. Then start the engine of the other vehicle.
7. When finished, carefully disconnect the cables in the reverse order described in the illustration.
8. If the battery cover has been removed, install it in the reverse order of removal.

NOTE

- *Before installing the battery cover, make sure both of the cables connecting the negative battery terminal (right side of battery) are connected with the cables routed toward the right and back of the battery as shown in the figure.*

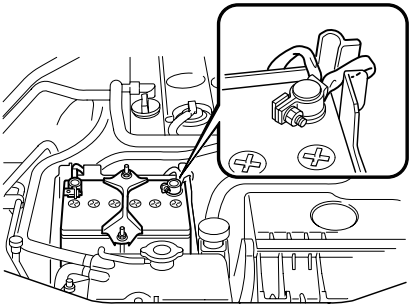

- *Verify that the covers are securely installed.*

Push-Starting

Do not push-start your Mazda.

WARNING

Never tow a vehicle to start it:

Towing a vehicle to start it is dangerous. The vehicle being towed could surge forward when its engine starts, causing the two vehicles to collide. The occupants could be injured.

CAUTION

Do not push-start a vehicle that has a manual transmission. It can damage the emission control system.

NOTE

You can't start a vehicle with an automatic transmission by pushing it.

Towing Description

We recommend that towing be done only by an Authorized Mazda Dealer or a commercial tow-truck service.

Proper lifting and towing are necessary to prevent damage to the vehicle. Government and local laws must be followed.

A towed vehicle usually should have its drive wheels (rear wheels) off the ground. If excessive damage or other conditions prevent this, use wheel dollies.

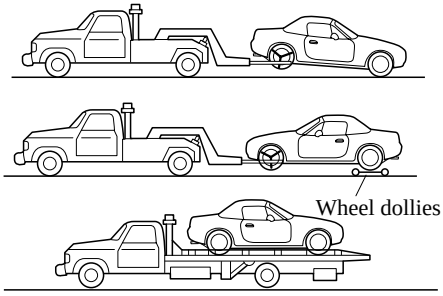

⚠ CAUTION

Do not tow the vehicle pointed forward with driving wheels on the ground. This may cause internal damage to the transmission.

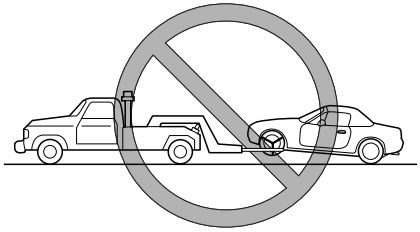

⚠ CAUTION

Do not tow with sling-type equipment. This could damage your vehicle. Use wheel-lift or flatbed equipment.

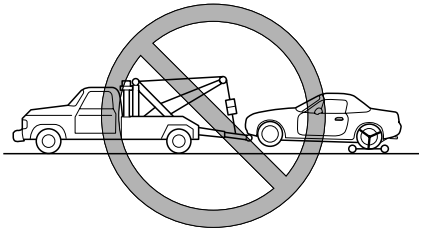

Tiedown Hooks

⚠ CAUTION

Do not use the front and rear tiedown eyelets for towing the vehicle.
They have been designed only for securing the vehicle to a transport vessel during shipping.
Using the eyelets for any other purpose could result in the vehicle being damaged.

▼Tiedown Hooks

1. Remove the tiedown eyelet, lug wrench, and jack lever from the trunk (page 7-5).
2. Wrap the jack lever with a soft cloth to prevent damage to a painted bumper, and open the cap located on the front or rear bumper.

Front

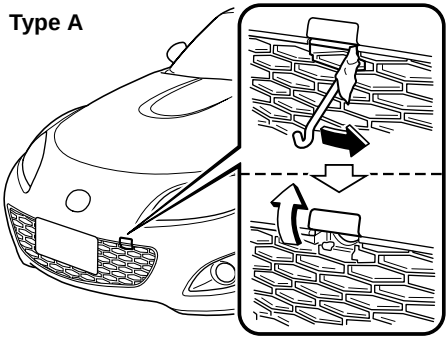

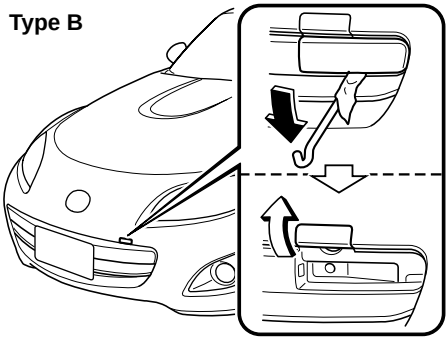

Rear

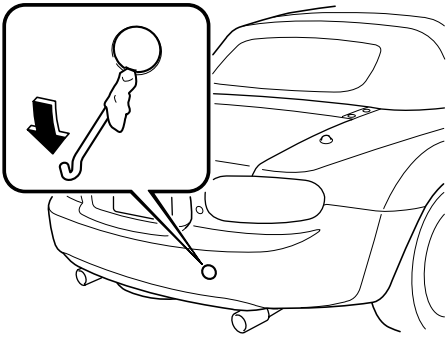

⚠ CAUTION

- *Do not use excessive force as it may damage the cap or scratch the painted bumper surface.*
- *The rear bumper cover cannot be removed completely. Attempting to forcefully remove the rear bumper cover could result in it being damaged.*

NOTE
Remove the front bumper cover completely and store it so as not to lose it.

3. Securely install the tiedown eyelet using the lug wrench.

Front

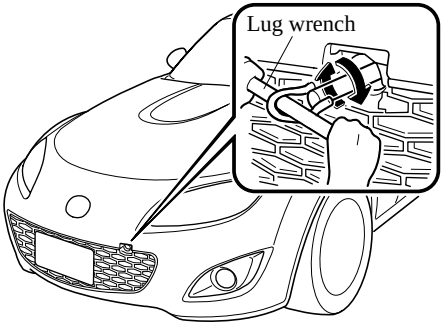

Rear

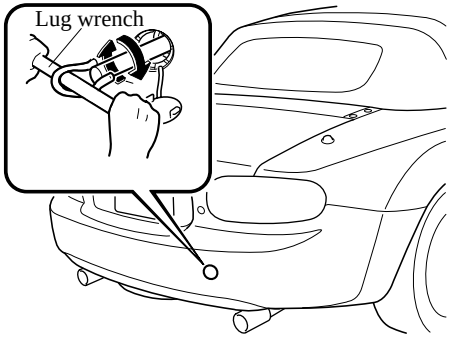

4. Hook the tying rope to the tiedown eyelet.

Front

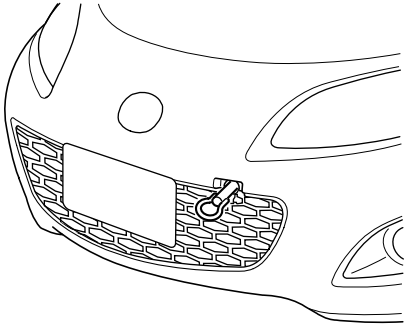

Rear

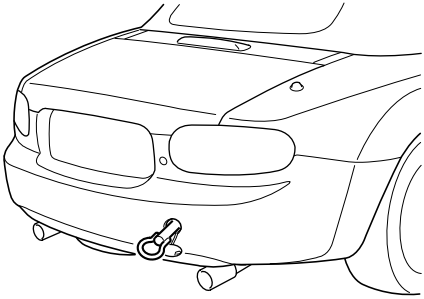

⚠ CAUTION

If the tiedown eyelet is not securely tightened, it may loosen or disengage from the bumper when tying down the vehicle. Make sure that the tiedown eyelet is securely tightened to the bumper.

Recreational Towing

An example of “recreational towing” is towing your vehicle behind a motorhome. The transmission is not designed for towing this vehicle on all 4 wheels.
When doing recreational towing refer to “Towing Description” (page 7-25) and “Tiedown Hooks” (page 7-26) and carefully follow the instructions.

8 Maintenance and Care

How to keep your Mazda in top condition.

Introduction 8-2
Introduction 8-2

Scheduled Maintenance 8-3
Scheduled Maintenance (USA, Canada, and Puerto Rico) 8-3
Scheduled Maintenance (Mexico) 8-8

Owner Maintenance 8-15
Owner Maintenance Schedule 8-15
Owner Maintenance Precautions 8-16
Engine Compartment Overview 8-17
Engine Oil 8-18
Engine Coolant 8-20
Brake/Clutch Fluid 8-22
Power Steering Fluid 8-23
Washer Fluid 8-23
Body Lubrication 8-24
Wiper Blades 8-25
Battery 8-27
Tires 8-30
Light Bulbs 8-36
Fuses 8-44

Appearance Care 8-50
How to Minimize Environmental Paint Damage 8-50
Exterior Care 8-52
Interior Care 8-57

Introduction

Be extremely careful and prevent injury to yourself and others or damage to your vehicle when using this manual for inspection and maintenance.

If you are unsure about any procedure it describes, we strongly urge you to have a reliable and qualified service shop perform the work, preferably an Authorized Mazda Dealer.

Factory-trained Mazda technicians and genuine Mazda parts are best for your vehicle. Without this expertise and the parts that have been designed and made especially for your Mazda, inadequate, incomplete, and insufficient servicing may result in problems. This could lead to vehicle damage or an accident and injuries.

For expert advice and quality service, consult an Authorized Mazda Dealer.

The owner should retain evidence that proper maintenance has been performed as prescribed.

Claims against the warranty resulting from lack of maintenance, as opposed to defective materials or authorized Mazda workmanship, will not be honored.

Any auto repair shop using parts equivalent to your Mazda's original equipment may perform maintenance. **But we recommend that it always be done by an Authorized Mazda Dealer using genuine Mazda parts.**

Scheduled Maintenance (USA, Canada, and Puerto Rico)

Follow Schedule 1 if the vehicle is operated mainly where none of the following conditions apply.

- Repeated short-distance driving
- Driving in dusty conditions
- Driving with extended use of brakes
- Driving in areas where salt or other corrosive materials are used
- Driving on rough or muddy roads
- Extended periods of idling or low-speed operation
- Driving for long periods in cold temperatures or extremely humid climates
- Driving in extremely hot conditions
- Driving in mountainous conditions continually

If any do apply, follow Schedule 2 (Canada and Puerto Rico residents follow Schedule 2).

NOTE

After the prescribed period, continue to follow the described maintenance at the recommended intervals.

Scheduled Maintenance

▼Schedule 1

Maintenance Interval		Number of months or kilometers (miles), whichever comes first							
	Months	6	12	18	24	30	36	42	48
	×1000 km	12	24	36	48	60	72	84	96
	×1000 miles	7.5	15	22.5	30	37.5	45	52.5	60
ENGINE									
Drive belts						I			
Engine valve clearance		Audibly inspect every 120,000 km (75,000 miles), if noisy, adjust							
Engine oil		R	R	R	R	R	R	R	R
Engine oil filter		R	R	R	R	R	R	R	R
COOLING SYSTEM									
Engine coolant	FL22 type*1	Replace at first 192,000 km (120,000 miles) or 10 years; after that, every 96,000 km (60,000 miles) or 5 years							
	Others	Replace at first 96,000 km (60,000 miles) or 4 years; after that, every 2 years							
FUEL SYSTEM									
Air filter			C		C	R		C	
Fuel lines and hoses*2					I				I
Hoses and tubes for emission*2									I
IGNITION SYSTEM									
Spark plugs		Replace every 120,000 km (75,000 miles)							

Maintenance Interval	Number of months or kilometers (miles), whichever comes first								
	Months	**6**	**12**	**18**	**24**	**30**	**36**	**42**	**48**
	×1000 km	**12**	**24**	**36**	**48**	**60**	**72**	**84**	**96**
	×1000 miles	**7.5**	**15**	**22.5**	**30**	**37.5**	**45**	**52.5**	**60**
CHASSIS and BODY									
Brake lines, hoses and connections					I				I
Disc brakes			I		I		I		I
Tire (Rotation)		Rotate every 12,000 km (7,500 miles)							
Flat tire repair kit (if installed)*3		Inspect annually							
Steering operation and linkages					I				I
Front and rear suspension, ball joints and wheel bearing axial play					I				I
Manual transmission oil									R
Rear differential oil									R
Driveshaft dust boots					I				I
Bolts and nuts on chassis and body					T				T
Exhaust system and heat shields		Inspect every 72,000 km (45,000 miles) or 5 years							
All locks and hinges		L	L	L	L	L	L	L	L

Chart symbols:

I: Inspect: Inspect and clean, repair, adjust, fill up, or replace if necessary.
R: Replace
C: Clean
L: Lubricate
T: Tighten

Remarks:

*1 Use FL22 type coolant in vehicles with the inscription “FL22” on the radiator cap itself or the surrounding area. Use FL22 when replacing the coolant.
*2 According to state/provincial and federal regulations, failure to perform maintenance on these items will not void your emissions warranties. However, Mazda recommends that all maintenance services be performed at the recommended time or mileage/kilometer period to ensure long-term reliability.
*3 Check the tire repair fluid expiration date every year when performing the periodic maintenance. Replace the tire repair fluid bottle with new one before the expiration date.

▼Schedule 2

Maintenance Interval		Number of months or kilometers (miles), whichever comes first											
		Months	**4**	**8**	**12**	**16**	**20**	**24**	**28**	**32**	**36**	**40**	**44**	**48**
		×1000 km	**8**	**16**	**24**	**32**	**40**	**48**	**56**	**64**	**72**	**80**	**88**	**96**
		×1000 miles	**5**	**10**	**15**	**20**	**25**	**30**	**35**	**40**	**45**	**50**	**55**	**60**
ENGINE														
Drive belts									I					
Engine valve clearance			Audibly inspect every 120,000 km (75,000 miles), if noisy, adjust											
Engine oil	Puerto Rico		Replace every 5,000 km (3,000 miles) or 3 months											
	Others		R	R	R	R	R	R	R	R	R	R	R	R
Engine oil filter			R	R	R	R	R	R	R	R	R	R	R	R
COOLING SYSTEM														
Engine coolant	FL22 type*1		Replace at first 192,000 km (120,000 miles) or 10 years; after that, every 96,000 km (60,000 miles) or 5 years											
	Others		Replace at first 96,000 km (60,000 miles) or 4 years; after that, every 2 years											
Engine coolant level			I	I	I	I	I	I	I	I	I	I	I	I
FUEL SYSTEM														
Air filter	Puerto Rico				C			R			C			R
	Others				C			C	R			C		
Fuel lines and hoses*2								I						I
Hoses and tubes for emission*2														I
IGNITION SYSTEM														
Spark plugs	USA		Replace every 96,000 km (60,000 miles)											
	Others		Replace every 120,000 km (75,000 miles)											
ELECTRICAL SYSTEM														
Function of all lights			I	I	I	I	I	I	I	I	I	I	I	I

Maintenance Interval	Number of months or kilometers (miles), whichever comes first												
	Months	**4**	**8**	**12**	**16**	**20**	**24**	**28**	**32**	**36**	**40**	**44**	**48**
	×1000 km	**8**	**16**	**24**	**32**	**40**	**48**	**56**	**64**	**72**	**80**	**88**	**96**
	×1000 miles	**5**	**10**	**15**	**20**	**25**	**30**	**35**	**40**	**45**	**50**	**55**	**60**
CHASSIS and BODY													
Brake lines, hoses and connections							I						I
Brake fluid level		I	I	I	I	I	I	I	I	I	I	I	I
Disc brakes				I			I			I			I
Tire (Rotation)		Rotate every 8,000 km (5,000 miles)											
Tire inflation pressure and tire wear		I	I	I	I	I	I	I	I	I	I	I	I
Flat tire repair kit (if installed)*3		Inspect annually											
Steering operation and linkages							I						I
Power steering fluid level		I	I	I	I	I	I	I	I	I	I	I	I
Front and rear suspension, ball joints and wheel bearing axial play							I						I
Manual transmission oil							R						R
Rear differential oil							R						R
Driveshaft dust boots							I						I
Bolts and nuts on chassis and body							T						T
Exhaust system and heat shields		Inspect every 72,000 km (45,000 miles) or 5 years											
All locks and hinges		L	L	L	L	L	L	L	L	L	L	L	L
Washer fluid level		I	I	I	I	I	I	I	I	I	I	I	I

Chart symbols:

I: Inspect: Inspect and clean, repair, adjust, fill up, or replace if necessary.
R: Replace
C: Clean
L: Lubricate
T: Tighten

Remarks:

*1 Use FL22 type coolant in vehicles with the inscription “FL22” on the radiator cap itself or the surrounding area. Use FL22 when replacing the coolant.
*2 According to state/provincial and federal regulations, failure to perform maintenance on these items will not void your emissions warranties. However, Mazda recommends that all maintenance services be performed at the recommended time or mileage/kilometer period to ensure long-term reliability.
*3 Check the tire repair fluid expiration date every year when performing the periodic maintenance. Replace the tire repair fluid bottle with new one before the expiration date.

Scheduled Maintenance (Mexico)

Follow Schedule 1 if the vehicle is operated mainly where none of the following conditions apply.

- Repeated short-distance driving
- Driving in dusty conditions
- Driving with extended use of brakes
- Driving in areas where salt or other corrosive materials are used
- Driving on rough or muddy roads
- Extended periods of idling or low-speed operation
- Driving for long periods in cold temperatures or extremely humid climates
- Driving in extremely hot conditions
- Driving in mountainous conditions continually

If any do apply, follow Schedule 2.

NOTE

After the prescribed period, continue to follow the described maintenance at the recommended intervals.

▼Schedule 1

Maintenance Interval		Number of months or kilometers, whichever comes first											
	Months	6	12	18	24	30	36	42	48	54	60	66	72
	×1000 km	10	20	30	40	50	60	70	80	90	100	110	120
ENGINE													
Drive belts					I				I				I
Engine valve clearance		Audibly inspect every 120,000 km, if noisy, adjust											
Engine oil		R	R	R	R	R	R	R	R	R	R	R	R
Engine oil filter		R	R	R	R	R	R	R	R	R	R	R	R
COOLING SYSTEM													
Cooling system					I				I				I
Engine coolant	FL22 type*1	Replace at first 190,000 km or 10 years; after that, every 60,000 km or 3 years											
	Others				R				R				R
FUEL SYSTEM													
Air filter			R		R		R		R		R		R
Fuel lines and hoses					I*2				I*2				I
Hoses and tubes for emission					I*2				I*2				I
Fuel filter					R				R				R
IGNITION SYSTEM													
Spark plugs		Replace every 60,000 km											

Scheduled Maintenance

Maintenance Interval	Number of months or kilometers, whichever comes first											
	Months	6	12	18	24	30	36	42	48	54	60	66	72
	×1000 km	10	20	30	40	50	60	70	80	90	100	110	120
CHASSIS and BODY													
Brake lines, hoses and connections			I		I		I		I		I		I
Brake fluid level		I	I	I		I	I	I		I	I	I	
Brake fluid					R				R				R
Disc brakes		I	I	I	I	I	I	I	I	I	I	I	I
Tire (Rotation)		Rotate every 10,000 km											
Tire inflation pressure and tire wear		I	I	I	I	I	I	I	I	I	I	I	I
Flat tire repair kit (if installed)*3		Inspect annually											
Steering operation and linkages		I	I	I	I	I	I	I	I	I	I	I	I
Power steering fluid level		I	I	I	I	I	I	I	I	I	I	I	I
Front and rear suspension, ball joints and wheel bearing axial play			I		I		I		I		I		I
Manual transmission oil									R				
Rear differential oil					R				R				R
Driveshaft dust boots			I		I		I		I		I		I
Exhaust system and heat shields			I		I		I		I		I		I
Bolts and nuts on chassis and body			T		T		T		T		T		T
All locks and hinges		L	L	L	L	L	L	L	L	L	L	L	L
Washer fluid level		I	I	I	I	I	I	I	I	I	I	I	I

Chart symbols:

I: Inspect: Inspect and clean, repair, adjust, fill up, or replace if necessary.
R: Replace
L: Lubricate
T: Tighten

Remarks:

*1 Use FL22 type coolant in vehicles with the inscription “FL22” on the radiator cap itself or the surrounding area. Use FL22 when replacing the coolant.
*2 According to state/provincial and federal regulations, failure to perform maintenance on these items will not void your emissions warranties. However, Mazda recommends that all maintenance services be performed at the recommended time or kilometer period to ensure long-term reliability.
*3 Check the tire repair fluid expiration date every year when performing the periodic maintenance. Replace the tire repair fluid bottle with new one before the expiration date.

▼Schedule 2

Maintenance Interval		Number of months or kilometers, whichever comes first											
	Months	3	6	9	12	15	18	21	24	27	30	33	36
	×1000 km	5	10	15	20	25	30	35	40	45	50	55	60
ENGINE													
Drive belts									I				
Engine valve clearance		Audibly inspect every 120,000 km, if noisy, adjust											
Engine oil		R	R	R	R	R	R	R	R	R	R	R	R
Engine oil filter		R	R	R	R	R	R	R	R	R	R	R	R
COOLING SYSTEM													
Cooling system									I				
Engine coolant	FL22 type*1	Replace at first 190,000 km or 10 years; after that, every 60,000 km or 3 years											
	Others								R				
Engine coolant level		I	I	I	I	I	I	I	I	I	I	I	I
FUEL SYSTEM													
Air filter			C		R		C		R		C		R
Fuel lines and hoses									I*2				
Hoses and tubes for emission									I*2				
Fuel filter									R				
IGNITION SYSTEM													
Spark plugs		Replace every 60,000 km											
ELECTRICAL SYSTEM													
Function of all lights		I	I	I	I	I	I	I	I	I	I	I	I

Scheduled Maintenance

Maintenance Interval	Number of months or kilometers, whichever comes first												
	Months	3	6	9	12	15	18	21	24	27	30	33	36
	×1000 km	5	10	15	20	25	30	35	40	45	50	55	60
CHASSIS and BODY													
Brake lines, hoses and connections					I				I				I
Brake fluid level			I		I		I				I		I
Brake fluid									R				
Disc brakes			I		I		I		I		I		I
Tire (Rotation)	Rotate every 10,000 km												
Tire inflation pressure and tire wear			I		I		I		I		I		I
Flat tire repair kit (if installed)*3	Inspect annually												
Steering operation and linkages			I		I		I		I		I		I
Power steering fluid level			I		I		I		I		I		I
Front and rear suspension, ball joints and wheel bearing axial play					I				I				I
Manual transmission oil									R				
Rear differential oil									R				
Driveshaft dust boots					I				I				I
Exhaust system and heat shields					I				I				I
Bolts and nuts on chassis and body					T				T				T
All locks and hinges			L		L		L		L		L		L
Washer fluid level			I		I		I		I		I		I

Chart symbols:

I: Inspect: Inspect and clean, repair, adjust, fill up, or replace if necessary.
R: Replace
C: Clean
L: Lubricate
T: Tighten

Remarks:

*1 Use FL22 type coolant in vehicles with the inscription “FL22” on the radiator cap itself or the surrounding area. Use FL22 when replacing the coolant.
*2 According to state/provincial and federal regulations, failure to perform maintenance on these items will not void your emissions warranties. However, Mazda recommends that all maintenance services be performed at the recommended time or kilometer period to ensure long-term reliability.
*3 Check the tire repair fluid expiration date every year when performing the periodic maintenance. Replace the tire repair fluid bottle with new one before the expiration date.

(Cont.)

Maintenance Interval		Number of months or kilometers, whichever comes first											
	Months	39	42	45	48	51	54	57	60	63	66	69	72
	×1000 km	65	70	75	80	85	90	95	100	105	110	115	120
ENGINE													
Drive belts					I								I
Engine valve clearance		Audibly inspect every 120,000 km, if noisy, adjust											
Engine oil		R	R	R	R	R	R	R	R	R	R	R	R
Engine oil filter		R	R	R	R	R	R	R	R	R	R	R	R
COOLING SYSTEM													
Cooling system					I								I
Engine coolant	FL22 type*1	Replace at first 190,000 km or 10 years; after that, every 60,000 km or 3 years											
	Others				R								R
Engine coolant level		I	I	I	I	I	I	I	I	I	I	I	I
FUEL SYSTEM													
Air filter			C		R		C		R		C		R
Fuel lines and hoses					I*2								I
Hoses and tubes for emission					I*2								I
Fuel filter					R								R
IGNITION SYSTEM													
Spark plugs		Replace every 60,000 km											
ELECTRICAL SYSTEM													
Function of all lights		I	I	I	I	I	I	I	I	I	I	I	I

Scheduled Maintenance

Maintenance Interval	Number of months or kilometers, whichever comes first											
	Months	39	42	45	48	51	54	57	60	63	66	69	72
	×1000 km	65	70	75	80	85	90	95	100	105	110	115	120
CHASSIS and BODY													
Brake lines, hoses and connections					I				I				I
Brake fluid level			I				I		I		I		
Brake fluid					R								R
Disc brakes			I		I		I		I		I		I
Tire (Rotation)	Rotate every 10,000 km												
Tire inflation pressure and tire wear			I		I		I		I		I		I
Flat tire repair kit (if installed)*3	Inspect annually												
Steering operation and linkages			I		I		I		I		I		I
Power steering fluid level			I		I		I		I		I		I
Front and rear suspension, ball joints and wheel bearing axial play					I				I				I
Manual transmission oil					R								R
Rear differential oil					R								R
Driveshaft dust boots					I				I				I
Exhaust system and heat shields					I				I				I
Bolts and nuts on chassis and body					T				T				T
All locks and hinges			L		L		L		L		L		L
Washer fluid level			I		I		I		I		I		I

Chart symbols:

I: Inspect: Inspect and clean, repair, adjust, fill up, or replace if necessary.
R: Replace
C: Clean
L: Lubricate
T: Tighten

Remarks:

*1 Use FL22 type coolant in vehicles with the inscription “FL22” on the radiator cap itself or the surrounding area. Use FL22 when replacing the coolant.
*2 According to state/provincial and federal regulations, failure to perform maintenance on these items will not void your emissions warranties. However, Mazda recommends that all maintenance services be performed at the recommended time or kilometer period to ensure long-term reliability.
*3 Check the tire repair fluid expiration date every year when performing the periodic maintenance. Replace the tire repair fluid bottle with new one before the expiration date.

Owner Maintenance Schedule

The owner or a qualified service technician should make these vehicle inspections at the indicated intervals to ensure safe and dependable operation.

Bring any problem to the attention of an Authorized Mazda Dealer or qualified service technician as soon as possible.

▼When Refueling

- Brake and clutch fluid level (page 8-22)
- Engine coolant level (page 8-20)
- Engine oil level (page 8-19)
- Washer fluid level (page 8-23)

▼At Least Monthly

Tire inflation pressures (page 8-30)

▼At Least Twice a Year (For Example, Every Spring and Fall)

- Power steering fluid level (page 8-23)

You can do the following scheduled maintenance items if you have some mechanical ability and a few basic tools and if you closely follow the directions in this manual.

- Engine coolant (page 8-20)
- Engine oil (page 8-18)

Owner Maintenance Precautions

Improper or incomplete service may result in problems. This section gives instructions only for items that are easy to perform.

As explained in the Introduction (page 8-2), several procedures can be done only by a qualified service technician with special tools.

Improper owner maintenance during the warranty period may affect warranty coverage. For details, read the separate Mazda Warranty statement provided with the vehicle. If you're unsure about any servicing or maintenance procedure, have it done by an Authorized Mazda Dealer.

There are strict environmental laws regarding the disposal of waste oil and fluids. Please dispose of your waste properly and with due regard to the environment.

We recommend that you entrust the oil and fluid changes of your vehicle to an Authorized Mazda Dealer.

⚠ WARNING

Do not perform maintenance work if you lack sufficient knowledge and experience or the proper tools and equipment to do the work. Have maintenance work done by a qualified technician:

Performing maintenance work on a vehicle is dangerous if not done properly. You can be seriously injured while performing some maintenance procedures.

If you must run the engine while working under the hood, make certain that you remove all jewelry (especially rings, bracelets, watches, and necklaces) and all neckties, scarves, and similar loose clothing before getting near the engine or cooling fan which may turn on unexpectedly:

Working under the hood with the engine running is dangerous. It becomes even more dangerous when you wear jewelry or loose clothing.
Either can become entangled in moving parts and result in injury.

Turn off the ignition switch and make sure the fan is not running before attempting to work near the cooling fan:

Working near the cooling fan when it is running is dangerous. The fan could continue running indefinitely even if the engine has stopped and the engine compartment temperature is high. You could be hit by the fan and seriously injured.

Do not leave items in the engine compartment:

After you have finished checking or doing servicing in the engine compartment, do not forget and leave items such as tools or rags in the engine compartment.
Tools or other items left in the engine compartment could cause engine damage or a fire leading to an unexpected accident.

Engine Compartment Overview

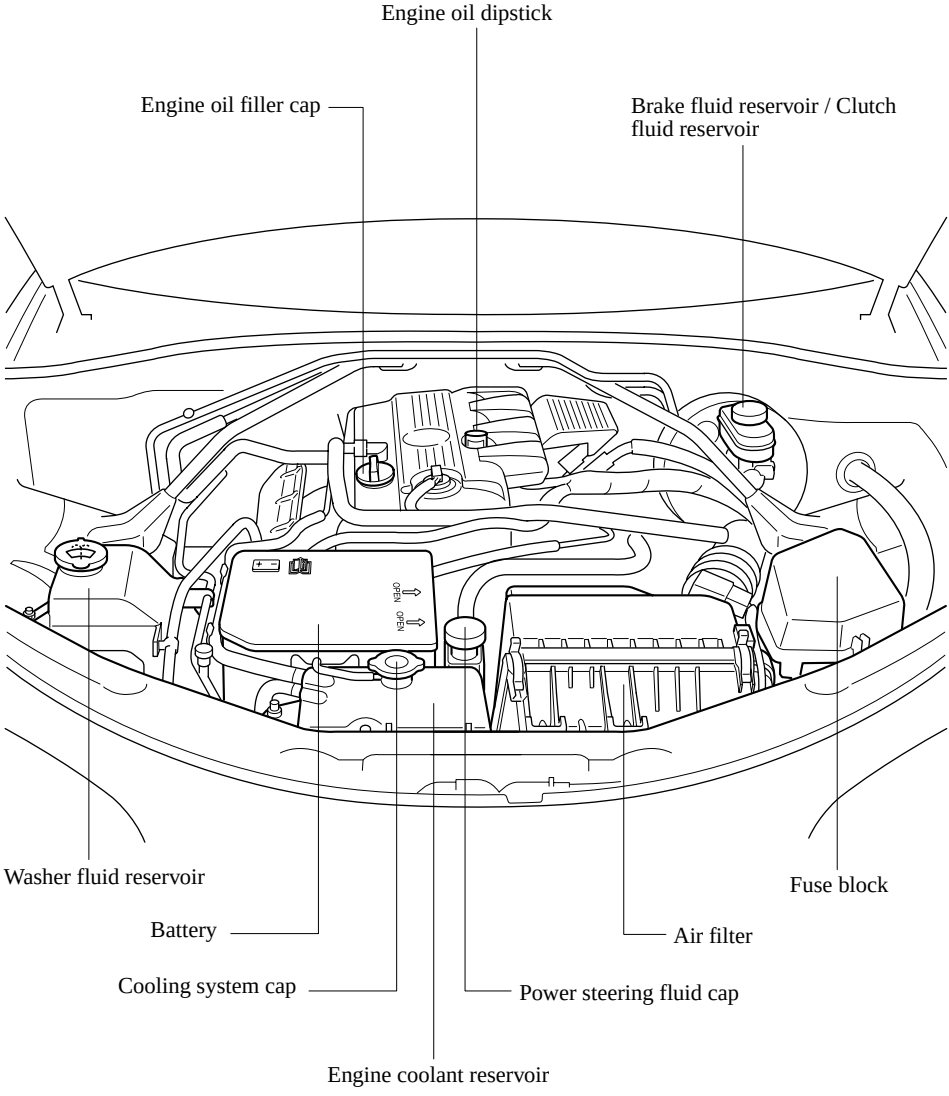

Engine Oil

NOTE
Changing the engine oil should be done by an Authorized Mazda Dealer.

▼Recommended Oil

Use SAE 0W-20 engine oil.
Oil container labels provide important information.
A chief contribution this type of oil makes to fuel economy is reducing the amount of fuel necessary to overcome engine friction.
Mazda recommends Mazda Genuine Parts. For optimal engine performance, there are certain types of engine oils and filters suitable for your vehicle. Please consult an Authorized Mazda Dealer.

U.S.A. and CANADA

(ILSAC)

Only use oils “Certified For Gasoline Engines” by the American Petroleum Institute (API). An oil with this trademark symbol conforms to the current engine and emission system protection standards and fuel economy requirements of the International Lubricant Standardization and Approval Committee (ILSAC), comprised of U.S. and Japanese automobile manufacturers.

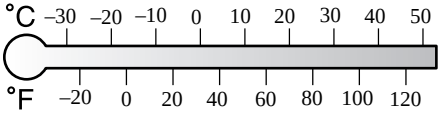

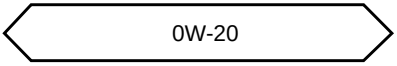

Use SAE 5W-20 engine oil.
Oil container labels provide important information.
A chief contribution this type of oil makes to fuel economy is reducing the amount of fuel necessary to overcome engine friction.
Mazda recommends Mazda Genuine Parts and Castrol (Mexico). For optimal engine performance, there are certain types of engine oils and filters suitable for your vehicle. Please consult an Authorized Mazda Dealer.

Except U.S.A. and CANADA

(ILSAC)

Mexico
Use SAE 5W-20 engine oil. If SAE 5W-20 engine oil is not available in your market, use SAE 5W-30 engine oil.

The quality designation SM, or ILSAC must be on the label.

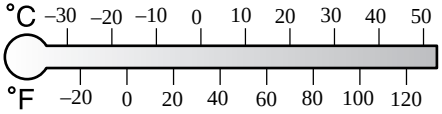

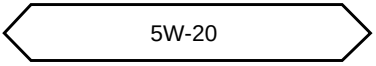

▼Inspecting Engine Oil Level

1. Be sure the vehicle is on a level surface.
2. Warm up the engine to normal operating temperature.
3. Turn it off and wait at least 5 minutes for the oil to return to the oil pan.
4. Pull out the dipstick, wipe it clean, and reinsert it fully.

Type A

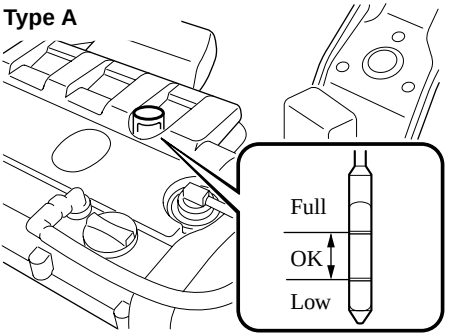

Type B

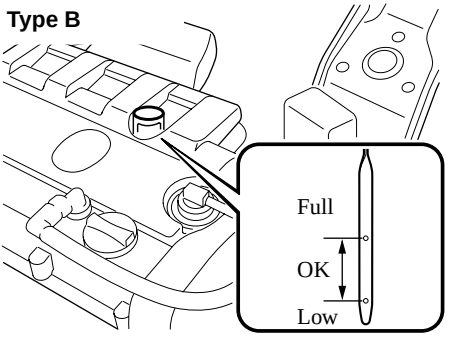

5. Pull it out again and examine the level. The level is normal if it is between Low and Full.
   If it is near or below Low, add enough oil to bring the level to Full.

⚠ CAUTION

Do not add engine oil over Full. This may cause engine damage.

6. Make sure the O-ring on the dipstick is positioned properly before reinserting the dipstick.

The distance between Low and Full on the dipstick represents the following:

Oil capacity	
L (US qt, Imp qt)	0.75 (0.79, 0.66)

Engine Coolant

▼Inspecting Coolant Level

⚠ WARNING

Do not use a match or live flame in the engine compartment. DO NOT ADD COOLANT WHEN THE ENGINE IS HOT:

A hot engine is dangerous. If the engine has been running, parts of the engine compartment can become very hot. You could be burned. Carefully inspect the engine coolant in the coolant reservoir, but do not open it.

Turn off the ignition switch and make sure the fan is not running before attempting to work near the cooling fan:

Working near the cooling fan when it is running is dangerous. The fan could continue running indefinitely even if the engine has stopped and the engine compartment temperature is high. You could be hit by the fan and seriously injured.

✓ Do not remove the cooling system cap when the engine and radiator are hot:

When the engine and radiator are hot, scalding coolant and steam may shoot out under pressure and cause serious injury.

NOTE

Changing the coolant should be done by an Authorized Mazda Dealer.

Inspect the antifreeze protection and coolant level in the coolant reservoir at least once a year at the beginning of the winter season and before traveling where temperatures may drop below freezing.

Inspect the condition and connections of all cooling system and heater hoses. Replace any that are swollen or deteriorated.

The coolant should be at full in the radiator and between the F and L marks on the coolant reservoir when the engine is cool.

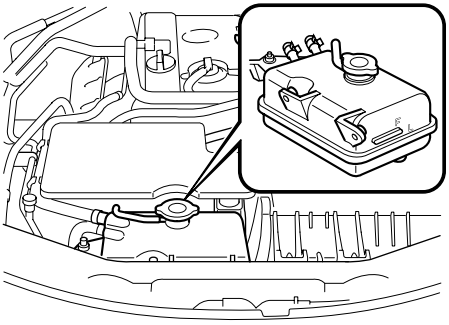

If it's at or near L, add enough coolant to the coolant reservoir to provide freezing and corrosion protection and to bring the level to F.

CAUTION

- *Radiator coolant will damage paint.*
  Rinse it off quickly if spilled.
- *Use only soft (demineralized) water in the coolant mixture.*
  Water that contains minerals will cut down on the coolant's effectiveness.
- *Don't add only water. Always add a proper coolant mixture.*
- *The engine has aluminum parts and must be protected by an ethylene-glycol-based coolant to prevent corrosion and freezing.*
- *DO NOT USE coolants Containing Alcohol, methanol, Borate or Silicate.*
  These coolants could damage the cooling system.
- *DO NOT MIX alcohol or methanol with the coolant. This could damage the cooling system.*
- *Don't use a solution that contains more than 60% antifreeze.*
  This would reduce effectiveness.

NOTE

If the "FL22" mark is shown on or near the cooling system cap, it is recommended to use Mazda Genuine FL22 engine coolant (page 8-3).

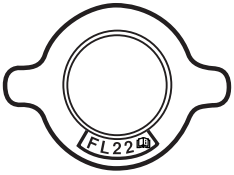

If the coolant reservoir is empty or new coolant is required frequently, consult an Authorized Mazda Dealer.

Brake/Clutch Fluid

▼Inspecting Brake/Clutch Fluid Level

The brakes and clutch draw fluid from the same reservoir.
Inspect the fluid level in the reservoir regularly. It should be kept at MAX.
The level normally drops with accumulated distance, a condition associated with wear of brake and clutch linings. If it is excessively low, have the brake/clutch system inspected by an Authorized Mazda Dealer.

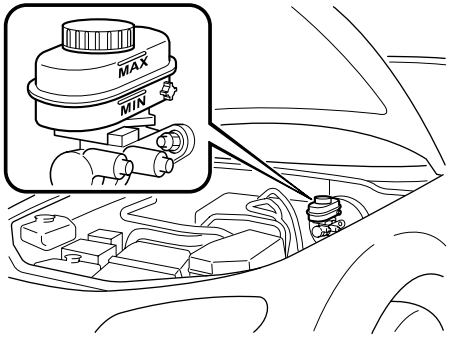

▼Adding Brake/Clutch Fluid

⚠ WARNING

Be careful not to spill brake fluid on yourself or on the engine:
Spilled brake fluid is dangerous. If it gets in your eyes, they could be seriously injured. If this happens, immediately flush your eyes with water and get medical attention. Brake fluid spilled on a hot engine could cause a fire.

If the brake/clutch fluid level is low, have the brakes and clutch inspected:
Low brake/clutch fluid levels are dangerous. Low levels could signal brake lining wear or a brake system leak. Your brakes could fail and cause an accident.

If the fluid level is low, add fluid until it reaches MAX.
Before adding fluid, thoroughly clean the area around the cap.

⚠ CAUTION

- *Brake and clutch fluid will damage painted surfaces. If brake or clutch fluid does get on a painted surface, wash it off with water immediately.*
- *Using nonspecified brake and clutch fluids (page 10-4) will damage the systems. Mixing different fluids will also damage them.*
  If the brake/clutch system frequently requires new fluid, consult an Authorized Mazda Dealer.

Power Steering Fluid

▼Inspecting Power Steering Fluid Level

⚠ CAUTION

To avoid damage to the power steering pump, don't operate the vehicle for long periods when the power steering fluid level is low.

NOTE

Use specified power steering fluid (page 10-4).

Inspect the fluid level in the reservoir at each engine oil change with the engine off and cold. Add fluid if necessary; it does not require periodic changing.

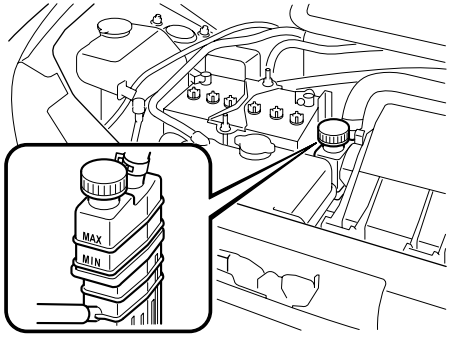

The level must be kept between MIN and MAX.

Visually examine the lines and hoses for leaks and damage.

If new fluid is required frequently, consult an Authorized Mazda Dealer.

Washer Fluid

▼Inspecting Washer Fluid Level

⚠ WARNING

Use only windshield washer fluid or plain water in the reservoir:

Using radiator antifreeze as washer fluid is dangerous. If sprayed on the windshield, it will dirty the windshield, affect your visibility, and could result in an accident.

Using Washer Fluid Without Anti-freeze Protection in Cold Weather:

Operating your vehicle in temperatures below 4 degrees C (40 degrees F) using washer fluid without anti-freeze protection is dangerous as it could cause impaired windshield vision and result in an accident. In cold weather, always use washer fluid with anti-freeze protection.

NOTE

State or local regulations may restrict the use of volatile organic compounds (VOCs), which are commonly used as anti-freeze agents in washer fluid. A washer fluid with limited VOC content should be used only if it provides adequate freeze resistance for all regions and climates in which the vehicle will be operated.

Inspect fluid level in the washer fluid reservoir; add fluid if necessary.

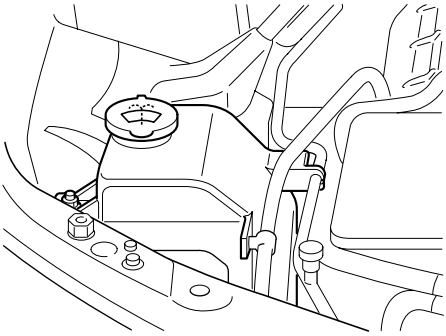

Use plain water if washer fluid is unavailable.
But use only washer fluid in cold weather to prevent it from freezing.

Body Lubrication

All moving points of the body, such as door and hood hinges and locks, should be lubricated each time the engine oil is changed. Use a nonfreezing lubricant on locks during cold weather.

Make sure the hood's secondary latch keeps the hood from opening when the primary latch is released.

Wiper Blades

CAUTION

- *Hot waxes applied by automatic car washers have been known to affect the wiper's ability to clean windows.*
- *To prevent damage to the wiper blades, don't use gasoline, kerosene, paint thinner, or other solvents on or near them.*

Contamination of either the windshield or the blades with foreign matter can reduce wiper effectiveness. Common sources are insects, tree sap, and hot wax treatments used by some commercial car washes.

If the blades are not wiping properly, clean the window and blades with a good cleaner or mild detergent; then rinse thoroughly with clean water. Repeat if necessary.

▼Replacing Windshield Wiper Blades

When the wipers no longer clean well, the blades are probably worn or cracked. Replace them.

CAUTION

To prevent damage to the wiper arms and other components, don't try to sweep the wiper arm by hand.

1. Raise the wiper arm and turn the blade assembly to expose the plastic locking clip.
   Compress the clip and slide the assembly downward; then lift it off the arm.

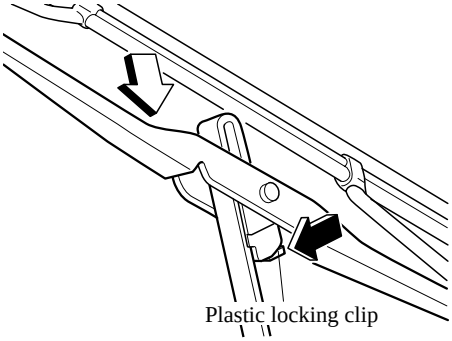

CAUTION

To prevent damage to the windshield let the wiper arm down easily, don't let it slap down on the windshield.

2. Hold the end of the rubber and pull until the tabs are free of the metal support.

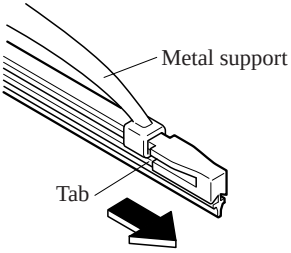

3. Remove the metal stiffeners from each blade rubber and install them in the new blade.

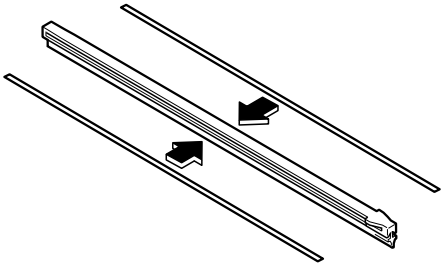

CAUTION

- *Don't bend or discard the stiffeners. You need to use them again.*
- *If the metal stiffeners are switched, the blade's wiping efficiency could be reduced. So don't use the driver's side metal stiffeners on the passenger's side, or vice versa.*
- *Be sure to reinstall the metal stiffeners in the new blade rubber so that the curve is the same as it was in the old blade rubber.*

4. Carefully insert the new blade rubber. Then install the blade assembly in the reverse order of removal.

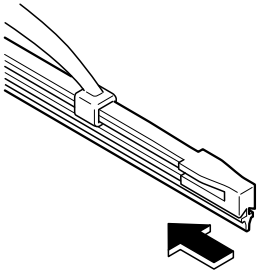

NOTE

Install the blade so that the tabs are toward the bottom of the wiper arm.

Battery

WARNING

Wash hands after handling the battery and related accessories:

Battery posts, terminals and related accessories contain lead and lead compounds, chemicals known to the State of California to cause cancer and reproductive harm.

Read the following precautions carefully before using the battery or inspecting to ensure safe and correct handling:

Always wear eye protection when working near the battery:

Working without eye protection is dangerous. Battery fluid contains SULFURIC ACID which could cause blindness if splashed into your eyes. Also, hydrogen gas produced during normal battery operation, could ignite and cause the battery to explode.

Wear eye protection and protective gloves to prevent contact with battery fluid:

Spilled battery fluid is dangerous.
Battery fluid contains SULFURIC ACID which could cause serious injuries if it gets in eyes, or on the skin or clothing. If this happens, immediately flush your eyes with water for 15 minutes or wash your skin thoroughly and get medical attention.

Always keep batteries out of the reach of children:

Allowing children to play near batteries is dangerous. Battery fluid could cause serious injuries if it gets in the eyes or on the skin.

Keep flames and sparks away from open battery cells and do not allow metal tools to contact the positive (+) or negative (−) terminal of the battery when working near a battery. Do not allow the positive (+) terminal to contact the vehicle body:

Flames and sparks near open battery cells are dangerous. Hydrogen gas, produced during normal battery operation, could ignite and cause the battery to explode. An exploding battery can cause serious burns and injuries. Keep all flames including cigarettes and sparks away from open battery cells.

Keep all flames, including cigarettes, and sparks away from open battery cells: *Flames and sparks near open battery cells are dangerous. Hydrogen gas, produced during normal battery operation, could ignite and cause the battery to explode. An exploding battery can cause serious burns and injuries.*

NOTE

- *Remove the rubber hose first, and then battery cover before performing battery maintenance.*

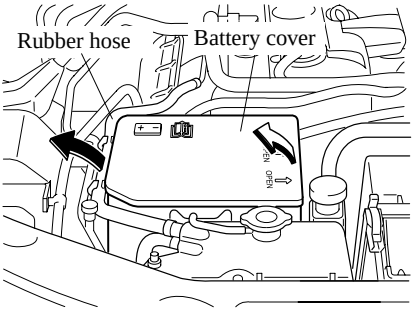

- *Before installing the battery cover, make sure both of the cables connecting the negative battery terminal (right side of battery) are connected with the cables routed toward the right and back of the battery as shown in the figure.*

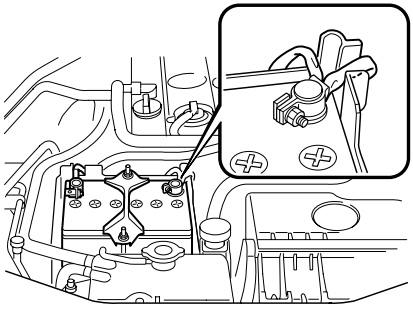

▼Battery Maintenance

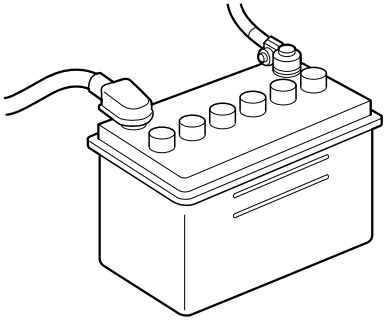

To get the best service from a battery:

- Keep it securely mounted.
- Keep the top clean and dry.
- Keep terminals and connections clean, tight, and coated with petroleum jelly or terminal grease.
- Rinse off spilled electrolyte immediately with a solution of water and baking soda.
- If the vehicle will not be used for an extended time, disconnect the battery cables.

Tires

For reasons of proper performance, safety, and better fuel economy, always maintain recommended tire inflation pressures and stay within the recommended load limits and weight distribution.

WARNING

Using Different Tire Types:

Driving your vehicle with different types of tires is dangerous. It could cause poor handling and poor braking; leading to loss of control.

Using Wrong-Sized Tires:

Using any other tire size than what is specified for your Mazda (page 10-7) is dangerous. It could seriously affect ride, handling, ground clearance, tire clearance, and speedometer calibration. This could cause you to have an accident. Use only tires that are the correct size specified for your Mazda.

▼Tire Inflation Pressure

WARNING

Always inflate the tires to the correct pressure:

Overinflation or underinflation of tires is dangerous. Adverse handling or unexpected tire failure could result in a serious accident.
Refer to specification charts on page 10-7.

Use only a Mazda-genuine tire valve cap:

Use of a non-genuine part is dangerous as the correct tire air pressure cannot be maintained if the tire valve becomes damaged. If the vehicle is driven under this condition, the tire air pressure will decrease which could result in a serious accident. Do not use any part for the tire valve cap that is not a Mazda-genuine part.

The Tire Pressure Monitoring System* does not alleviate the need to check the tire condition every day, including whether the tires all look inflated properly. Inspect all tire pressure monthly when the tires are cold. Maintain recommended pressures for the best ride, handling, and minimum tire wear.
When checking the tire pressures, use of a digital tire pressure gauge is recommended.

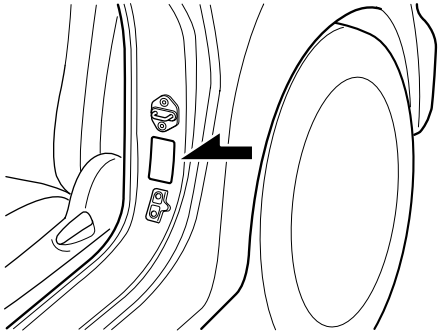

Refer to the specification charts (page 10-7).

NOTE

- *Always check tire pressure when tires are cold.*
- *Warm tires normally exceed recommended pressures. Don't release air from warm tires to adjust the pressure.*
- *Underinflation can cause reduced fuel economy, uneven and accelerated tire wear, and poor sealing of the tire bead, which will deform the wheel and cause separation of tire from rim.*
- *Overinflation can produce a harsh ride, uneven and accelerated tire wear, and a greater possibility of damage from road hazards.*
  Keep your tire pressure at the correct levels. If one frequently needs inflating, have it inspected.

▼Tire Rotation

WARNING

Rotate tires periodically:
Irregular tire wear is dangerous. To equalize tread wear for maintaining good performance in handling and braking, rotate the tires according to the scheduled maintenance charts. Refer to Scheduled Maintenance on page 8-3.

During rotation, inspect them for correct balance.

NOTE
Because your vehicle is not equipped with a spare tire, you cannot do a tire rotation safely with the jack that comes with your vehicle. Have an Authorized Mazda Dealer perform tire rotation.

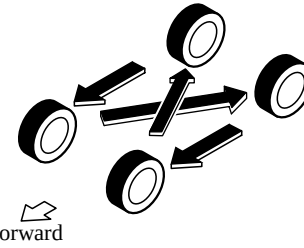

Do not include (TEMPORARY USE ONLY) spare tire in rotation.

Also, inspect them for uneven wear and damage. Abnormal wear is usually caused by one or a combination of the following:

- Incorrect tire pressure
- Improper wheel alignment
- Out-of-balance wheel
- Severe braking

*Some models.

After rotation, inflate all tire pressures to specification (page 10-7) and inspect the lug nuts for tightness.

⚠ CAUTION

Rotate unidirectional tires and radial tires that have an asymmetrical tread pattern or studs only from front to rear, not from side to side. Tire performance will be reduced if rotated from side to side.

⚠ CAUTION

Limited-Slip Differential system; don't use the following:
- *Tires not of the designated size*
- *Tires of different sizes or types at the same time*
- *Tires not sufficiently inflated*

If these instructions aren't followed, the rotation of the left and right wheels will be different and will thus apply a constant load on the limited-slip differential.
This will cause a malfunction.

▼Replacing a Tire

⚠ WARNING

Always use tires that are in good condition:
Driving with worn tires is dangerous. Reduced braking, steering, and traction could result in an accident.

Replace all four tires at the same time:
Replacing just one tire is dangerous. It could cause poor handling and poor braking resulting in loss of vehicle control. Mazda strongly recommends that you replace all four tires at the same time.

⚠ CAUTION

(With Tire Pressure Monitoring System)
When replacing/repairing the tires or wheels or both, have the work done by an Authorized Mazda Dealer, or the tire pressure sensors may be damaged.

NOTE
(With Tire Pressure Monitoring System)
- *When tires with steel wire reinforcement in the sidewalls are used, the system may not function correctly even with a genuine wheel.*
  Refer to System Error Activation on page 5-34.
- *Be sure to install the tire pressure sensors whenever tires or wheels are replaced.*
  Refer to Tires and Wheels on page 5-35.

If a tire wears evenly, a wear indicator will appear as a solid band across the tread.
Replace the tire when this happens.

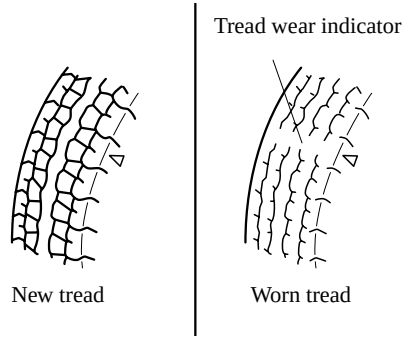

You should replace the tire before the band crosses the entire tread.

NOTE
Tires degrade over time, even when they are not being used on the road. It is recommended that tires generally be replaced when they are 6 years or older. Heat caused by hot climates or frequent high loading conditions can accelerate the aging process. The period in which the tire was manufactured (both week and year) is indicated by a 4-digit number. Refer to The tire labeling on page 9-23.

▼Replacing a Wheel

⚠ WARNING

Always use wheels of the correct size on your vehicle:
Using a wrong-sized wheel is dangerous. Braking and handling could be affected, leading to loss of control and an accident.

⚠ CAUTION

- *A wrong-sized wheel may adversely affect:*
  - *Tire fit*
  - *Wheel and bearing life*
  - *Ground clearance*
  - *Snow-chain clearance*
  - *Speedometer calibration*
  - *Headlight aim*
  - *Bumper height*
  - *Tire Pressure Monitoring System*
  - *Limited-Slip Differential System*
- ***(With Tire Pressure Monitoring System)***
  - *When replacing/repairing the tires or wheels or both, have the work done by an Authorized Mazda Dealer, or the tire pressure sensors may be damaged.*
  - *The wheels equipped on your Mazda are specially designed for installation of the tire pressure sensors. Do not use non-genuine wheels, otherwise it may not be possible to install the tire pressure sensors.*

NOTE
Be sure to install the tire pressure sensors whenever tires or wheels are replaced. Refer to Tires and Wheels on page 5-35.

When replacing a wheel, make sure the new one is the same as the original factory wheel in diameter, rim width, and offset (inset/outset).

Proper tire balancing provides the best riding comfort and helps reduce tread wear. Out-of-balance tires can cause vibration and uneven wear, such as cupping and flat spots.

MEMO

Light Bulbs

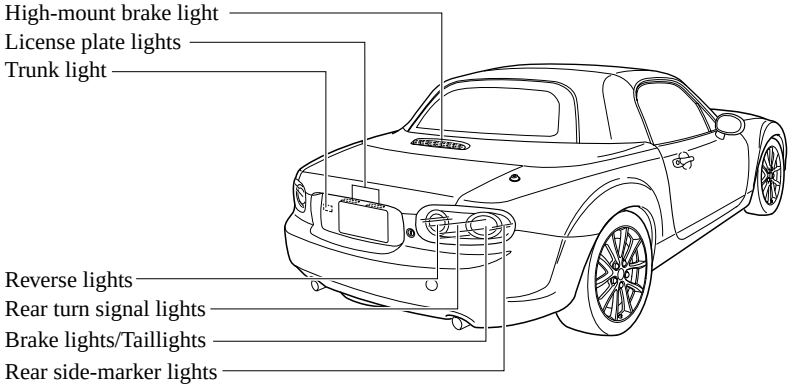

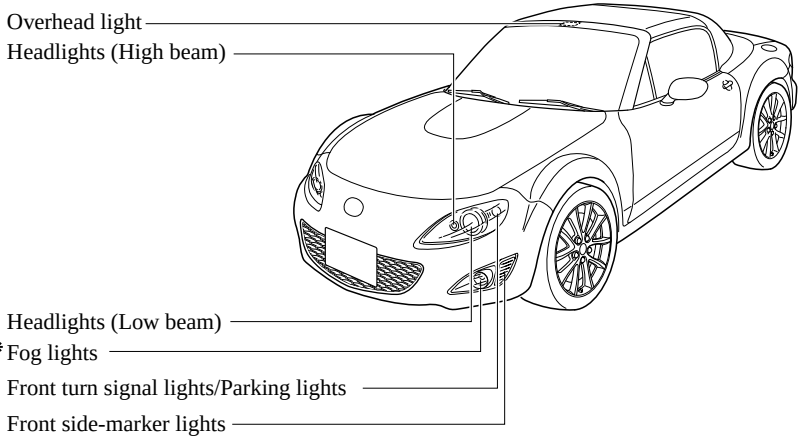

* Some models.

WARNING

Do not replace the xenon fusion bulbs yourself:

Replacing the xenon fusion bulbs yourself is dangerous. Because the xenon fusion bulbs require high voltage, you could receive an electric shock if the bulbs are handled incorrectly. Consult an Authorized Mazda Dealer when the replacement is necessary.

Never touch the glass portion of a halogen bulb with your bare hands and always wear eye protection when handling or working around the bulbs:

When a halogen bulb breaks, it is dangerous. These bulbs contain pressurized gas. If one is broken, it will explode and serious injuries could be caused by the flying glass. If the glass portion is touched with bare hands, body oil could cause the bulb to overheat and explode when lit.

Always keep halogen bulbs out of the reach of children:

Playing with a halogen bulb is dangerous. Serious injuries could be caused by dropping a halogen bulb or breaking it some other way.

▼Replacing Exterior Light Bulbs

NOTE

- *To replace the bulb, contact an Authorized Mazda Dealer.*
- *If the halogen bulb is accidentally touched, it should be cleaned with rubbing alcohol before being used.*
- *Use the protective cover and carton for the replacement bulb to dispose of the old bulb promptly and out of the reach of children.*

Headlight bulbs

High-beam bulbs

1. Make sure the ignition is switched off, and the headlight switch is off.
2. Lift the hood.
3. Disconnect the electrical connector from the bulb by pressing the tab on the connector with your finger and pulling the connector downward.

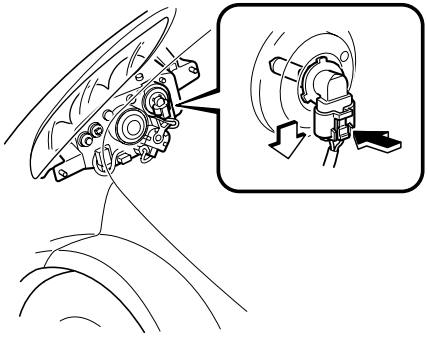

4. Turn the socket and bulb assembly to remove it. Carefully remove the bulb from its socket in the reflector by gently pulling it straight backward out of the socket.

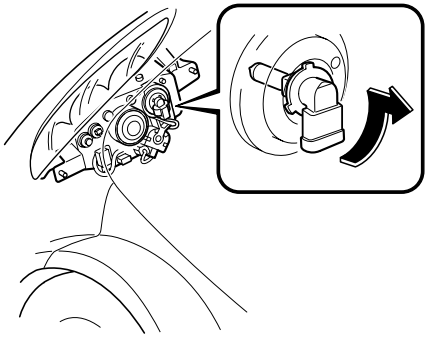

5. Install the new bulb in the reverse order of the removal procedure.

Low-beam bulbs

(Xenon fusion bulbs)
You cannot replace the low beam bulbs by yourself. The bulbs must be replaced at an Authorized Mazda Dealer.
(Halogen bulbs)

1. If you are changing the right bulb, start the engine, turn the steering wheel all the way to the right, and turn off engine. If you are changing the left bulb, turn the steering wheel to the left.
2. Make sure the headlight switch is off.
3. Turn the center section of the plastic retainer counterclockwise and remove the retainers and partially peel back the mudguard.

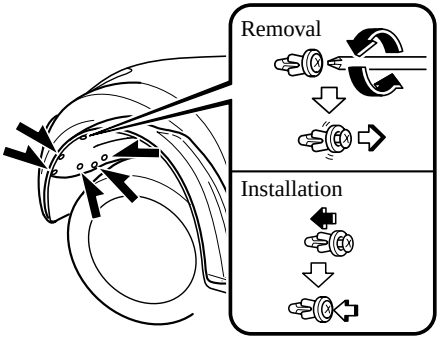

4. Disconnect the electrical connector from the bulb by pressing the tab on the connector with your finger and pulling the connector rear.

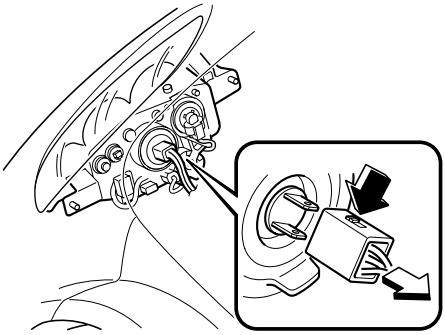

5. Pull off the sealing cover.

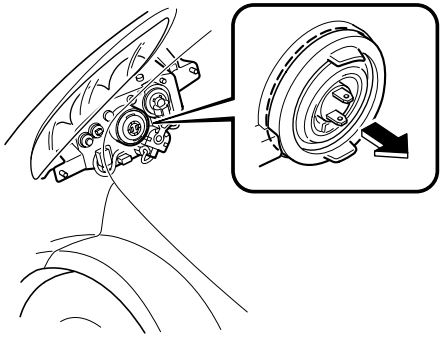

6. Unhook the bulb retaining spring.

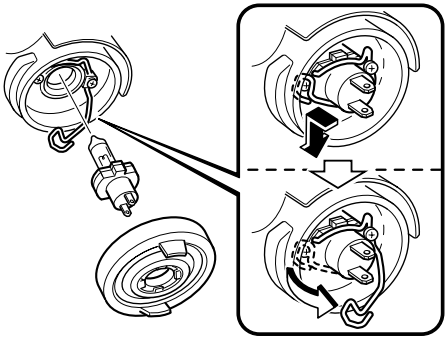

7. Remove the adapter.

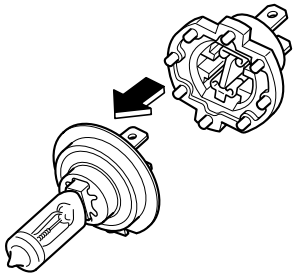

8. Install the new bulb in the reverse order of the removal procedure.

Fog light bulbs*

1. Make sure the ignition is switched off, and the headlight switch is off.
2. Turn the screws and the center section of the plastic retainers counterclockwise and remove them, then partially peel back the mudguard.

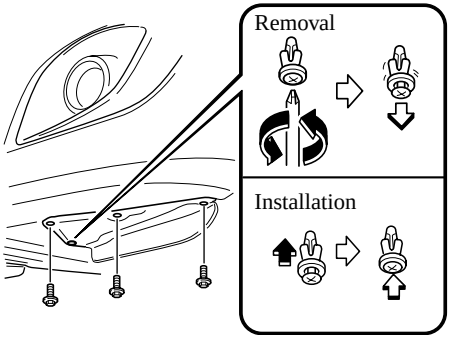

3. Disconnect the electrical connector from the bulb by pressing the tab on the connector with your finger and pulling the connector downward.

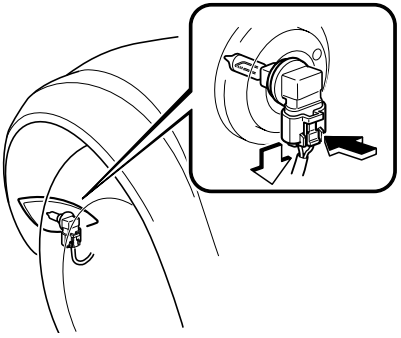

4. Turn the socket and bulb assembly to remove it. Carefully remove the bulb from its socket in the reflector by gently pulling it straight backward out of the socket.

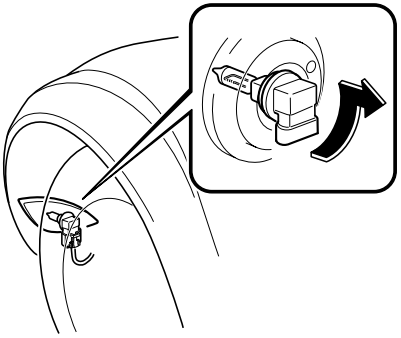

5. Install the new bulb in the reverse order of the removal procedure.

Front side-marker lights

1. Make sure the ignition is switched off, and the headlight switch is off.

*Some models.

2. Turn the screws and the center section of the plastic retainers counterclockwise and remove them, then partially peel back the mudguard.

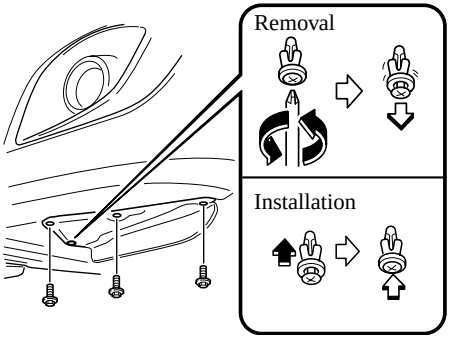

3. Disconnect the electrical connector from the bulb by pressing the tab on the connector with your finger and pulling the connector downward.

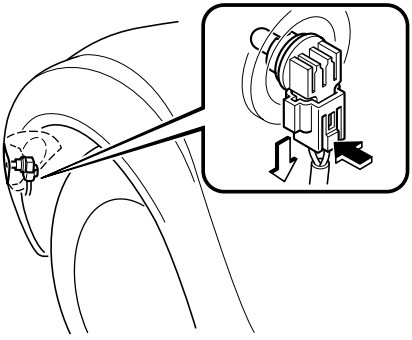

4. Turn the socket and bulb assembly to remove it. Carefully remove the bulb from its socket in the reflector by gently pulling it straight backward out of the socket.

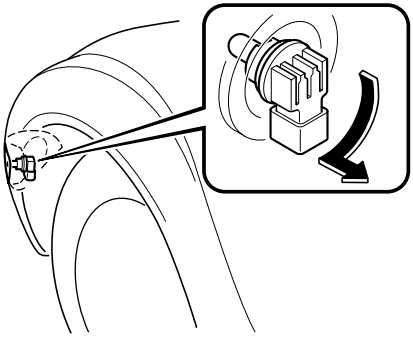

5. Install the new bulb in the reverse order of the removal procedure.

NOTE

(Replacing front-passenger side lamp bulb)

Turn the socket and bulb assembly screw counterclockwise.

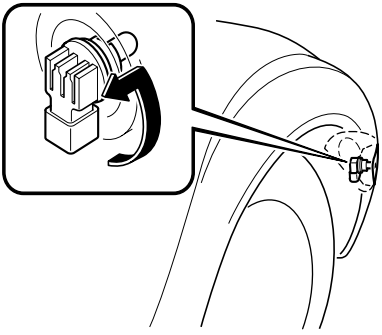

6. Install the new bulb in the reverse order of removal.

Front turn signal lights/Parking lights

1. If you are changing the right bulb, start the engine, turn the steering wheel all the way to the right, and turn off engine. If you are changing the left bulb, turn the steering wheel to the left.
2. Make sure the turn signal switch is off.
3. Turn the center section of the plastic retainer counterclockwise and remove the retainers and partially peel back the mudguard.

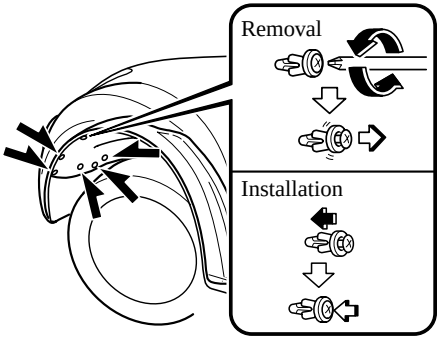

4. Disconnect the bulb from the socket.

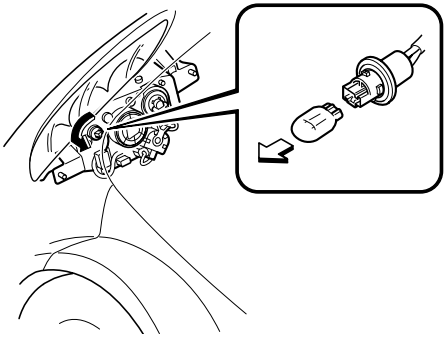

5. Install the new bulb in the reverse order of the removal procedure.

Rear turn signal lights, Reverse lights, Brake lights/Taillights, Rear side marker lights

Rear side marker lights

Due to the complexity and difficulty of the procedure, the LED bulbs should be replaced by an Authorized Mazda Dealer.

Rear turn signal lights, Reverse lights, Brake lights/Taillights

1. Make sure the ignition is switched off and the applicable light switch is off.
2. Lift the trunk.
3. Pull the center section of the plastic retainers and remove them, then remove the trunk end trim.

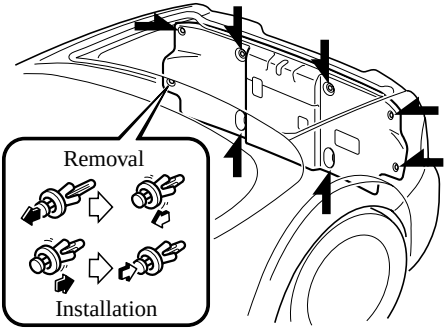

4. Remove the trunk light connector.

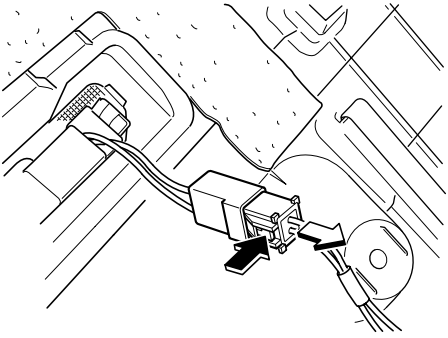

5. Remove the trunk lid release lock-out button connector.

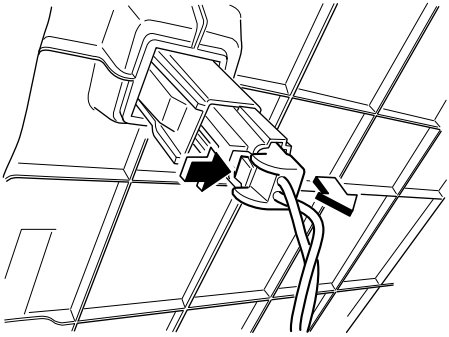

6. On the side the bulb is to be replaced, pull the center section of the plastic retainers and remove them, then remove the trunk side trim.

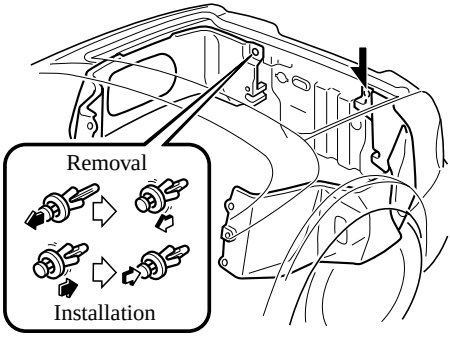

7. Disconnect the bulb from the socket.

Rear turn signal lights

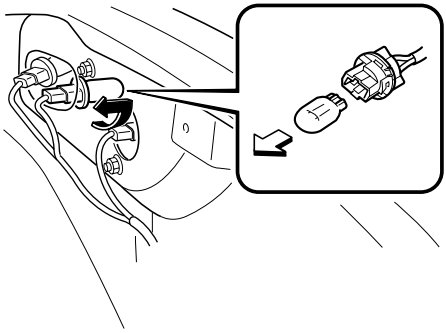

Reverse lights

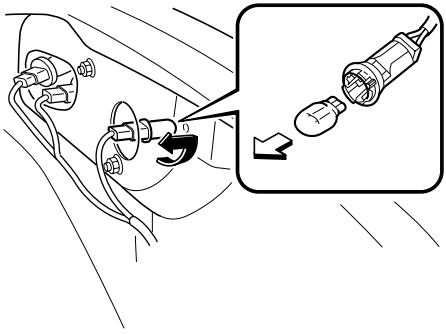

Brake lights/Taillights

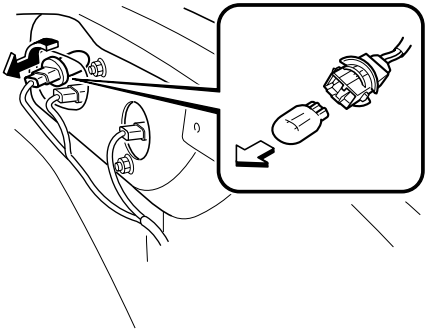

8. Install the new bulb in the reverse order of the removal procedure.

High-mount brake light

Due to the complexity and difficulty of the procedure, the LED bulbs should be replaced by an Authorized Mazda Dealer.

License plate lights

1. Make sure the ignition is switched off, and the headlight switch is off.
2. Lift the trunk.
3. Slide the light to the left side of the vehicle and remove it.

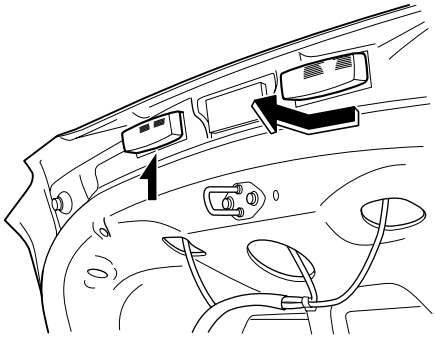

4. Disconnect the bulb from the socket.

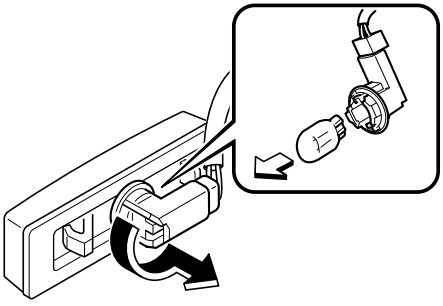

5. Install the new bulb in the reverse order of the removal procedure.

▼Replacing Interior Light Bulbs

Overhead light

1. Wrap a flathead screwdriver with a soft cloth to prevent damage to the trim and gently insert it in the overhead light as shown in the figure, and then remove the cover.
2. Disconnect the bulb by pulling it out.

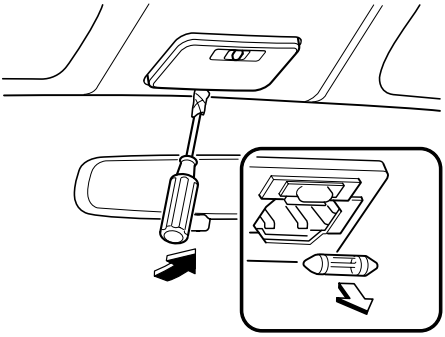

3. Install the new bulb in the reverse order of removal.

Trunk light

1. Wrap a flathead screwdriver with a soft cloth to prevent damage to the trim and gently insert it in the luggage compartment light as shown in the figure, and then remove the luggage compartment light unit.
2. Disconnect the bulb by pulling it out.

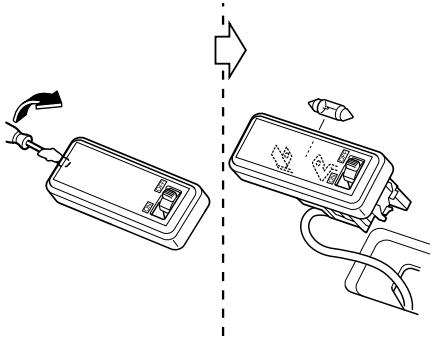

3. Install the new bulb in the reverse order of removal.

Fuses

Your vehicle's electrical system is protected by fuses.

If any lights, accessories, or controls don't work, inspect the appropriate circuit protector. If a fuse has blown, the inside element will be melted.

If the same fuse blows again, avoid using that system and consult an Authorized Mazda Dealer as soon as possible.

▼Fuse Replacement

Replacing the fuses on the vehicle's left side

If the electrical system does not work, first inspect the fuses on the vehicle's left side.

1. Turn off the ignition switch and other switches.
2. Remove the cover.

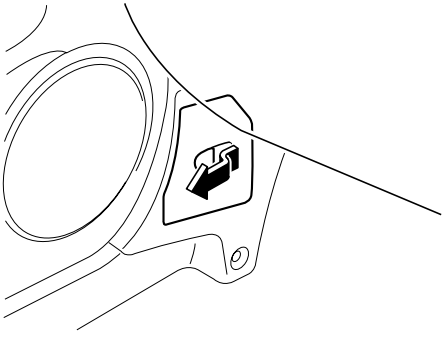

3. Pull the fuse straight out with the fuse puller provided on the inside of the engine compartment fuse block cover.

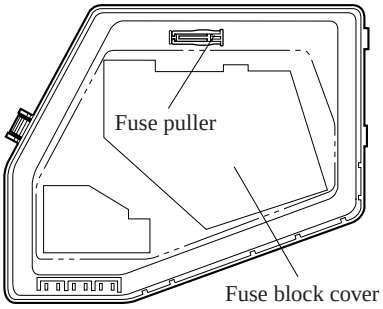

4. Inspect the fuse and replace it if it's blown.

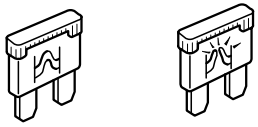

5. Insert a new fuse of the same amperage rating, and make sure it fits tightly. If it does not fit tightly, have an expert install it. We recommend an Authorized Mazda Dealer.
   If you have no spare fuses, borrow one of the same rating from a circuit not essential to vehicle operation, such as the MIRROR or CIGAR circuit.

⚠ CAUTION

Always replace a fuse with one of the same rating. Otherwise you may damage the electric system.

Replacing the fuses under the hood

If the headlights or other electrical components do not work and the fuses in the cabin are normal, inspect the fuse block under the hood. If a fuse is blown, it must be replaced. Follow these steps:

1. Turn off the ignition switch and all other switches.
2. Remove the fuse block cover.

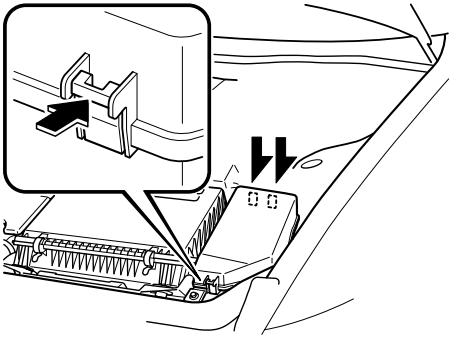

3. If any fuse but the MAIN fuse is blown, replace it with a new one **of the same amperage rating**.

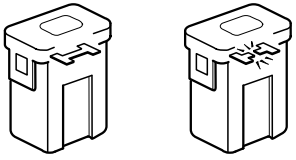

WARNING

Do not replace the main fuse by yourself. Have an Authorized Mazda Dealer perform the replacement:

Replacing the fuse by yourself is dangerous because the MAIN fuse is a high current fuse. Incorrect replacement could cause an electrical shock or a short circuit resulting in a fire.

▼Fuse Panel Description

Fuse block (Engine compartment)

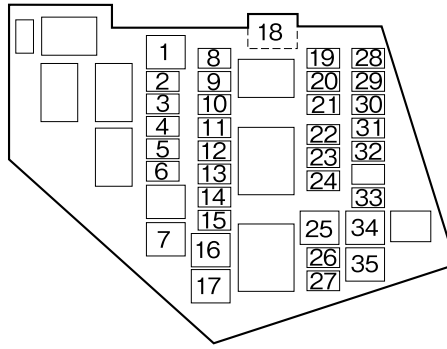

DESCRIPTION		FUSE RATING	PROTECTED COMPONENT
1	FAN	30 A	Cooling fan
2	FAN	7.5 A	Cooling fan
3	DEFOG	20 A	Rear window defroster
4	H/CLEAN		
5	ROOM	15 A	Overhead lights, Luggage compartment light, For protection of various circuits, Trunk opener
6	IG KEY2	15 A	For protection of various circuits
7	HEATER	40 A	Air conditioner *
8	ABS	30 A	ABS
9	FOG	15 A	Front fog lights *
10	R.FOG		
11	RHT L	30 A	Power retractable hardtop (LH) *
12	RHT R	30 A	Power retractable hardtop (RH) *
13	MAG	7.5 A	Air conditioner *
14	ST	20 A	Starter
15	TAIL	15 A	Taillights, Parking lights, License plate lights, Illumination
16	ABS	40 A	ABS

*Some models.

DESCRIPTION		FUSE RATING	PROTECTED COMPONENT
17	BTN	30 A	For protection of various circuits
18	MAIN	120 A	For protection of all circuits
19	EGI INJ	10 A	Injector
20	EGI COMP1	10 A	Engine control system
21	EGI COMP2	10 A	Engine control system
22	HEAD LOW L	15 A	Headlight low beam (LH)
23	HEAD LOW R	15 A	Headlight low beam (RH)
24	HEAD	15 A	Headlight high beams
25	P.WIND	20 A	Power windows
26	ENGINE	15 A	Engine control system
27	WIPER	20 A	Windshield wipers and washer
28	DRL	15 A	DRL *
29	HORN	15 A	Horn
30	STOP	10 A	Brake lights
31	ETV	10 A	Electric throttle valve
32	FUEL PUMP	15 A	Fuel Pump
33	HAZARD	10 A	Turn signals, Hazard warning flashers
34	P.WIND2	20 A	Power windows *
35	IG KEY1	40 A	For protection of various circuits

 *Some models.

Fuse block (Driver's side)

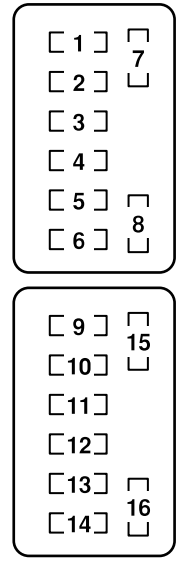

DESCRIPTION		FUSE RATING	PROTECTED COMPONENT
1	ACC	7.5 A	Audio system, Power control mirror
2	AUX PWR	15 A	Accessory Socket
3	METER	15 A	Instrument cluster
4	SEAT WARM	20 A	Seat warmer *
5	ILLUMI	7.5 A	Illumination
6	A/C	7.5 A	Air conditioner *
7	ENGINE	7.5 A	Engine control system, For protection of various circuits
8			
9	M.DEF		
10	AUDIO	20 A	Audio system *
11	D.LOCK	20 A	Power door lock *
12	SILEN		
13			
14			
15			
16			

*Some models.

How to Minimize Environmental Paint Damage

The paintwork on your Mazda represents the latest technical developments in composition and methods of application.

Environmental hazards, however, can harm the paint's protective properties, if proper care is not taken.

Here are some examples of possible damage, with tips on how to prevent them.

▼Etching Caused by Acid Rain or Industrial Fallout

Occurrence

Industrial pollutants and vehicle emissions drift into the air and mix with rain or dew to form acids. These acids can settle on a vehicle's finish. As the water evaporates, the acid becomes concentrated and can damage the finish.
And the longer the acid remains on the surface, the greater the chance is for damage.

Prevention

It is necessary to wash and wax your vehicle to preserve its finish according to the instructions in this section. These steps should be taken immediately after you suspect that acid rain has settled on your vehicle's finish.

▼Damage Caused by Bird Dropping, Insects, or Tree Sap

Occurrence

Bird droppings contain acids. If these aren't removed they can eat away the clear and color base coat of the vehicle's paintwork.

When insects stick to the paint surface and decompose, corrosive compounds form. These can erode the clear and color base coat of the vehicle's paintwork if they are not removed.

Tree sap will harden and adhere permanently to the paint finish. If you scratch the sap off while it is hard, some vehicle paint could come off with it.

Prevention

It is necessary to have your Mazda washed and waxed to preserve its finish according to the instructions in this section. This should be done as soon as possible.

Bird droppings can be removed with a soft sponge and water. If you are traveling and these are not available, a moistened tissue may also take care of the problem. The cleaned area should be waxed according to the instructions in this section.
Insects and tree sap are best removed with a soft sponge and water or a commercially available chemical cleaner.

Another method is to cover the affected area with dampened newspaper for one to two hours. After removing the newspaper, rinse off the loosened debris with water.

▼Water Marks

Occurrence

Rain, fog, dew, and even tap water can contain harmful minerals such as salt and lime. If moisture containing these minerals settles on the vehicle and evaporates, the minerals will concentrate and harden to form white rings. The rings can damage your vehicle's finish.

Prevention

It is necessary to wash and wax your vehicle to preserve its finish according to the instructions in this section. These steps should be taken immediately after you find water marks on your vehicle's finish.

▼Paint Chipping

Occurrence

Paint chipping occurs when gravel thrown in the air by another vehicle's tires hits your vehicle.

How to avoid paint chipping

Keeping a safe distance between you and the vehicle ahead reduces the chances of having your paint chipped by flying gravel.

NOTE

- *The paint chipping zone varies with the speed of the vehicle. For example, when traveling at 90 km/h (56 mph), the paint chipping zone is 50 m (164 ft).*
- *In low temperatures a vehicle's finish hardens. This increases the chance of paint chipping.*
- *Chipped paint can lead to rust forming on your Mazda. Before this happens, repair the damage by using Mazda touch-up paint according to the instructions in this section. Failure to repair the affected area could lead to serious rusting and expensive repairs.*

Exterior Care

Follow **all** label and container directions when using a chemical cleaner or polish. Read all warnings and cautions.

▼Maintaining the Finish

Washing

To help protect the finish from rust and deterioration, wash your Mazda thoroughly and frequently, at least once a month, with lukewarm or cold water.

If the vehicle is washed improperly, the paint surface could be scratched. Here are some examples of how scratching could occur.

Scratches occur on the paint surface when:
- The vehicle is washed without first rinsing off dirt and other foreign matter.
- The vehicle is washed with a rough, dry, or dirty cloth.
- The vehicle is washed at a car wash that uses brushes that are dirty or too stiff.
- Cleansers or wax containing abrasives are used.

NOTE
- *Mazda is not responsible for scratches caused by automatic car washes or improper washing.*
- *Scratches are more noticeable on vehicles with darker paint finishes.*

To minimize scratches on the vehicle's paint finish:
- Rinse off any dirt or other foreign matter using lukewarm or cold water before washing.
- Use plenty of lukewarm or cold water and a soft cloth when washing the vehicle. Do not use a nylon cloth.
- Rub gently when washing or drying the vehicle.
- Take your vehicle only to a car wash that keeps its brushes well maintained.
- Do not use abrasive cleansers or wax that contain abrasives.

⚠ CAUTION

- ➢ *Do not use steel wool, abrasive cleaners, or strong detergents containing highly alkaline or caustic agents on chrome-plated or anodized aluminum parts. This may damage the protective coating; also, cleaners and detergents may discolor or deteriorate the paint.*
- ➢ *To prevent damaging the antenna, remove it before entering a car wash facility or passing beneath a low overhead clearance.*

Pay special attention to removing salt, dirt, mud, and other foreign material from the underside of the fenders, and make sure the drain holes in the lower edges of the doors and rocker panels are clean.

Insects, tar, tree sap, bird droppings, industrial fallout, and similar deposits can damage the finish if not removed immediately. When prompt washing with plain water is ineffective, use a mild soap made for use on vehicles.

Thoroughly rinse off all soap with lukewarm or cold water. Do not allow soap to dry on the finish.

After washing the vehicle, dry it with a clean chamois to prevent water spots from forming.

WARNING

Dry off brakes that have become wet by driving slowly, releasing the accelerator pedal and lightly applying the brakes several times until the brake performance returns to normal:

Driving with wet brakes is dangerous. Increased stopping distance or the vehicle pulling to one side when braking could result in a serious accident. Light braking will indicate whether the brakes have been affected.

When using a high water pressure car wash

High water temperature and high water pressure car washers are available depending on the type of car wash machine. If the car washer nozzle is put too close to the vehicle, the force of the spray could damage or deform the molding, affect the sealability of parts, and allow water to penetrate the interior. Keep a sufficient space (30 cm or more) between the nozzle and the vehicle. In addition, do not spend too much time spraying the same area of the vehicle, and be very careful when spraying between gaps in doors and around windows.

Waxing

Your vehicle needs to be waxed when water no longer beads on the finish.

Always wash and dry the vehicle before waxing it. In addition to the vehicle body, wax the metal trim to maintain its luster.

1. Use wax which contains no abrasives. Waxes containing abrasive will remove paint and could damage bright metal parts.
2. Use a good grade of natural wax for metallic, mica, and solid colors.
3. When waxing, coat evenly with the sponge supplied or a soft cloth.
4. Wipe off the wax with a soft cloth.

NOTE

A spot remover to remove oil, tar, and similar materials will usually also take off the wax. Rewax these areas even if the rest of the vehicle does not need it.

▼Repairing Damage to the Finish

Deep scratches or chips on the finish should be repaired promptly. Exposed metal quickly rusts and can lead to major repairs.

CAUTION

If your Mazda is damaged and needs metal parts repaired or replaced, make sure the body shop applies anti-corrosion materials to all parts, both repaired and new. This will prevent them from rusting.

▼Bright-Metal Maintenance

- Use tar remover to remove road tar and insects. Never do this with a knife or similar tool.
- To prevent corrosion on bright-metal surfaces, apply wax or chrome preservative and rub it to a high luster.

- During cold weather or in coastal areas, cover bright-metal parts with a coating of wax or preservative heavier than usual. It would also help to coat them with noncorrosive petroleum jelly or some other protective compound.

⚠ CAUTION

Don't use steel wool, abrasive cleaners, or strong detergents containing highly alkaline or caustic agents on chrome-plated or anodized aluminum parts. This may result in damage to the protective coating and cause discoloration or paint deterioration.

▼Underbody Maintenance

Road chemicals and salt used for ice and snow removal and solvents used for dust control may collect on the underbody. If not removed, they will speed up rusting and deterioration of such underbody parts as fuel lines, frame, floor pan, and exhaust system, even though these parts may be coated with anti-corrosive material.

Thoroughly flush the underbody and wheel housings with lukewarm or cold water at the end of each winter. Try also to do this every month.

Pay special attention to these areas because they easily hide mud and dirt. **It will do more harm than good to wet down the road grime without removing it.**

The lower edges of doors, rocker panels, and frame members have drain holes that should not be clogged. Water trapped there will cause rusting.

⚠ WARNING

Dry wet brakes by driving very slowly and applying the brakes lightly until brake performance is normal:

Driving with wet brakes is dangerous. Increased stopping distance or the vehicle pulling to one side when braking could result in a serious accident. Light braking will indicate whether the brakes have been affected.

▼Aluminum Wheel Maintenance

A protective coating is provided over the aluminum wheels. Special care is needed to protect this coating.

⚠ CAUTION

Do not use any detergent other than mild detergent. Before using any detergent, verify the ingredients. Otherwise, the product could discolor or stain the aluminum wheels.

NOTE

- *Do not use a wire brush or any abrasive cleaner, polishing compound, or solvent on aluminum wheels. They may damage the coating.*
- *Always use a sponge or soft cloth to clean the wheels.*
  Rinse the wheels thoroughly with lukewarm or cold water. Also, be sure to clean the wheels after driving on dusty or salted roads to help prevent corrosion.
- *Avoid washing your vehicle in an automatic car wash that uses high-speed or hard brushes.*
- *If your aluminum wheels lose luster, wax the wheels.*

(With Tire Pressure Monitoring System)
Check special requirements for Tire Pressure Monitoring System.
Refer to Tires and Wheels on page 5-35.

▼Convertible Top Maintenance*

The convertible top is made of a special high-grade material, but if it's not taken good care of, hardening, staining, and loss of luster will result. Maintain it under these guidelines.

Washing

Do not wait until the convertible top gets really dirty before cleaning it. Dirt that's there too long will cause deterioration.

1. Before washing, remove dust and coarse particulate with a soft brush.
2. Gently clean the convertible top with a synthetic neutral detergent, lots of water, and a soft brush.
3. Rinse it thoroughly with clean water to remove all the soap.
4. Wipe it as dry as you can before the water dries on it.
5. Then allow it to dry completely before lowering it.

⚠ CAUTION

- ➢ *Automatic and high-pressure car washes are harmful to a convertible top. Avoid them.*
- ➢ *Do not spray water directly on the area where the window glass and the convertible top meet. This would probably cause water to enter the cabin.*
- ➢ *Do not spray water with a hose or a car washing device directly on the seam area of the body and the convertible top as it could result in water penetrating the trunk.*

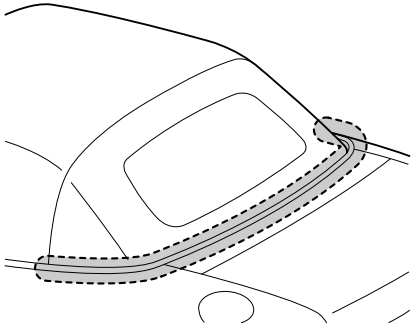

Appearance (Polyvinyl only)

Dress the convertible top once a month after washing and drying it well. For best results, use a water-based leather treatment or vinyl top dressing. This will help maintain good appearance and material condition of the convertible top.

*Some models.

⚠ CAUTION

- *Some leather treatment products can ruin the convertible top's gloss. Be careful of the one you choose.*
- *Test on an inconspicuous, small corner of the convertible top if you are not sure.*
- *Do not get any car wax on the convertible top.*
  If you do, remove it with a good leather cleaner.
- *Too much treatment on the convertible top can be as damaging as too little. Follow the manufacturer's directions.*
  Do not overdo it!
- *Let the convertible top dry completely before lowering after applying treatment or dressing.*

▼Hardtop Maintenance*

Washing

To help protect the hardtop's finish, use a soft cloth or sponge to wash it.
Insects, tar, tree sap, bird droppings, industrial fallout, and similar deposits can damage the finish if they are not removed immediately. When prompt washing with plain water is ineffective use a mild soap made for use on vehicles.

⚠ CAUTION

- *Don't use an automatic car wash.*
- *Don't use strong soap, chemical detergents, or hot water, and don't wash the hardtop in direct sunlight or when the surface is warm.*

Thoroughly rinse with lukewarm or cold water. Don't allow soap to dry on the finish.

Waxing

Wax the hardtop when water no longer beads on the paint. Always wash and dry it before waxing.

⚠ CAUTION

- *Wiping off dust or dirt with a dry cloth will scratch the finish.*
- *Don't use abrasive wax. This may damage the protective coating and discolor or deteriorate the paint.*

NOTE

A spot remover to remove oil, tar, and similar materials will usually also take off the wax. Rewax these areas.

▼Plastic Part Maintenance

- When cleaning the plastic lenses of the lights, do not use gasoline, kerosene, rectified spirit, paint, thinner, highly acidic detergents, or strongly alkaline detergents. Otherwise, these chemical agents can discolor or damage the surfaces resulting in a significant loss in functionality. If plastic parts become inadvertently exposed to any of these chemical agents, flush with water immediately.
- If plastic parts such as the bumpers become inadvertently exposed to chemical agents or fluids such as gasoline, oil, engine coolant, or battery fluid, it could cause discoloration, staining, or paint peeling. Wipe off any such chemical agents or fluids using a soft cloth immediately.

*Some models.

- High water temperature and high water pressure car washers are available depending on the type of high pressure car washer device. If the car washer nozzle is put too close to the vehicle or aimed at one area for an extended period of time, it could deform plastic parts or damage the paint.
- Do not use wax containing compounds (polish). Otherwise, it could result in paint damage.
- In addition, do not use an electrical or air tool to apply wax. Otherwise, the frictional heat generated could result in deformation of plastic parts or paint damage.

Interior Care

▼Dashboard Precautions

Prevent caustic solutions such as perfume and cosmetic oils from contacting the dashboard. They'll damage and discolor it. If these solutions get on the dashboard, wipe them off immediately.

⚠ CAUTION

Do not use glazing agents.
Glazing agents contain ingredients which may cause discoloration, wrinkling, cracks and peeling.

▼Cleaning the Upholstery and Interior Trim

Vinyl

Remove dust and loose dirt from vinyl with a whisk broom or vacuum cleaner. Clean vinyl with a leather-and-vinyl cleaner.

Leather*

Remove dust and sand first using a vacuum cleaner or other means, then wipe dirt off using a soft cloth with a leather cleaner or a soft cloth soaked in mild soap.
Wipe off the remaining cleaner or soap using a cloth soaked in clean water and wrung out well.
Remove moisture with a dry, soft cloth and allow the leather to further dry in a well-ventilated, shaded area. If the leather gets wet such as from rain, also remove moisture and dry it as soon as possible.

*Some models.

NOTE

- *Because genuine leather is a natural material, its surface is not uniform and it may have natural scars, scratches, and wrinkles.*
- *To maintain the quality for as long as possible, periodical maintenance, about twice a year, is recommended.*
- *Sand and dust on the seat surface may damage the overcoat of the genuine leather surfaces and accelerate wear.*
- *Greasy soiling on genuine leather may cause molding and stains.*
- *Rubbing hard with a stiff brush or cloth may cause damage.*
- *Do not wipe the leather using alcohol, chlorine bleach, or organic solvents such as thinner, benzene, or gasoline. Otherwise, it may cause discoloration or stains.*
- *If the seats get wet, promptly remove moisture with a dry cloth. Remaining moisture on the surface may cause deterioration such as hardening and shrinkage.*
- *Exposure to direct sunlight for long periods may cause deterioration and shrinkage. When parking the car under direct sunlight for long periods, shade the interior using sunshades.*
- *Do not leave vinyl products on the seats for long periods as they may affect the leather quality and coloring. If the cabin temperature becomes hot, the vinyl may deteriorate and adhere to the genuine leather.*

Fabric

Remove dust and loose dirt from fabric with a whisk broom or vacuum cleaner. Clean it with a mild soap solution good for upholstery and carpets. Remove fresh spots immediately with a fabric spot cleaner.

To keep the fabric looking clean and fresh, take care of it. Otherwise its color will be affected, it can be stained easily, and its fire-resistance may be reduced.

⚠ CAUTION

Use only recommended cleaners and procedures. Others may affect appearance and fire-resistance.

▼Cleaning the Lap/Shoulder Belt Webbing

Clean the webbing with a mild soap solution recommended for upholstery or carpets. Follow instructions. Don't bleach or dye the webbing; this may weaken it.

After cleaning the belts, thoroughly dry the belt webbing and make sure there is no remaining moisture before retracting them.

⚠ WARNING

Have an Authorized Mazda Dealer replace damaged seat belts immediately:

Using damaged seat belts is dangerous. In a collision, damaged belts cannot provide adequate protection.

▼Cleaning the Window Interiors

If the windows become covered with an oily, greasy, or waxy film, clean them with glass cleaner. Follow the directions on the container.

⚠ CAUTION

- *Do not scrape or scratch the inside of the window glass. It could damage the thermal filaments.*
- *When washing the inside of the window glass, use a soft cloth dampened in lukewarm water, gently wiping the thermal filaments.*
  Use of glass cleaning products could damage the thermal filaments.

9 Customer Information and Reporting Safety Defects

Important consumer information including warranties and add-on equipment.

Customer Assistance 9-2
Customer Assistance (U.S.A.) 9-2
Customer Assistance (Canada) 9-6
Customer Assistance (Puerto Rico) 9-9
Customer Assistance (Mexico) 9-10

Mazda Importer/Distributors 9-12
Importer/Distributor 9-12
Distributor in Each Area 9-12

Warranty 9-14
Warranties for Your Mazda 9-14
Outside the United States and Canada 9-15
Outside the United States 9-16
Outside Canada 9-17
Registering Your Vehicle in A Foreign Country (Except United States and Canada) 9-18
Add-On Non-Genuine Parts and Accessories 9-19

Cell Phones 9-20
Cell Phones Warning 9-20

Uniform Tire Quality Grading System (UTQGS) 9-21
Uniform Tire Quality Grading System (UTQGS) 9-21

Tire Information (U.S.A.) 9-23
Tire Labeling 9-23
Location of the Tire Label (Placard) 9-29
Tire Maintenance 9-32
Vehicle Loading 9-35
Steps for Determining the Correct Load Limit: 9-41

Reporting Safety Defects 9-42
Reporting Safety Defects (U.S.A.) 9-42
Reporting Safety Defects (Canada) ... 9-43

Service Publications 9-44
Service Publications 9-44

Customer Assistance (U.S.A.)

Your complete and permanent satisfaction is our business. We are here to serve you. All Authorized Mazda Dealers have the knowledge and the tools to keep your Mazda vehicle in top condition.
If you have any questions or recommendations for improvement regarding the service of your Mazda vehicle or servicing by Mazda Dealer personnel, we recommend that you take the following steps:

NOTE
If it becomes necessary to have the components or wiring system for the supplementary restraint system modified to accommodate a person with certain medical conditions in accordance with a certified physician, contact an Authorized Mazda Dealer.

▼STEP 1: Contact Your Mazda Dealer

Discuss the matter with an Authorized Mazda Dealer. This is the quickest and best way to address the issue. If your concern has not been resolved by the CUSTOMER RELATIONS, SALES, SERVICE, or PARTS MANAGER, then please contact the GENERAL MANAGER of the dealership or the OWNER.

▼STEP 2: Contact Mazda North American Operations

If for any reason you feel the need for further assistance after contacting your dealership management, you can reach Mazda North American Operations by one of the following ways.

Log on: at www.mazdaUSA.com

Answers to many questions, including how to locate or contact a local Mazda dealership in the U.S., can be found here.

E-mail: click on “Contact Us” located on the “Inside Mazda” tab, or at the bottom of the page at www.mazdaUSA.com

By phone at: 1 (800) 222-5500

By letter at:
Attn: Customer Assistance
Mazda North American Operations
7755 Irvine Center Drive
Irvine, CA 92618-2922
P.O. Box 19734
Irvine, CA 92623-9734

In order to serve you efficiently and effectively, please help us by providing the following information:

1. Your name, address, and telephone number
2. Year and model of vehicle
3. Vehicle Identification Number (17 digits, noted on your registration or title or located on the upper driver's side corner of the dash)
4. Purchase date and current mileage
5. Your dealer's name and location
6. Your question(s)

If you live outside the U.S.A., please contact your nearest Mazda Distributor.

▼STEP 3: Contact Better Business Bureau (BBB)

Mazda North American Operations realizes that mutual agreement on some issues may not be possible. As a final step to ensure that your concerns are being fairly considered, Mazda North American Operations has agreed to participate in a dispute settlement program administered by the Better Business Bureau (BBB) system, at no cost to you the consumer.

BBB AUTO LINE works with consumers and the manufacturer in an attempt to reach a mutually acceptable resolution of any warranty related concerns. If the BBB is not able to facilitate a settlement they will provide an informal hearing before an arbitrator.

You are required to resort to BBB AUTO LINE before exercising rights or seeking remedies under the Federal Magnuson-Moss Warranty Act, 15 U.S.C. § 2301 et seq. To the extent permitted by the applicable state “Lemon Law”, you are also required to resort to BBB AUTO LINE before exercising any rights or seeking remedies under the “Lemon Law”. If you choose to seek remedies that are not created by the Magnuson-Moss Warranty Act or the applicable state “Lemon Law”, you are not required to first use BBB AUTO LINE.

The whole process normally takes 40 days or less. The arbitration decision is not binding on you or Mazda unless you accept the decision. For more information about BBB AUTO LINE, including current eligibility standards, please call 1-800-955-5100 or visit the BBB website at www.lemonlaw.bbb.org.

Being truly committed to customer satisfaction is more than a phrase with Mazda. We hope to satisfy every customer directly, but if there is ever a question about our decision, Mazda believes in providing a fast, fair and free method such as the BBB AUTO LINE to ensure Mazda delivers on our commitment to do the right thing for our customers!

▼California Customers

1. Mazda North American Operations participates in BBB AUTO LINE, a mediation/arbitration program administered by the Council of Better Business Bureaus [4200 Wilson Boulevard, Arlington, Virginia 22203] through local Better Business Bureaus. BBB AUTO LINE and Mazda have been certified by the Arbitration Certification Program of the California Department of Consumer Affairs.
2. If you have a problem arising under a Mazda written warranty, we encourage you to bring it to our attention. If we are unable to resolve it, you may file a claim with BBB AUTO LINE. Claims must be filed with BBB AUTO LINE within six (6) months after the expiration of the warranty.
3. To file a claim with BBB AUTO LINE, call 1-800-955-5100. There is no charge for the call.
4. In order to file a claim with BBB AUTO LINE, you will have to provide your name and address, the brand name and vehicle identification number (VIN) of your vehicle, and a statement of the nature of your problem or complaint. You will also be asked to provide: the approximate date of your acquisition of the vehicle, the vehicle's current mileage, the approximate date and mileage at the time any problem(s) were first brought to the attention of Mazda or one of our dealers, and a statement of the relief you are seeking.
5. BBB AUTO LINE staff may try to help resolve your dispute through mediation. If mediation is not successful, or if you do not wish to participate in mediation, claims within the program's jurisdiction may be presented to an arbitrator at an informal hearing. The arbitrator's decision should ordinarily be issued within 40 days from the time your complaint is filed; there may be a delay of 7 days if you did not first contact Mazda about your problem, or a delay of up to 30 days if the arbitrator requests an inspection/report by an impartial technical expert or further investigation and report by BBB AUTO LINE.
6. You are required to use BBB AUTO LINE before asserting in court any rights or remedies conferred by California Civil Code Section 1793.22. You are also required to use BBB AUTO LINE before exercising rights or seeking remedies created by Title I of the Magnuson-Moss Warranty Act, 15 U.S.C. sec. 2301 et seq. If you choose to seek redress by pursuing rights and remedies not created by California Civil Code Section 1793.22 or Title I of the Magnuson-Moss Warranty Act, resort to BBB AUTO LINE is not required by those statutes.

7. California Civil Code Section 1793.2 (d) requires that, if Mazda or its representative is unable to repair a new motor vehicle to conform to the vehicle's applicable express warranty after a reasonable number of attempts, Mazda may be required to replace or repurchase the vehicle. California Civil Code Section 1793.22 (b) creates a presumption that Mazda has had a reasonable number of attempts to conform the vehicle to its applicable express warranties if, within 18 months from delivery to the buyer or 18,000 miles on the vehicle's odometer, whichever occurs first, one or more of the following occurs:
   - The same nonconformity [a failure to conform to the written warranty that substantially impairs the use, value or safety of the vehicle] results in a condition that is likely to cause death or serious bodily injury if the vehicle is driven **AND** the nonconformity has been subject to repair two or more times by Mazda or its agents **AND** the buyer or lessee has directly notified Mazda of the need for the repair of the nonconformity; OR
   - The same nonconformity has been subject to repair 4 or more times by Mazda or its agents **AND** the buyer has notified Mazda of the need for the repair of the nonconformity; OR
   - The vehicle is out of service by reason of repair of nonconformities by Mazda or its agents for a cumulative total of more than 30 calendar days after delivery of the vehicle to the buyer.

   NOTICE TO Mazda AS REQUIRED ABOVE SHALL BE SENT TO THE FOLLOWING ADDRESS:
   Mazda North American Operations
   7755 Irvine Center Drive
   Irvine, CA 92618
   ATTN: Customer Mediation

8. The following remedies may be sought in BBB AUTO LINE: repairs, reimbursement for money paid to repair a vehicle or other expenses incurred as result of a vehicle nonconformity, repurchase or replacement of your vehicle, and compensation for damages and remedies available under Mazda's written warranty or applicable law.

9. The following remedies may **not** be sought in BBB AUTO LINE: punitive or multiple damages, attorneys' fees, or consequential damages other than as provided in California Civil Code Section 1794 (a) and (b).

10. You may reject the decision issued by a BBB AUTO LINE arbitrator. If you reject the decision, you will be free to pursue further legal action. The arbitrator's decision and any findings will be admissible in a court action.

11. If you accept the arbitrator's decision, Mazda will be bound by the decision, and will comply with the decision within a reasonable time not to exceed 30 days after we receive notice of your acceptance of the decision.

12. Please call BBB AUTO LINE at 1-800-955-5100 for further details about the program.

Customer Assistance (Canada)

▼Satisfaction Review Process

Your complete and permanent satisfaction is of primary concern to Mazda. All Authorized Mazda Dealers have both the knowledge and tools to keep your Mazda in top condition. In our experience, any questions, problems, or complaints regarding the operation of your Mazda or any other general service transactions are most effectively resolved by your dealer. If the cause of your dissatisfaction cannot adequately be addressed by normal dealership procedures, we recommend that you take the following steps:

▼STEP 1: Contact the Mazda Dealer

Discuss the matter with a member of dealership management. If the Service Manager has already reviewed your concerns, contact the owner of the dealership or its General Manager.

▼STEP 2: Contact the Mazda Regional Office

If you feel that you still require assistance, ask the dealer Service Manager to arrange for you to meet the local Mazda Service Representative. If more expedient, contact Mazda Canada Inc.Regional Office nearest you for such arrangements. Regional Office address and phone numbers are shown (page 9-8).

▼STEP 3: Contact the Mazda Customer Relations Department

If still not substantially satisfied, contact the Customer Relations Department, Mazda Canada Inc., 55 Vogell Road, Richmond Hill, Ontario, L4B 3K5 Canada TEL: 1 (800) 263-4680.
Provide the Department with the following information:

1. Your name, address and telephone number
2. Year and model of vehicle
3. Vehicle Identification Number (VIN). Refer to the “Vehicle Identification Labels” page of section 10 of this manual for the location of the VIN.
4. Purchase date
5. Present odometer reading
6. Your dealer's name and location
7. The nature of your problem and/or cause of dissatisfaction

The Department, in cooperation with the local Mazda Service Representative, will review the case to determine if everything possible has been done to ensure your satisfaction.

Please recognize that the resolution of service problems in most cases requires the use of your Mazda dealer's service facilities, personnel and equipment. We urge you to follow the above three steps in sequence for most effective results.

▼Mediation/Arbitration Program

Occasionally a customer concern cannot be resolved through Mazda's Customer Satisfaction Program. If after exhausting the procedures in this manual your concern is still not resolved, you have another option.

Mazda Canada Inc. participates in an arbitration program administered by the Canadian Motor Vehicle Arbitration Plan (CAMVAP). CAMVAP will advise you about how your concern may be reviewed and resolved by an independent third party through binding arbitration.

Your complete satisfaction is the goal of Mazda Canada Inc. and our dealers. Mazda's participation in CAMVAP makes a valuable contribution to our achieving that goal. There is no charge for using CAMVAP. CAMVAP results are fast, fair and final as the award is binding on both you and Mazda Canada Inc.

▼Canadian Motor Vehicle Arbitration Plan (CAMVAP)

If a specific item of concern arises, where a solution cannot be reached between an owner, Mazda, and/or one of its dealers (that all parties cannot agree upon), the owner may wish to use the services offered by the Canadian Motor Vehicle Arbitration Plan (CAMVAP).

CAMVAP uses the services of Provincial Administrators to assist consumers in scheduling and preparing for their arbitration hearings. However, before you can proceed with CAMVAP you must follow your Mazda dispute resolution process as outlined previously.

Customer Assistance

CAMVAP is fully implemented in all provinces and territories.
Consumers wishing to obtain further information about the Program should contact the Provincial Administrator at 1 (800) 207-0685, or by contacting the Canadian Motor Vehicle Arbitration Plan Office at:

Canadian Motor Vehicle Arbitration Plan
235 Yorkland Boulevard, suite 300
North York, Ontario
M2J 4Y8
http://camvap.ca
Provincial Administrators may be reached locally as listed below:

Province/Territory	CAMVAP Number
British Columbia & Yukon Territories	1 (800) 207-0685
Alberta & Northwest Territories	1 (800) 207-0685
Saskatchewan	1 (800) 207-0685
Manitoba	1 (800) 207-0685
Ontario	1 (800) 207-0685
Atlantic Canada	1 (800) 207-0685
Quebec	1 (800) 207-0685

▼Regional Offices

REGIONAL OFFICES	AREAS COVERED
MAZDA CANADA INC. WESTERN REGION 8171 ACKROYD ROAD SUITE 2000 RICHMOND B.C. V6X 3K1 (604) 303-5670	ALBERTA, BRITISH COLUMBIA, MANITOBA, SASKATCHEWAN, YUKON
MAZDA CANADA INC. CENTRAL/ATLANTIC REGION 55 VOGELL ROAD, RICHMOND HILL, ONTARIO, L4B 3K5 (905) 787-7000	ONTARIO
MAZDA CANADA INC. QUEBEC REGION 6111 ROUTE TRANS CANADIENNE POINTE CLAIRE, QUEBEC H9R 5A5 (514) 694-6390	QUEBEC, NEW BRUNSWICK, NOVA SCOTIA, PRINCE EDWARD ISLAND, NEWFOUNDLAND

Customer Assistance (Puerto Rico)

Your complete and permanent satisfaction is our business. That is why all Authorized Mazda Dealers have the knowledge and the tools to keep your Mazda vehicle in top condition.
If you have any questions or recommendations for improvement regarding the service of your Mazda vehicle or servicing by Mazda Dealer personnel, we recommend that you take the following steps:

▼STEP 1

Discuss the matter with an Authorized Mazda Dealer. This is the quickest and best way to address the issue. If your concern has not been resolved by the CUSTOMER RELATIONS, SALES, SERVICE, or PARTS MANAGER, then please contact the GENERAL MANAGER of the dealership or the OWNER.

▼STEP 2

If, after following STEP 1, you feel the need for further assistance, please contact your area's Mazda representative (Indicated on the next page).

Please help us by providing the following information:

1. Your name, address, and telephone number
2. Year and model of vehicle
3. Vehicle Identification Number (17 digits, noted on your registration or title or located on the upper driver's side corner of the dash)
4. Purchase date and current mileage
5. Your dealer's name and location
6. Your question(s)

Customer Assistance (Mexico)

Your complete and permanent satisfaction is our business. We are here to serve you. All Authorized Mazda Dealers have the knowledge and the tools to keep your Mazda vehicle in top condition.
If you have any questions or recommendations for improvement regarding the service of your Mazda vehicle or servicing by Mazda Dealer personnel, we recommend that you take the following steps:

▼STEP 1: Contact Your Mazda Dealer

Discuss the matter with an Authorized Mazda Dealer. This is the quickest and best way to address the issue.

- If your concern has not been resolved by the CUSTOMER RELATIONS, SALES, SERVICE, or PARTS MANAGER, then please contact the GENERAL MANAGER of the dealership or the OWNER.
- If it becomes necessary to have the components or wiring system for the supplementary restraint system modified to accommodate a person with certain medical conditions in accordance with a certified physician, go to STEP2.

▼STEP 2: Contact Mazda Motor de Mexico

If for any reason you feel the need for further assistance after contacting your dealership management and it becomes necessary to have the components or wiring system for the supplementary restraint system modified to accommodate a person with certain medical conditions in accordance with a certified physician, you can reach Mazda Motor de Mexico by one of the following ways.

Log on: at www.MazdaMexico.com.mx

Answers to many questions, including how to locate or contact a local Mazda dealership in Mexico, can be found here.

E-mail: click on “Contactanos” at the top of the page at www.MazdaMexico.com.mx

By phone at: 1 (866) 315 0220

By letter at:
Attn: Customer Assistance
Mazda North American Operations
7755 Irvine Center Drive
Irvine, CA 92618-2922
P.O. Box 19734
Irvine, CA 92623-9734

Customer Assistance

In order to serve you efficiently and effectively, please help us by providing the following information:

1. Your name, address, and telephone number
2. Year and model of vehicle
3. Vehicle Identification Number (17 digits, noted on your registration or title or located on the upper driver's side corner of the dash)
4. Purchase date and current mileage
5. Your dealer's name and location
6. Your question(s)

Mazda Importer/Distributors

Importer/Distributor

▼U.S.A.

Mazda North American Operations
7755 Irvine Center Drive
Irvine, CA 92618-2922 U.S.A.
P.O. Box 19734
Irvine, CA 92623-9734 U.S.A.
TEL: 1 (800) 222-5500 (in U.S.A.)
(949) 727-1990 (outside U.S.A.)

Distributor in Each Area

▼CANADA

Mazda Canada Inc.
55 Vogell Road, Richmond Hill,
Ontario, L4B 3K5 Canada
TEL: 1 (800) 263-4680 (in Canada)
(905) 787-7000 (outside Canada)

▼PUERTO RICO/U.S. Virgin Island

Plaza Motors Corp. (Mazda de Puerto Rico)
P.O. Box 362722, San Juan, Puerto Rico
00936-2722
TEL: (787) 641-9300

▼MEXICO

Mazda Motor de Mexico
Mario Pani # 150, PB Col. Lomas de
Santa Fe Mexico, D.F. C.P. 05300 Del.
Cuajimalpa
TEL: Center of Attention to Clients:
01 (800) 016 2932. in Mexico

▼GUAM

Triple J Motors
157 South Marine Drive, Tamuning,
GUAM 96911 USA
P.O. Box 6066 Tamuning, Guam 96931
TEL: (671) 649-6555

▼SAIPAN

Pacific International Marianas, Inc.
(d.b.a. Midway Motors)
P.O. Box 887 Saipan, MP 96950
TEL: (670) 234-7524

Triple J Saipan, Inc.
(d.b.a. Triple J Motors)
P.O. Box 500487 Saipan, MP 96950-0487
TEL: (670) 234-7133/3051

▼AMERICAN SAMOA

Polynesia Motors, Inc.
P.O. Box 1120, Pago Pago, American Samoa 96799
TEL: (684) 699-9347

Warranties for Your Mazda

- New Vehicle Limited Warranty
- Distributor Major Component Limited Warranty (Canada only)
- Safety Restraint System Limited Warranty
- Anti-perforation Limited Warranty
- Federal Emission Control Warranty (U.S.A. only)
  - Emission Defect Warranty
  - Emission Performance Warranty
- California Emission Control Warranty (U.S.A. only)
- Emission Control Warranty (Canada only)
- Replacement Parts and Accessories Limited Warranty
- Tire Warranty

NOTE
Detailed warranty information is provided with your Mazda.

Outside the United States and Canada

Government regulations in the United States and Canada require that automobiles meet specific emission regulations and safety standards. Therefore, vehicles built for use in the United States, its territories, and Canada may differ from those sold in other countries.

The differences may make it difficult or even impossible for your vehicle to receive satisfactory servicing in other countries. We strongly recommend that you NOT take your Mazda outside these areas.
You may have these problems if you do:

- Recommended fuel may be unavailable. Any kind of leaded fuel or low-octane fuel will affect vehicle performance and damage the emission controls and engine.
- Proper repair facilities, tools, testing equipment, and replacement parts may not be available.

The Mazda warranty applies only to Mazda vehicles registered and normally operated in the United States, its territories, and Canada.

Outside the United States

Government regulations in the United States require that automobiles meet specific emission regulations and safety standards. Therefore, vehicles built for use in the United States may differ from those sold in other countries.

The differences may make it difficult or even impossible for your vehicle to receive satisfactory servicing in other countries. We strongly recommend that you NOT take your Mazda outside the United States. However, in the event that you are moving to Canada permanently, Mazda vehicles built for use in the United States could be eligible for exportation to Canada with specific vehicle modifications to comply with the Canadian Motor Vehicle Safety Standards (CMVSS).

NOTE
The above is applicable for a permanent import/export situation and not related to travelers on vacation.

You may have the following problems if you do take your vehicle outside of the United States:
- Recommended fuel may be unavailable. Any kind of leaded fuel or low-octane fuel will affect vehicle performance and damage the emission controls and engine.
- Proper repair facilities, tools, testing equipment, and replacement parts may not be available.

Please refer to your Manufacturer's Warranty Booklet for more information.

Outside Canada

Government regulations in Canada require that automobiles meet specific emission regulations and safety regulations. Therefore, vehicles built for use in Canada may differ from those sold in other countries.

The differences may make it difficult or even impossible for your vehicle to receive satisfactory servicing in other countries. We strongly recommend that you NOT take your Mazda outside Canada. However, in the event that you are moving to the United States permanently, Mazda vehicles built for use in Canada could be eligible for exportation to the United States with specific vehicle modifications to comply with the United States Federal Motor Vehicle Safety Standards (FMVSS).

NOTE
The above is applicable for a permanent import/export situation and not related to travelers on vacation.

You may have the following problems if you do take your vehicle outside of Canada:
- Recommended fuel may be unavailable. Any kind of leaded fuel or low-octane fuel will affect vehicle performance and damage the emission controls and engine.
- Proper repair facilities, tools, testing equipment, and replacement parts may not be available.

Please refer to your Manufacturer's Warranty Booklet for more information.

Registering Your Vehicle in A Foreign Country (Except United States and Canada)

Registering your vehicle in a foreign country may be problematic depending on whether it meets the specific emission and safety standards of the country in which the vehicle will be driven. Consequently, your vehicle may require modifications at personal expense in order to meet the regulations.
In addition, you should be aware of the following issues:
Satisfactory vehicle servicing may be difficult or impossible in another country.

The fuel specified for your vehicle may be unavailable.

Parts, servicing techniques, and tools necessary to maintain and repair your vehicle may be unavailable.

There might not be an Authorized Mazda Dealer in the country you plan to take your vehicle.

The Mazda warranty is valid only in certain countries.

Add-On Non-Genuine Parts and Accessories

Non-genuine parts and accessories for Mazda vehicles can be found in stores.
These may fit your vehicle, but they are not approved by Mazda for use with Mazda vehicles. When you install non-genuine parts or accessories, they could affect your vehicle's performance or safety systems; the Mazda warranty doesn't cover this. Before you install any non-genuine parts or accessories, consult an Authorized Mazda Dealer.

WARNING

Always consult an Authorized Mazda Dealer before you install non-genuine parts or accessories:

Installation of non-genuine parts or accessories is dangerous. Improperly designed parts or accessories could seriously affect your vehicle's performance or safety systems. This could cause you to have an accident or increase your chances of injuries in an accident.

Be very careful in choosing and installing add-on electrical equipment, such as mobile telephones, two-way radios, stereo systems, and car alarm systems:

Incorrectly choosing or installing improper add-on equipment or choosing an improper installer is dangerous. Essential systems could be damaged, causing engine stalling, air-bag (SRS) activation, ABS/TCS/DSC inactivation, or a fire in the vehicle.

Mazda assumes no responsibility for death, injury, or expenses that may result from the installation of add-on non-genuine parts or accessories.

Cell Phones Warning

WARNING

Please comply with the legal regulations concerning the use of communication equipment in vehicles in your State or Province:

Use of any electrical devices such as cell phones, computers, portable radios, vehicle navigation or other devices by the driver while the vehicle is moving is dangerous. Dialing a number on a cell phone while driving also ties-up the driver's hands. Use of these devices will cause the driver to be distracted and could lead to a serious accident. If a passenger is unable to use the device, pull off the right-of-way to a safe area before use. If use of a cell phone is necessary despite this warning, use a hands-free system to at least leave the hands free to drive the vehicle. Never use a cell phone or other electrical devices while the vehicle is moving and, instead, concentrate on the full-time job of driving.

Uniform Tire Quality Grading System (UTQGS)

This information relates to the tire grading system developed by the U.S. National Highway Traffic Safety Administration for grading tires by tread wear, traction, and temperature performance.

▼Tread Wear

The tread wear grade is a comparative rating based on the wear rate of the tire when tested under controlled conditions on a specified government test course.
For example, a tire graded 150 would wear one-and-a-half times as well on the government course as a tire graded 100.

The relative performance of tires depends upon the actual conditions of their use, however, and may depart significantly from the norm because of variations in driving habits, service practices and differences in road characteristics and climate.

▼Traction-AA, A, B, C

The traction grades, from highest to lowest, are AA, A, B, and C. These grades represent the tire's ability to stop on wet pavement as measured under controlled conditions on specified government test surfaces of asphalt and concrete. A tire marked C may have poor traction performance.

⚠ WARNING

The traction grade assigned to this tire is based on braking (straight ahead) traction tests and does not include acceleration cornering (turning), hydroplaning, or peak traction characteristics.

▼Temperature-A, B, C

The temperature grades A (the highest), B, and C, represent the tire's resistance to the generation of heat and its ability to dissipate heat when tested under controlled conditions on a specified indoor laboratory test wheel.
Sustained high temperature can cause the material of the tire to degenerate and reduce tire life, and excessive temperatures can lead to sudden tire failure.

Grade C corresponds to a level of performance which all passenger vehicle tires must meet under the Federal Motor Vehicle Safety Standard No. 109. Grades B and A represent higher levels of performance on the laboratory test wheel than the minimum required by law.

Uniform Tire Quality Grading System (UTQGS)

WARNING

Keep your vehicle's tires properly inflated and not overloaded:

Driving with improperly inflated or overloaded tires is dangerous. Excessive speed, underinflation, or excessive loading, either separately or in combination, can cause heat buildup and possible tire failure. The temperature grade for this tire is established for a tire that is properly inflated and not overloaded.

These grades will be added to the sidewalls of passenger vehicle tires over the next several years according to a schedule established by the NHTSA and the tire manufacturers.

The grade of tires available as standard or optional equipment on Mazda vehicles may vary with respect to grade.

ALL PASSENGER VEHICLE TIRES MUST CONFORM TO THESE GRADES AND TO ALL OTHER FEDERAL TIRE-SAFETY REQUIREMENTS.

▼Uniform Tire Quality Grading

Quality grades can be found where applicable on the tire sidewall between tread shoulder and maximum section width.
For example:
Treadwear 200 Traction AA Temperature A

UTQGS MARK (example)

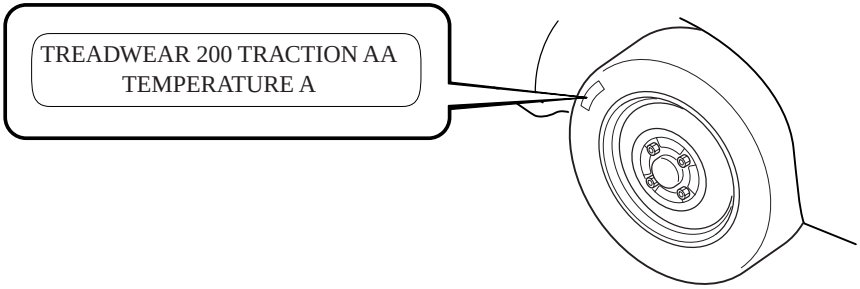

Tire Labeling

Federal law requires tire manufacturers to place standardized information on the sidewall of all tires. This information identifies and describes the fundamental characteristics of the tire and also provides a tire identification number for safety standard certification and in case of a recall.

▼Information on Passenger Vehicle Tires

Please refer to the sample below.

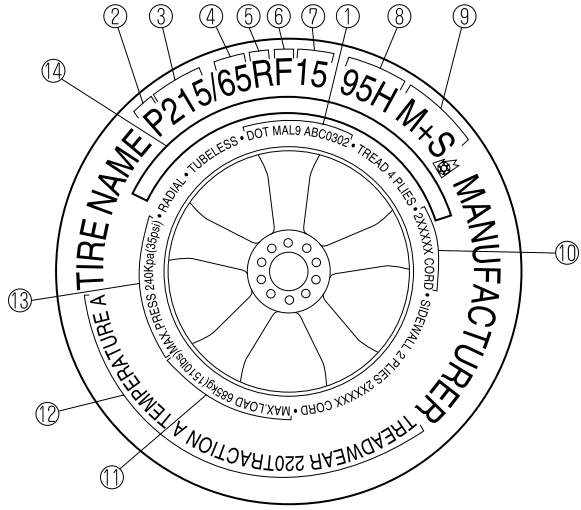

1. TIN: U.S. DOT tire identification number
2. Passenger car tire
3. Nominal width of tire in millimeters
4. Ratio of height to width (aspect ratio)
5. Radial
6. Run-flat tire
7. Rim diameter code
8. Load index & speed symbol
9. Severe snow conditions
10. Tire ply composition and materials used

Tire Information (U.S.A.)

11. Max. load rating
12. Tread wear, traction and temperature grades
13. Max. permissible inflation pressure
14. SAFETY WARNING

P215/65R15 95H is an example of a tire size and load index rating. Here is an explanation of the various components of that tire size and load index rating. Note that the tire size and load index rating may be different from the example.

P

Indicates a tire that may be installed on cars, SUVs, minivans and light trucks as designated by the Tire and Rim Association (T&RA).

NOTE

If your tire size does not begin with a letter this may mean it is designated by either ETRTO (European Tire and Rim Technical Organization) or JATMA (Japan Tire Manufacturing Association).

215

“215” is the nominal width of the tire in millimeters. This three-digit number gives the width in millimeters of the tire from sidewall edge to sidewall edge. In general, the larger the number, the wider the tire.

65

“65” is the aspect ratio. This two-digit number indicates the tire's ratio of height to width.

R

“R” is the tire construction symbol. R indicates “Radial ply construction”.

15

“15” is the wheel rim diameter in inches.

95

“95” is the Load Index. This two-or three-digit number indicates how much weight each tire can support.

H

"H" is the speed rating. The speed rating denotes the maximum speed for which the use of the tire is rated.

Letter Rating	Speed Rating
Q	99 mph
R	106 mph
S	112 mph
T	118 mph
U	124 mph
H	130 mph
V	149 mph
W	168* mph
Y	186* mph

* For tires with a maximum speed capability over 149 mph, tire manufacturers sometimes use the letters ZR. For tires with a maximum speed capability over 186 mph, tire manufacturers always use the letters ZR.

M+ S or M/S: Mud and Snow

AT: All Terrain.
AS: All Season. The "M+ S" or "M/S" indicates that the tire has some functional use in mud and snow.

U.S. DOT Tire Identification Number (TIN)

This begins with the letters "DOT" which indicates the tire meets all federal standards. The next two numbers or letters are the plant code where it was manufactured, and the last four numbers represent the week and year the tire was manufactured. For example, the numbers 457 means the 45st week of 1997. After 2000 the numbers go to four digits. For example, the number 2102 means the 21th week of 2002. The other numbers are marketing codes used at the manufacturer's discretion. This information is used to contact consumers if a tire defect requires a recall.

Tire Ply Composition and Materials Used

The number of plies indicates the number of layers of rubber-coated fabric in the tire. In general, the greater the number of plies, the more weight a tire can support. Tire manufacturers also must indicate the tire materials, which include steel, nylon, polyester, and other.

Maximum Load Rating

This number indicates the maximum load in kilograms and pounds that can be carried by the tire.

Maximum Permissible Inflation Pressure

This number is the greatest amount of air pressure that should ever be put in the tire under normal driving conditions.

Tire Information (U.S.A.)

Tread Wear, Traction and Temperature Grades

Tread wear: The tread wear grade is a comparative rating based on the wear rate of the tire when tested under controlled conditions on a specified government test course. For example, a tire graded 150 would wear one and one-half (1 1/2) times as well on the government course as a tire graded 100.
Traction: The traction grades, from highest to lowest are AA, A, B, and C. The grades represent the tire's ability to stop on wet pavement as measured under controlled conditions on specified government test surfaces of asphalt and concrete. A tire marked C may have poor traction performance.
Temperature: The temperature grades are A (the highest), B and C, representing the tire's resistance to the generation of heat and its ability to dissipate heat when tested under controlled conditions on a specified indoor laboratory test wheel.

Snow Tires

In some heavy snow areas, local governments may require true snow tires, those with very deeply cut tread. These tires should only be used in pairs or placed on all four wheels. Make sure you purchase snow tires that are the same size and construction type as the other tires on your vehicle.

SAFETY WARNING

The following safety warning appears on the tire's sidewall.
SERIOUS INJURY MAY RESULT FROM:

- EXPLOSION OF TIRE/RIM ASSEMBLY DUE TO IMPROPER MOUNTING-MATCH TIRE DIAMETER TO RIM DIAMETER; NEVER EXCEED 40 psi (275 kPa) TO SEAT BEADS-ONLY SPECIALLY TRAINED PERSONS SHOULD MOUNT TIRES.
- TIRE FAILURE DUE TO UNDER-INFLATION/OVERLOADING/DAMAGE-FOLLOW OWNER'S MANUAL AND PLACARD IN VEHICLE-FREQUENTLY CHECK INFLATION PRESSURE AND INSPECT FOR DAMAGE.

▼Information on Temporary Tires

Please refer to the sample below.

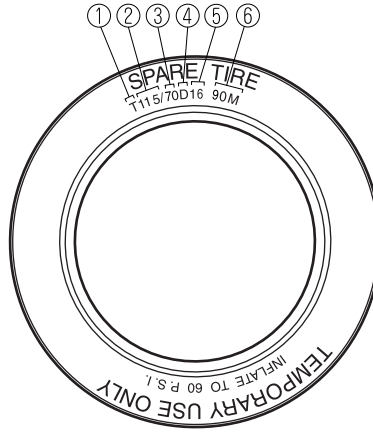

1. Temporary tires
2. Nominal width of tire in millimeters
3. Ratio of height to width (aspect ratio)
4. Diagonal
5. Rim diameter code
6. Load index & speed symbol

T115/70D 16 90M is an example of a tire size and load index rating. Here is an explanation of the various components of that tire size and load index rating. Note that the tire size and load index rating may be different from the example.

T

Indicates a tire that may be installed on cars, SUVs, minivans and light trucks as designated by the Tire and Rim Association (T&RA).

115

“115” is the nominal width of the tire in millimeters. This three-digit number gives the width in millimeters of the tire from sidewall edge to sidewall edge. In general, the larger the number, the wider the tire.

Tire Information (U.S.A.)

70

“70” is the aspect ratio. This two-digit number indicates the tire's ratio of height to width.

D

“D” is the tire construction symbol. D indicates “diagonal ply construction”.

16

“16” is the wheel rim diameter in inches.

90

“90” is the Load Index. This two-or three-digit number indicates how much weight each tire can support.

M

“M” is the speed rating. The speed rating denotes the maximum speed for which the use of the tire is rated.

Letter Rating	Speed Rating
M	81 mph

Location of the Tire Label (Placard)

You will find the tire label containing tire inflation pressure by tire size and other important information on the driver's side B-pillar or on the edge of the driver's door frame.

SAMPLE

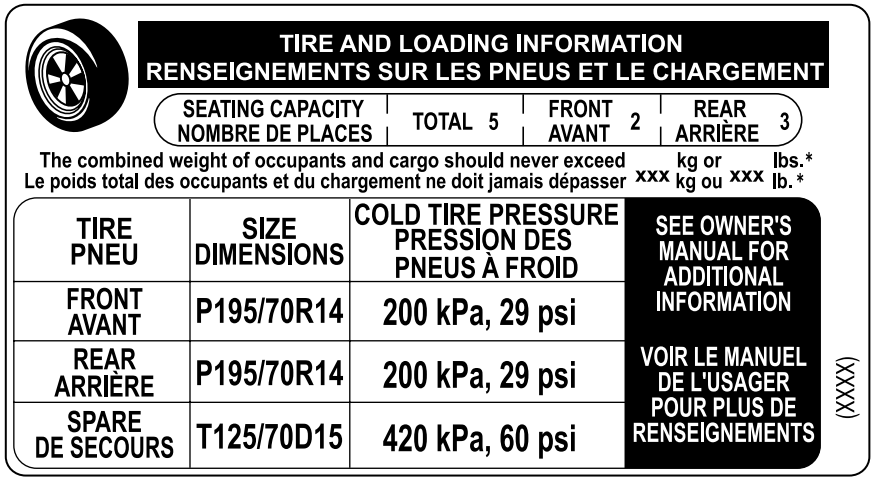

TIRE AND LOADING INFORMATION
RENSEIGNEMENTS SUR LES PNEUS ET LE CHARGEMENT

SEATING CAPACITY NOMBRE DE PLACES	TOTAL 5	FRONT AVANT 2	REAR ARRIÈRE 3

The combined weight of occupants and cargo should never exceed xxx kg or xxx lbs.*
Le poids total des occupants et du chargement ne doit jamais dépasser xxx kg ou xxx lb.*

TIRE PNEU	SIZE DIMENSIONS	COLD TIRE PRESSURE PRESSION DES PNEUS À FROID	SEE OWNER'S MANUAL FOR ADDITIONAL INFORMATION VOIR LE MANUEL DE L'USAGER POUR PLUS DE RENSEIGNEMENTS
FRONT AVANT	P195/70R14	200 kPa, 29 psi	
REAR ARRIÈRE	P195/70R14	200 kPa, 29 psi	
SPARE DE SECOURS	T125/70D15	420 kPa, 60 psi	

(XXXX)

▼Recommended Tire Inflation Pressure

On the tire label you will find the recommended tire inflation pressure in both kPa and psi for the tires installed as original equipment on the vehicle. It is very important that the inflation pressure of the tires on your vehicle is maintained at the recommended pressure. You should check the tire pressure regularly to insure that the proper inflation pressure is maintained.
Refer to Tires on page 10-7.

NOTE
Tire pressures listed on the vehicle placard or tire information label indicate the recommended cold tire inflation pressure, measured when the tires are cold, after the vehicle has been parked for at least 3 hours. As you drive, the temperature in the tire warms up, increasing the tire pressure.

Tire Information (U.S.A.)

⚠ WARNING

Always check the tire inflation pressures on a regular basis according to the recommended tire inflation pressure on the tire label and in conjunction with the information in this owner's manual:

Driving your vehicle with under-inflated tires is dangerous.
Under-inflation is the most common cause of failures in any kind of tire and may result in severe cracking, tread separation or "blowout", with unexpected loss of vehicle control and increased risk of injury. Under-inflation increases sidewall flexing and rolling resistance, resulting in heat buildup and internal damage to the tire. It results in unnecessary tire stress, irregular wear, loss of control and accidents. A tire can lose up to half of its air pressure and not appear to be flat!
It is impossible to determine whether or not tires are properly inflated just by looking at them.

▼Checking Tire Pressure

1. When you check the air pressure, make sure the tires are cold meaning they are not hot from driving even a mile.
2. Remove the cap from the valve on one tire.
3. Firmly press a tire gauge onto the valve.
4. Add air to achieve recommended air pressure.
5. If you overfill the tire, release air by pushing on the metal stem in the center of the valve. Then recheck the pressure with your tire gauge.
6. Replace the valve cap.
7. Repeat with each tire, including the spare.

NOTE
Some spare tires require higher inflation pressure.

8. Visually inspect the tires to make sure there are no nails or other objects embedded that could poke a hole in the tire and cause an air leak.
9. Check the sidewalls to make sure there are no gouges, cuts, bulges, cracks or other irregularities.

NOTE
Warm tires normally exceed recommended pressures. Don't release air from warm tires to adjust the pressure.
Under-inflation can cause serious failures and accidents.
Over-inflation can produce a harsh ride and the greater possibility of damage from road hazards.

▼Glossary of Terms

Tire Placard: A label indicating the OE tire sizes, recommended inflation pressure, and the maximum weight the vehicle can carry.
Tire Identification Number (TIN): A number on the sidewall of each tire providing information about the tire brand and manufacturing plant, tire size, and date of manufacture.
Inflation Pressure: A measure of the amount of air in a tire.
kPa: Kilopascal, the metric unit for air pressure.
psi: Pounds per square inch, the English unit for air pressure.
B-pillar: The structural member at the side of the vehicle behind the front door.
Original Equipment (OE): Describes components originally equipped on the vehicle.
Vehicle Load Limit: The maximum value of the combination weight of occupants and cargo.
Bead Area of the Tire: Area of the tire next to the rim.
Sidewall Area of the Tire: Area between the bead area and the tread.
Tread Area of the Tire: Area on the perimeter of the tire that contacts the road when it's mounted on the vehicle.

Seating capacity means the total allowable number of vehicle occupants. Seating capacity is described on the tire label.

Production options weight is the combination weight of installed regular production options weighing over 2.3 kilograms in excess of the standard items which they replace, and not previously considered in the curb weight or accessory weight, including heavy duty brakes, ride levelers, roof rack, heavy duty battery, and special trim.

Rim is the metal support (wheel) for a tire or a tire and tube assembly upon which the tire beads are seated.

Tire Maintenance

Improper or inadequate vehicle maintenance can cause tires to wear abnormally. Here are some important maintenance points:

▼Tire Inflation Pressure

Inspect all tire pressure monthly (including the spare) when the tires are cold. Maintain recommended pressures for the best ride, top handling, and minimum tire wear. Use the pressures specified on the vehicle tire information placard or tire label for optimum service.

▼Tire Rotation

To equalize tread wear, rotate the tires every 12,000 km (7,500 miles) or sooner if irregular wear develops. During rotation, inspect them for correct balance.

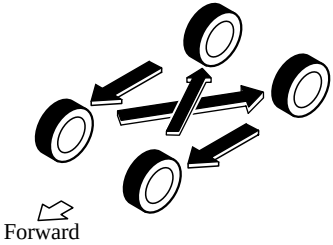

Do not include (TEMPORARY USE ONLY) spare tire in rotation.

Inspect the tires for uneven wear and damage. Abnormal wear is usually caused by one or a combination of the following:

- Incorrect tire pressure
- Improper wheel alignment
- Out-of-balance wheel
- Severe braking

After rotation, inflate all tire pressures to specification (page 10-7) and inspect the lug nuts for tightness.

⚠ CAUTION

Rotate unidirectional tires and radial tires that have an asymmetrical tread pattern or studs only from front to rear, not from side to side. Tire performance will be weakened if rotated from side to side.

(With limited-slip differential)
Don't use the following:
- *Tires not of the designated size*
- *Tires of different sizes or types at the same time*
- *Tires not sufficiently inflated*

If these instructions aren't followed, the rotation of the left and right wheels will be different and will thus apply a constant load on the limited-slip differential.
This will cause a malfunction.

▼Replacing a Tire

⚠ WARNING

Always use tires that are in good condition:
Driving with worn tires is dangerous. Reduced braking, steering, and traction could result in an accident.

If a tire wears evenly, a wear indicator will appear as a solid band across the tread. Replace the tire when this happens.

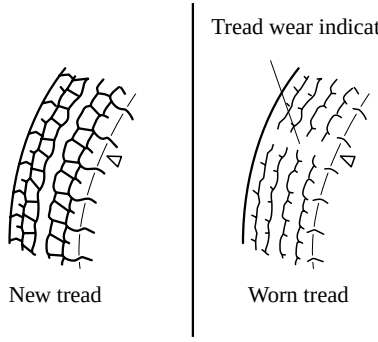

You should replace the tire before the band crosses the entire tread.

NOTE
Tires degrade over time, even when they are not being used on the road. It is recommended that tires generally be replaced when they are 6 years or older. Heat caused by hot climates or frequent high loading conditions can accelerate the aging process. The period in which the tire was manufactured (both week and year) is indicated by a 4-digit number.
Refer to The tire labeling on page 9-23.

Tire Information (U.S.A.)

▼Safety Practices

The way you drive has a great deal to do with your tire mileage and safety. So cultivate good driving habits for your own benefit.

- Observe posted speed limits
- Avoid fast starts, stops and turns
- Avoid potholes and objects on the road
- Do not run over curbs or hit the tire against the curb when parking

⚠ CAUTION

If you feel a sudden vibration or ride disturbance while driving or you suspect your tire or vehicle has been damaged, immediately reduce your speed. Drive with caution until you can safely pull off the road. Stop and inspect the tire for damage. If the tire is under-inflated or damaged, deflate it, remove the tire and rim and replace it with your spare tire. If you cannot detect a cause, have the vehicle towed to the nearest vehicle or tire dealer to have the vehicle inspected.

Vehicle Loading

WARNING

Do not tow a trailer with this vehicle:

Towing a trailer with this vehicle is dangerous because it has not been designed to tow a trailer and doing so will affect the drive system which could result in vehicle damage.

This section will guide you in the proper loading of your vehicle, to keep your loaded vehicle weight within its design rating capability. Properly loading your vehicle will provide maximum return of vehicle design performance. Before loading your vehicle, familiarize yourself with the following terms for determining your vehicle's weight ratings, from the vehicle's Safety Certification Label and Tire and Load Information Label:

WARNING

Overloaded Vehicle:

Overloading a vehicle is dangerous. The results of overloading can have serious consequences in terms of passenger safety. Too much weight on a vehicle's suspension system can cause spring or shock absorber failure, brake failure, handling or steering problems, irregular tire wear, tire failure or other damage. Overloading makes a vehicle harder to drive and control. It also increases the distance required for stopping. In cases of serious overloading, brakes can fail completely, particularly on steep grades. The load a tire will carry safely is a combination of the size of the tire, its load range, and corresponding inflation pressure.

Never overload the vehicle and always observe the vehicle's weight ratings from the vehicle's Safety Certification and Tire and Load Information labels.

Tire Information (U.S.A.)

Base Curb Weight is the weight of the vehicle including a full tank of fuel and all standard equipment. It does not include passengers, cargo, or optional equipment.

Vehicle Curb Weight is the weight of your new vehicle when you picked it up from your dealer plus any aftermarket equipment.

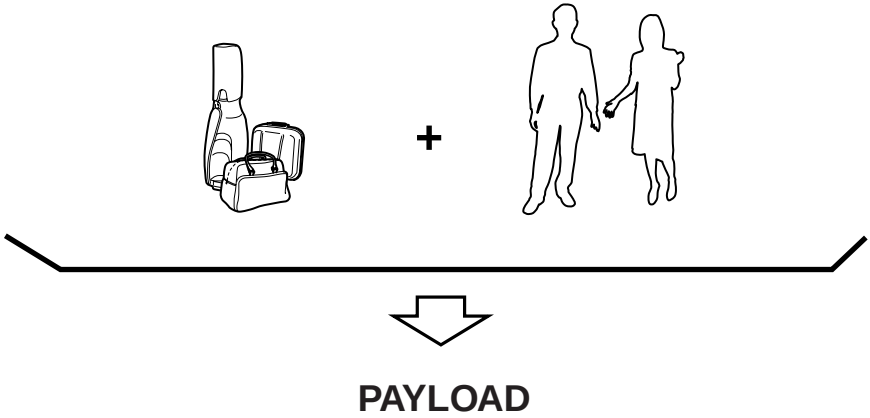

Payload is the combination weight of cargo and passengers that the vehicle is designed to carry. The maximum payload for your vehicle can be found on the Tire and Load Information label on the driver's door frame or door pillar. Look for “THE COMBINATION WEIGHT OF OCCUPANTS AND CARGO SHOULD NEVER EXCEED XXX kg or XXX lbs” for your maximum payload. The payload listed on the tire label is the maximum payload for the vehicle as built by the assembly plant. If any aftermarket or dealer installed equipment has been installed on the vehicle, the weight of the equipment must be subtracted from the payload listed on the tire label in order to be accurate.

SAMPLE

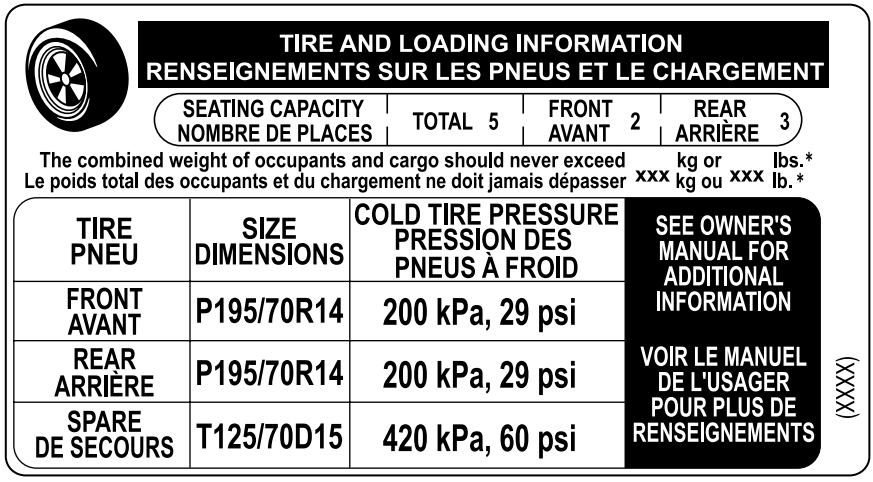

TIRE AND LOADING INFORMATION
RENSEIGNEMENTS SUR LES PNEUS ET LE CHARGEMENT

SEATING CAPACITY / NOMBRE DE PLACES	TOTAL 5	FRONT / AVANT 2	REAR / ARRIÈRE 3

The combined weight of occupants and cargo should never exceed xxx kg or xxx lbs.*
Le poids total des occupants et du chargement ne doit jamais dépasser xxx kg ou xxx lb.*

TIRE / PNEU	SIZE / DIMENSIONS	COLD TIRE PRESSURE / PRESSION DES PNEUS À FROID
FRONT / AVANT	P195/70R14	200 kPa, 29 psi
REAR / ARRIÈRE	P195/70R14	200 kPa, 29 psi
SPARE / DE SECOURS	T125/70D15	420 kPa, 60 psi

SEE OWNER'S MANUAL FOR ADDITIONAL INFORMATION

VOIR LE MANUEL DE L'USAGER POUR PLUS DE RENSEIGNEMENTS

(XXXX)

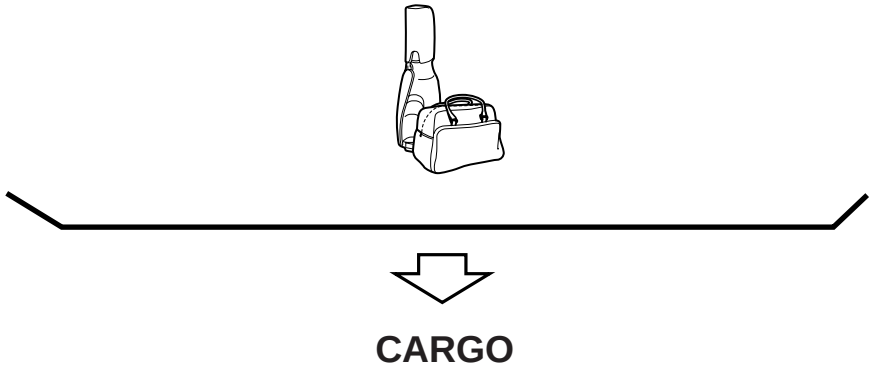

Cargo Weight includes all weight added to the Base Curb Weight, including cargo and optional equipment.

The cargo weight limit decreases depending on the number of vehicle occupants. The cargo weight limit can be calculated by subtracting the total weight of the vehicle occupants from the “combination weight of occupants and cargo should never exceed” value on the tire label.

Tire Information (U.S.A.)

Examples: Based on a single occupant weight of 68 kg (150 lbs), and a value of 385 kg (849 lbs) for the “combination weight of occupants and cargo should never exceed”:
The cargo weight limit with one occupant is 385 kg (849 lbs) – 68 kg (150 lbs) = 317 kg (699 lbs)
The cargo weight limit with two occupants is 385 kg (849 lbs) – (68 × 2) kg ((150 × 2) lbs) = 249 kg (549 lbs)
If the weight of the occupant increases, the cargo weight limit decreases by that much.

GAW (Gross Axle Weight) is the total weight placed on each axle (front and rear) - including vehicle curb weight and all payload.

GAWR (Gross Axle Weight Rating) is the maximum allowable weight that can be carried by a single axle (front or rear). **These numbers are shown on the Safety Compliance Certification Label located on the driver's door frame or door pillar. The total load on each axle must never exceed its GAWR.**

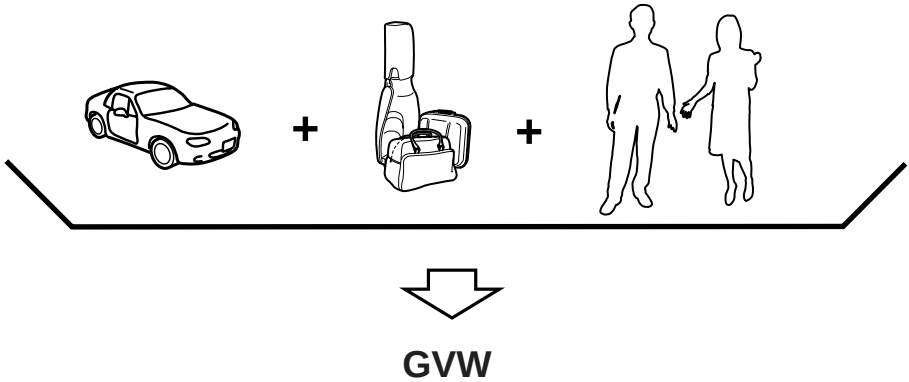

GVW (Gross Vehicle Weight) is the Vehicle Curb Weight + cargo + passengers.

GVWR (Gross Vehicle Weight Rating) is the maximum allowable weight of the fully loaded vehicle (including all options, equipment, passengers and cargo). **The GVWR is shown on the Safety Compliance Certification Label located on the driver's door frame or door pillar. The GVW must never exceed the GVWR.**

SAMPLE

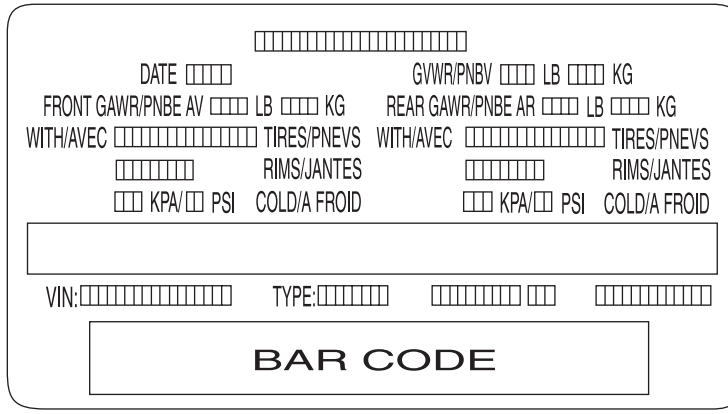

WARNING

Exceeding Axle Weight Rating Limits:

Exceeding the Safety Certification Label axle weight rating limits is dangerous and could result in death or serious injury as a result of substandard vehicle handling, performance, engine, transmission and/or structural damage, serious damage to the vehicle, or loss of control.

Always keep the vehicle within the axle weight rating limits.

Do not tow a trailer with this vehicle:

Towing a trailer with this vehicle is dangerous because it has not been designed to tow a trailer and doing so will affect the drive system which could result in vehicle damage.

Tire Information (U.S.A.)

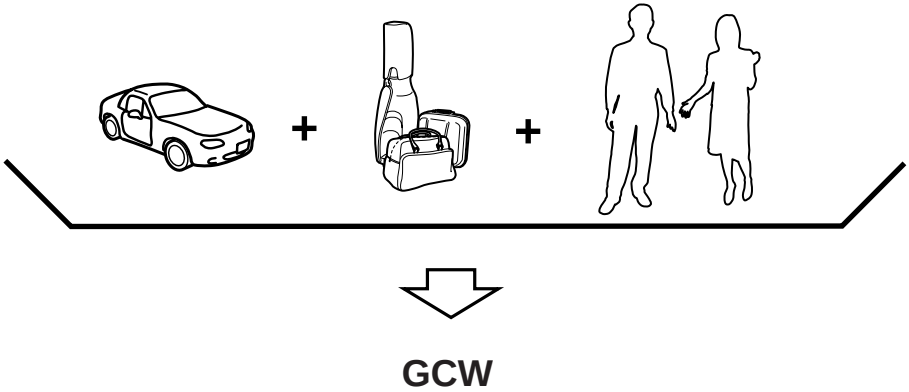

GCW (Gross Combination Weight) is the weight of the loaded vehicle (GVW).

GCWR (Gross Combination Weight Rating) is the maximum allowable weight of the vehicle - including all cargo and passengers - that the vehicle can handle without risking damage. **The GCW must never exceed the GCWR.**

⚠ WARNING

Exceeding GVWR or GAWR Specifications:

Exceeding the GVWR or the GAWR specified on the certification label is dangerous. Exceeding any vehicle rating limitation could result in a serious accident, injury, or damage to the vehicle.

Do not use replacement tires with lower load carrying capacities than the originals because they may lower the vehicle's GVWR and GAWR limitations. Replacement tires with a higher limit than the originals do not increase the GVWR and GAWR limitations.

Never exceed the GVWR or the GAWR specified on the certification label.

Steps for Determining the Correct Load Limit:

Steps for Determining Correct Load Limit:

(1) Locate the statement “The combined weight of occupants and cargo should never exceed XXX kg or XXX lbs” on your vehicle's placard.
(2) Determine the combined weight of the driver and passengers that will be riding in your vehicle.
(3) Subtract the combined weight of the driver and passengers from XXX kg or XXX lbs.
(4) The resulting figure equals the available amount of cargo and luggage load capacity. For example, if the “XXX” amount equals 1400 lbs. and there will be five 150 lb passengers in your vehicle, the amount of available cargo and luggage load capacity is 650 lbs. (1400 – 750 (5 × 150) = 650 lbs.)
(5) Determine the combined weight of luggage and cargo being loaded on the vehicle. That weight may not safely exceed the available cargo and luggage load capacity calculated in Step 4.
(6) If your vehicle will be towing a trailer, the load from your trailer will be transferred to your vehicle. Consult this manual to determine how this reduces the available cargo and luggage load capacity of your vehicle.

Reporting Safety Defects (U.S.A.)

If you believe that your vehicle has a defect which could cause a crash or could cause injury or death, you should immediately inform the National Highway Traffic Safety Administration (NHTSA) in addition to notifying Mazda Motor Corporation (Your Mazda Importer/Distributor).

If NHTSA receives similar complaints, it may open an investigation, and if it finds that a safety defect exists in a group of vehicles, it may order a recall and remedy campaign. However, NHTSA cannot become involved in individual problems between you, your dealer, or Mazda Motor Corporation (Your Mazda Importer/Distributor).

To contact NHTSA, you may call the Vehicle Safety Hotline toll-free at 1-888-327-4236 (TTY:1-800-424-9153) ; go to http://www.safercar.gov; or write to: Administrator, NHTSA, 1200 New Jersey Avenue, SE., Washington, DC, 20590. You can also obtain other information about motor vehicle safety from http://www.safercar.gov.

NOTE
If you live in the U.S.A., all correspondence to Mazda Motor Corporation should be forwarded to:

Mazda North American Operations
7755 Irvine Center Drive
Irvine, California 92618-2922
or
P.O. Box 19734
Irvine, CA 92623-9734
Customer Assistance Center or toll free at 1 (800) 222-5500

If you live outside of the U.S.A., please contact the nearest Mazda Distributor shown (page 9-12) in this booklet.

Reporting Safety Defects (Canada)

Canadian customers who wish to report a safety-related defect to Transport Canada, Defect Investigations and Recalls, may telephone the toll free hotline 1-800-333-0510, or contact Transport Canada by mail at: Transport Canada, ASFAD, Place de Ville Tower C, 330 Sparks Street, Ottawa ON K1A 0N5.

For additional road safety information, please visit the Road Safety website at: http://www.tc.gc.ca/roadsafety/menu.htm

Service Publications

Factory-authorized Mazda service publications are available for owners who wish to do some of their own maintenance and repair.

When requesting any of our publications through an Authorized Mazda Dealer, refer to the chart below.

If they do not have what you need in stock, they can order it for you.

PUBLICATION ORDER NUMBER	PUBLICATION DESCRIPTION
9999-95-042B-11	2011 WORKSHOP MANUAL (English)
9999-MX-042B-11	2011 WORKSHOP MANUAL (Spanish)
9999-95-026G-11	2011 WIRING DIAGRAM (English)
9999-MX-026G-11	2011 WIRING DIAGRAM (Spanish)
9999-95-031C-11 (U.S.A. only)	2011 OWNER'S MANUAL
9999-EC-031C-11 (Canada only)	2011 OWNER'S MANUAL
9999-PR-031C-11 (Puerto Rico, Mexico only)	2011 OWNER'S MANUAL
9999-95-MODL-11	2011 SERVICE HIGHLIGHTS

▼WORKSHOP MANUAL:

Covers recommended maintenance and repair procedures of the drive train, body and chassis.

▼WIRING DIAGRAM:

Provides electrical schematics as well as component location for the entire electrical system.

▼OWNER'S MANUAL:

This booklet contains information regarding the proper care and operation of your vehicle. This is not a technician's manual.

▼SERVICE HIGHLIGHTS:

Provides description and operation of the many systems of your Mazda.

10 Specifications

Technical information about your Mazda.

Identification Numbers 10-2
Vehicle Information Labels 10-2

Specifications 10-4
Specifications 10-4

Personalization Features 10-8
Personalization Features 10-8

Vehicle Information Labels

▼Vehicle Identification Number

The vehicle identification number legally identifies your vehicle. The number is on a plate attached to the cowl panel located on the left corner of the dashboard. This plate can easily be seen through the windshield.

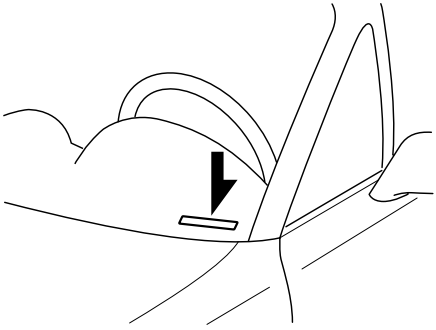

▼Motor Vehicle Safety Standard Label

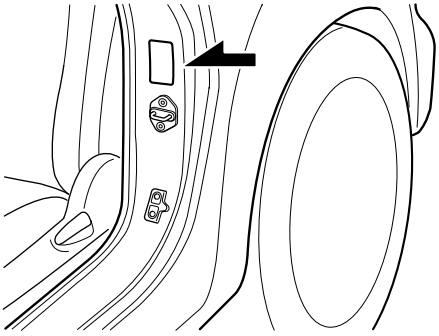

▼Chassis Number

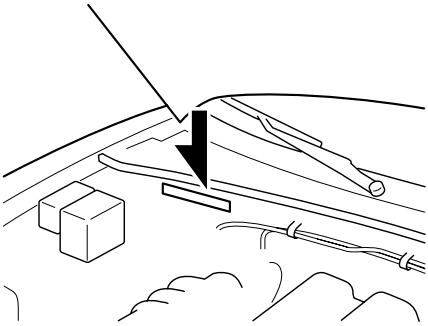

▼Vehicle Emission Control Information Label

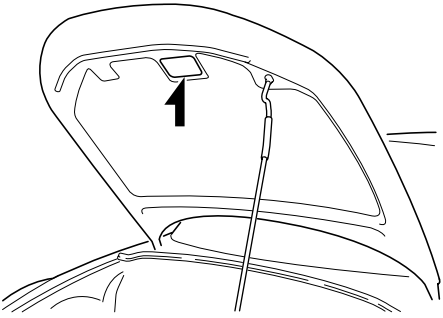

▼Tire Pressure Label

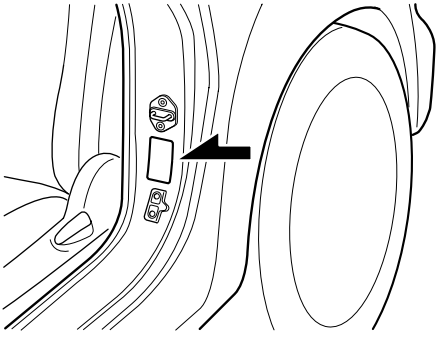

▼Engine Number

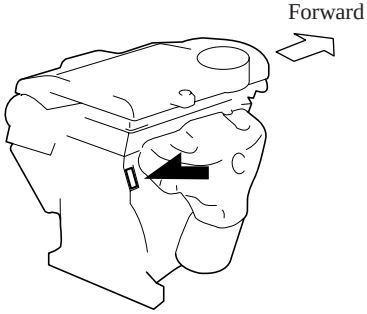

Specifications

▼Engine

Item	Specification
Type	DOHC-16V in-line, 4-cylinder
Bore×Stroke	87.5 × 83.1 mm (3.44 × 3.27 in)
Displacement	1,999 ml (1,999 cc, 122.0 cu in)
Compression ratio	10.8

▼Electrical System

Item	Classification
Battery	12V-36AH/5HR
Spark-plug number	L3G2 18 110*1, L3Y1 18 110
Spark-plug gap	1.25 1.35 mm (0.049 0.053 in)

*1 ex factory

⚠ CAUTION

When cleaning the iridium plugs, do not use a wire brush. The fine particulate coating on the iridium alloy and platinum tips could be damaged.

▼Lubricant Quality

Lubricant			Classification	
Engine oil			Refer to the recommended SAE viscosity numbers on page 8-18.	
Manual transmission oil	5-speed transmission	Any temperature	API Service	GL-4 or GL-5
			SAE	75W-90
		Above 10 °C (50 °F)	API Service	GL-4 or GL-5
			SAE	80W-90
	6-speed transmission		API Service	GL-4 or GL-5
			SAE	75W-90
Automatic transmission fluid			Mazda Genuine JWS3309	
Rear differential oil			API Service	GL-5
			SAE	90
				80W-90
				75W-90*1
Power steering fluid			Mazda Genuine ATF M-III or equivalent (e.g. Dexron® II)	
Brake/Clutch fluid			SAE J1703 or FMVSS116 DOT-3	

*1 Not available from Mazda

▼Capacities

(Approximate Quantities)

Item				Capacity
Engine oil	With oil filter replacement	U.S.A. and Canada	6-speed manual transmission	4.55 L (4.81 US qt, 4.00 Imp qt)
			Except 6-speed manual transmission	4.45 L (4.70 US qt, 3.92 Imp qt)
		Except U.S.A. and Canada		4.55 L (4.81 US qt, 4.00 Imp qt)
	Without oil filter replacement			4.05 L (4.28 US qt, 3.56 Imp qt)
Coolant	U.S.A. and Canada	5-speed manual transmission		7.3 L (7.7 US qt, 6.4 Imp qt)
		6-speed manual transmission		7.6 L (8.0 US qt, 6.7 Imp qt)
		Automatic transmission		7.2 L (7.6 US qt, 6.3 Imp qt)
	Except U.S.A. and Canada	6-speed manual transmission		7.6 L (8.0 US qt, 6.7 Imp qt)
		Automatic transmission		7.5 L (7.9 US qt, 6.6 Imp qt)
Manual transmission oil	5-speed transmission			2.0 L (2.1 US qt, 1.8 Imp qt)
	6-speed transmission			2.1 L (2.2 US qt, 1.8 Imp qt)
Automatic transmission fluid				7.4 L (7.8 US qt, 6.5 Imp qt)
Rear differential oil				0.7 L (0.7 US qt, 0.6 Imp qt)
Fuel tank				48.0 L (12.7 US gal, 10.6 Imp gal)

Check oil and fluid levels with dipsticks or reservoir gauges.

▼Dimensions

Item		Vehicle specification
Overall length	With license plate holder	4,032 mm (158.7 in)
	Without license plate holder	4,013 mm (158.0 in)
Overall width		1,720 mm (67.7 in)
Overall height	Soft top	1,245 mm (49.0 in)
	Hardtop	1,255 mm (49.4 in)
Front tread		1,490 mm (58.7 in)
Rear tread		1,495 mm (58.9 in)
Wheelbase		2,330 mm (91.7 in)

▼Weights

(Manual transmission)

Item		Weight	
		Without power retractable hardtop	With power retractable hardtop
GVWR (Gross Vehicle Weight Rating)		1,396 kg (3,078 lbs)	1,416 kg (3,122 lbs)
GAWR (Gross Axle Weight Rating)	Front	714 kg (1,574 lbs)	714 kg (1,574 lbs)
	Rear	682 kg (1,504 lbs)	702 kg (1,548 lbs)

(Automatic transmission)

Item		Weight	
		Without power retractable hardtop	With power retractable hardtop
GVWR (Gross Vehicle Weight Rating)		1,396 kg (3,078 lbs)	1,416 kg (3,122 lbs)
GAWR (Gross Axle Weight Rating)	Front	714 kg (1,574 lbs)	714 kg (1,574 lbs)
	Rear	693 kg (1,528 lbs)	702 kg (1,548 lbs)

▼Air Conditioner

Item	Classification
Refrigerant Type	HFC134a (R-134a)

▼Light Bulbs

Exterior light

Light bulb			Category	
			Wattage	ECE R (SAE)
Headlights	High beam		65	(H9)
	Low beam	Halogen	55	H7 (H7)
		Xenon fusion	35	D2S (D2S)
Front turn signal lights/Parking lights			28/8	(#7444NA)
Fog lights *			55	H11 (H11)
Front side-marker lights			5	( )
High-mount brake light			LED*1	( )
Rear turn signal lights			21	WY21W ( )
Brake lights/Taillights			21/5	W21/5W (#7443)
Reverse lights			18	W16W (#921)
License plate lights			5	W5W (4CP)
Rear side-marker lights			LED*1	( )

*1 LED is the abbreviation for Light Emitting Diode.

Interior light

Light bulb	Wattage
Overhead light	10
Trunk light	8

 *Some models.

▼Tires

NOTE

The tires have been optimally matched with the chassis of your vehicle.
When replacing tires, Mazda recommends that you replace tires of the same type originally fitted to your vehicle. For details, contact an Authorized Mazda Dealer.

Check the tire pressure label for tire size and inflation pressure. Refer to Tire Inflation Pressure on page 8-30.

Standard tire

Tire size	Inflation pressure	
	Front	Rear
205/50R16 87V	200 kPa (29 psi)	200 kPa (29 psi)
205/45R17 84W	200 kPa (29 psi)	200 kPa (29 psi)
205/45RF17 84W	200 kPa (29 psi)	200 kPa (29 psi)

▼Fuses

Refer to the fuse rating on page 8-44.

Personalization Features

The following “Personalization Features” are possible. These settings can only be changed by an Authorized Mazda Dealer.

Setting	Function	Initial Setting	After Setting Change
Advanced keyless entry	The advanced key's remaining battery level warning light in the instrument cluster can be deactivated.	Activated	Deactivated
	The beep sound which is heard when locking/unlocking both doors or the trunk lid can be deactivated.*1	Activated	Deactivated
	The function to automatically lock doors when leaving the vehicle while carrying the key can be activated.*2	Deactivated	Activated

*1 When the autolock function is operating, the warning sound will be heard regardless of the setting.
*2 When the autolock function is enabled, windows will not automatically close. You must close them before leaving vehicle.

11 Index

A

Accessory Socket 6-83
Add-On Non-Genuine Parts and Accessories 9-19
Advanced Key 3-2
    Advanced key maintenance 3-5
    Advanced key suspend function 3-18
    Auxiliary key 3-18
    Locking, unlocking with request switch 3-8
    Opening the trunk lid with request switch 3-10
    Operation range 3-7
    Remote control function 3-15
    Service 3-7
    When warning indicator/beep is activated 3-22
Air Bag Systems 2-30
Antenna 6-14
Anti-Lock Brake System (ABS) 5-9
    Warning light 5-9
Appearance Care 8-50
Audio System 6-14
    Audio control switch 6-56
    Audio set 6-25
    AUX mode 6-58
    Operating tips for audio system 6-15
    Safety certification 6-60
Automatic Transmission
    Direct mode 5-20
    Driving tips 5-21
    Manual shift mode 5-16
    Shift-lock system 5-16
    Transmission ranges 5-15
Average Fuel Economy Display 5-38

B

Battery
    Emergency starting 7-20
    Maintenance 8-27
    Specifications 10-4
Beep Sounds
    Ignition key reminder 5-55
    Lights-on reminder 5-55
    Seat belt warning 5-55
    Tire inflation pressure warning... 5-56
Before Starting the Engine 4-5
    After getting in 4-5
    Before getting in 4-5
Bluetooth Hands-Free 6-61
    Basic Bluetooth Hands-Free Operation 6-64
    Convenient Use of the Hands-Free System 6-68
    Hands-Free Telephone Setting.... 6-73
    Mazda Bluetooth Hands-Free Customer Service 6-79
    Safety certification 6-78
    When Bluetooth Hands-Free cannot be used 6-78
Body Lubrication 8-24
Brake/Clutch
    Fluid 8-22
Brakes
    Anti-lock brake system (ABS) 5-9
    Brakes assist 5-10
    Foot brake 5-6
    Pad wear indicator 5-11
    Parking brake 5-7
    Warning light 5-8
Break-In Period 4-6
Bulb Replacement 8-36

C

Capacities 10-5
Carbon Monoxide 4-4
Catalytic Converter 4-3
Cell Phones 9-20
Child Restraint
    Child restraint precautions 2-18
    Child-restraint system installation position 2-23
    LATCH child-restraint systems 2-27
Climate Control System 6-2
    Gas specifications 10-6
Convertible Top
    Power Retractable Hardtop 3-48
    Soft Top 3-43
Cruise Control 5-22
Cup Holder 6-81
Customer Assistance 9-2

D

Dashboard Illumination 5-41
Daytime Running Lights 5-58
Defroster
    Rear window 5-61
Dimensions 10-5
Door Locks 3-30
Driving In Flooded Area 4-10
Driving on Uneven Road 4-12
Driving Tips 4-6
    Automatic transmission 5-21
    Break-in period 4-6
    Driving in flooded area 4-10
    Driving on uneven road 4-12
    Hazardous driving 4-7
    Money-saving suggestions 4-6
    Rocking the vehicle 4-8
    Winter driving 4-9

D

Dynamic Stability Control (DSC) 5-27
    DSC OFF indicator light 5-28
    DSC OFF switch 5-28
    TCS/DSC Indicator light 5-27

E

Emergency Starting 7-20
    Flooded engine 7-20
    Jump-starting 7-21
    Push-starting 7-24
Emergency Towing 7-25
Emission Control System 4-3
Engine
    Coolant 8-20
    Exhaust gas 4-4
    Hood release 3-42
    Oil 8-18
    Overheating 7-18
    Starting 5-4
Engine Compartment Overview 8-17
Engine Coolant
    Overheating 7-18
Engine Coolant Temperature Gauge 5-40
Exhaust Gas 4-4
Exterior Care 8-52

F

Flasher
    Hazard warning 5-62
    Headlights 5-57

F

Flat Tire 7-3
Changing 7-13
Instant Mobility System (IMS) Emergency Flat Tire Repair Kit 7-7
Tool storage 7-5
Fluids
Classification 10-4
Owner maintenance 8-15
Fog Lights 5-59
Foot Brake 5-6
Fuel
Filler lid and cap 3-40
Gauge 5-40
Requirements 4-2
Tank capacity 10-5
Fuses 8-44
Panel description 8-47
Replacement 8-44

G

Glove Box 6-82

H

Hazard Warning Flasher 5-62
Hazardous Driving 4-7
Headlights
Control 5-57
Flashing 5-58
High-low beam 5-58
On reminder 5-58
HomeLink Wireless Control System 5-63
Hood Release 3-42
Horn 5-62

I

Ignition
Keys 3-23
Switch 5-2
Immobilizer System (with Advanced Key) 3-63
Immobilizer System (without Advanced Key) 3-67
Indicator Lights 5-42
Cruise 5-54
DSC OFF 5-54
Headlight high-beam 5-53
KEY 5-51
Security 5-53
Shift position 5-53
TCS/DSC 5-54
Turn-signal/hazard warning 5-55
Inside Trunk Release Lever 3-35
Instrument Cluster 5-37
Interior Care 8-57
Interior Lights 6-80

J

Jump-Starting 7-21

K

Keyless Entry System 3-24
Keys 3-23

L

Label Information 10-2
Lane-Change Signals 5-59
Light Bulbs
Replacement 8-36
Specifications 10-6
Lighting Control 5-57

L

Lubricant Quality 10-4

M

Maintenance
Introduction 8-2
Owner maintenance precautions 8-16
Owner maintenance schedule 8-15
Scheduled 8-3
Manual Transmission Operation 5-11
Recommendations for shifting.... 5-12
Mesh Pocket 6-83
Mirrors
Outside mirrors 3-73
Rearview mirror 3-74
Money-Saving Suggestions 4-6
Multi Pocket 6-81

O

Odometer and Trip Meter 5-38
Outside Mirrors 3-73
Outside Temperature Display 5-38
Overhead Lights 6-80
Overheating 7-18
Overloading 4-11

P

Paint Damage 8-50
Parking Brake 5-7
Parking in an Emergency 7-2
Personalization Features 10-8
Power Door Locks 3-31
Power Retractable Hardtop 3-48
Power Steering 5-22
Fluid 8-23

P

Power Windows 3-37
Push-Starting 7-24

R

Rear Window Defroster 5-61
Rearview Mirror 3-74
Recreational Towing 7-28
Registering Your Vehicle in A Foreign Country 9-18
Rocking the Vehicle 4-8

S

Safety Defects, Reporting 9-42
Seat Belt System
3-point type 2-11
Automatic locking 2-10
Belt minder 2-16
Caution label 2-12
Emergency locking 2-9
Extender 2-15
Pregnant women 2-9
Pretensioner and load limiting 2-13
Seat belt precautions 2-7
Warning light/beep 2-16
Seats 2-2
Seat warmer 2-5
Security System
Immobilizer system (with advanced key) 3-63
Immobilizer system (without advanced key) 3-67
Theft-deterrent system 3-71
Service Publications 9-44
Soft Top 3-43
Specifications 10-4
Speedometer 5-38

S

Starting the Engine 5-4
Steering Wheel 3-73
Horn 5-62
Storage Compartments 6-82
Back trim storage box 6-82
Glove box 6-82
Mesh pocket 6-83
Seat side box 6-82
Sunvisors 6-80

T

Tachometer 5-39
Theft-Deterrent System 3-71
Tiedown
Hook 7-26
Tire Information 9-23
Tire Pressure Monitoring System 5-30
System error activation 5-34
Tire pressure monitoring system warning light 5-32
Tires and wheels 5-35
Tires
Flat Tire 7-3
Inflation pressure 8-30
Replacement 8-32
Rotation 8-31
Snow tires 4-9
Specifications 10-7
Tire chains 4-10
Uniform tire quality grading system (UTQGS) 9-21
Tool 7-5
Tool Storage 7-5

T

Towing
Description 7-25
Emergency towing 7-25
Hook 7-26
Recreational towing 7-28
Trailer towing 4-13
Traction Control System (TCS) 5-26
TCS/DSC indicator light 5-26
Trailer Towing 4-13
Trip Meter 5-38
Trunk Lid 3-33
Inside trunk release lever 3-35
Trunk Light 6-80
Turn and Lane-Change Signals 5-59

V

Vanity Mirrors 6-80
Vehicle Information Labels 10-2

W

Warning Lights 5-42
ABS 5-44
Air bag system 5-46
Automatic transmission 5-48
Brake system 5-44
Charging system 5-45
Check engine 5-46
Door-ajar 5-48
Flat tire 5-51
KEY 5-51
Low fuel 5-47
Seat belt 5-47
Seat belt pretensioner system 5-46
Tire pressure monitoring system 5-49
Warranty 9-14

W

Washer Fluid 8-23
Weights 10-5
Wheel Replacement 8-33
Windblocker 6-84
Windows
    Power windows 3-37
Windshield Washer 5-61
Windshield Wipers 5-60
    Blades replacement 8-25
Winter Driving 4-9