mazda

2013 MAZDA CX-9

Owner's Manual

Image photo

8CN1

Form No. 8CN1-EC-12I (Part No. 9999-EC-011C-13)

北米　英/仏

Zoom-Zoom

All children instinctively know it.

A few adults still remember it.

One unique car company refuses to outgrow it.

In grown-up language, it means the exhilaration and

liberation that come from experiencing sheer motion.

But as usual, children put it much better and simply call it " Go Zoom-Zoom."

We practice it every day.

It's why we build the kind of cars we do.

Zoom-Zoom.

Can we re-awaken it in you today?

A Word to Mazda Owners

Thank you for choosing a Mazda. We at Mazda design and build vehicles with complete customer satisfaction in mind.

To help ensure enjoyable and trouble-free operation of your Mazda, read this manual carefully and follow its recommendations.

An Authorized Mazda Dealer knows your vehicle best. So when maintenance or service is necessary, that's the place to go.

Our nationwide network of Mazda professionals is dedicated to providing you with the best possible service.

We assure you that all of us at Mazda have an ongoing interest in your motoring pleasure and in your full satisfaction with your Mazda product.

Mazda Motor Corporation
HIROSHIMA, JAPAN

Important Notes About This Manual
Keep this manual in the glove box as a handy reference for the safe and enjoyable use of your Mazda. Should you resell the vehicle, leave this manual with it for the next owner.

All specifications and descriptions are accurate at the time of printing. Because improvement is a constant goal at Mazda, we reserve the right to make changes in specifications at any time without notice and without obligation.

Air Conditioning and the Environment
Your Mazda's genuine air conditioner is filled with HFC134a (R134a), a refrigerant that has been found not to damage the earth's ozone layer. If the air conditioner does not operate properly, consult an Authorized Mazda Dealer.

Perchlorate
Certain components of this vehicle such as [air bag modules, seat belt pretensioners, lithium batteries, ···] may contain Perchlorate Material- - Special handling may apply for service or vehicle end of life disposal. See
www.dtsc.ca.gov/hazardouswaste/perchlorate.

Please be aware that this manual applies to all models, equipment and options. As a result, you may find some explanations for equipment not installed on your vehicle.

©2012 Mazda Motor Corporation
Printed in Japan Dec. 2012 (Print2)

How to Use This Manual

We want to help you get the most driving pleasure from your vehicle. Your owner's manual, when read from cover to cover, can do that in many ways.

Illustrations complement the words of the manual to best explain how to enjoy your Mazda. By reading your manual, you can find out about the features, important safety information, and driving under various road conditions.

The symbol below in this manual means “Do not do this” or “Do not let this happen”.

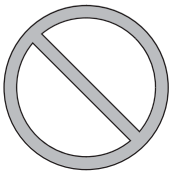

Index: A good place to start is the Index, an alphabetical listing of all information in your manual.

You'll find several WARNINGs, CAUTIONs, and NOTEs in the manual.

⚠ WARNING

A WARNING indicates a situation in which serious injury or death could result if the warning is ignored.

⚠ CAUTION

A CAUTION indicates a situation in which bodily injury or damage to your vehicle, or both, could result if the caution is ignored.

NOTE

A NOTE provides information and sometimes suggests how to make better use of your vehicle.

The symbol below, located on some parts of the vehicle, indicates that this manual contains information related to the part. Please refer to the manual for a detailed explanation.

Table of Contents

Your Vehicle at a Glance 1

Interior, exterior views and part identification of your Mazda.

Essential Safety Equipment 2

Use of safety equipment, including seats, seat belt system, child-restraint systems and SRS air bags.

Knowing Your Mazda 3

Explanation of basic operations and controls; opening/closing and adjustment of various parts.

Before Driving Your Mazda 4

Important information about driving your Mazda.

Driving Your Mazda 5

Explanation of instruments and controls.

Interior Comfort 6

Use of various features for drive comfort, including air-conditioning and audio system.

In Case of an Emergency 7

Helpful information on what to do in an emergency.

Maintenance and Care 8

How to keep your Mazda in top condition.

Customer Information and Reporting Safety Defects 9

Important consumer information including warranties and add-on equipment.

Specifications 10

Technical information about your Mazda.

Index 11

1 Your Vehicle at a Glance

Interior, exterior views and part identification of your Mazda.

Interior Overview **1-2**
Interior Equipment (View A) 1-2
Interior Equipment (View B) 1-3
Interior Equipment (View C) 1-4

Exterior Overview **1-5**
Front 1-5
Rear 1-6

Interior Equipment (View A)

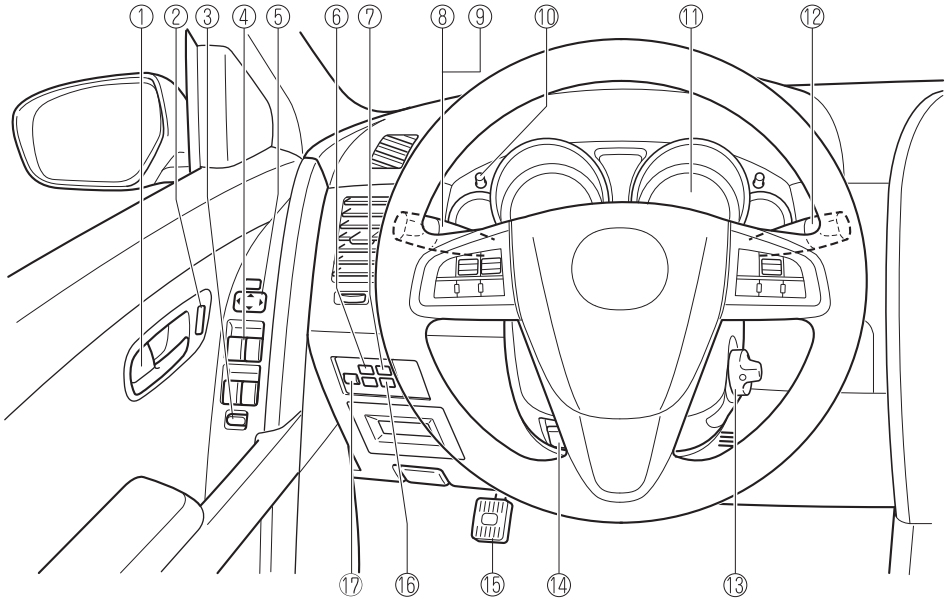

① Door-lock knob ..... page 3-29
② Power door lock switch ..... page 3-29
③ Power window lock switch ..... page 3-44
④ Power window switches ..... page 3-40
⑤ Outside mirror switch ..... page 3-64
⑥ TCS-OFF switch ..... page 5-23
⑦ Power liftgate switch ..... page 3-35
⑧ Lighting control ..... page 5-65
⑨ Turn and lane-change signal ..... page 5-71
⑩ Dashboard illumination knob ..... page 5-48
⑪ Instrument cluster ..... page 5-45
⑫ Wiper and washer lever ..... page 5-73
⑬ Ignition switch ..... page 5-2
⑭ Lock release lever ..... page 3-64
⑮ Parking brake ..... page 5-7
⑯ BSM OFF switch ..... page 5-37
⑰ Headlight leveling switch ..... page 5-70

Interior Equipment (View B)

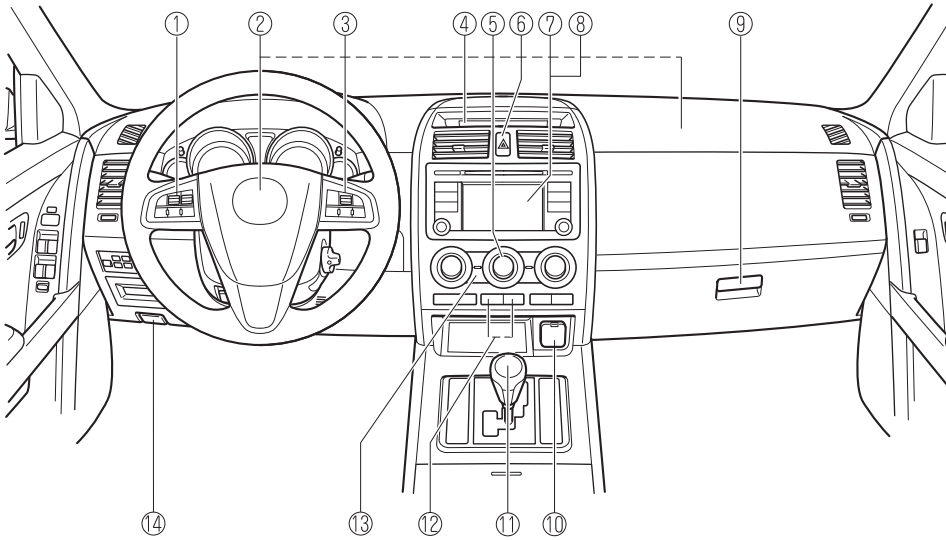

① Audio control switches ..... page 6-50
② SRS air bags ..... page 2-54
③ Cruise control switches ..... page 5-20
④ Information display ..... page 6-165
⑤ Climate control system ..... page 6-2
⑥ Hazard warning flasher switch ..... page 5-80
⑦ Navigation system (if equipped) ..... Refer to the separate manual
⑧ Audio system ..... page 6-17
⑨ Glove compartment ..... page 6-172
⑩ Accessory socket ..... page 6-175
⑪ AT shift lever ..... page 5-11
⑫ Seat warmer switches ..... page 2-17
⑬ Rear window defroster switch ..... page 5-78
⑭ Hood release handle ..... page 3-49

Interior Equipment (View C)

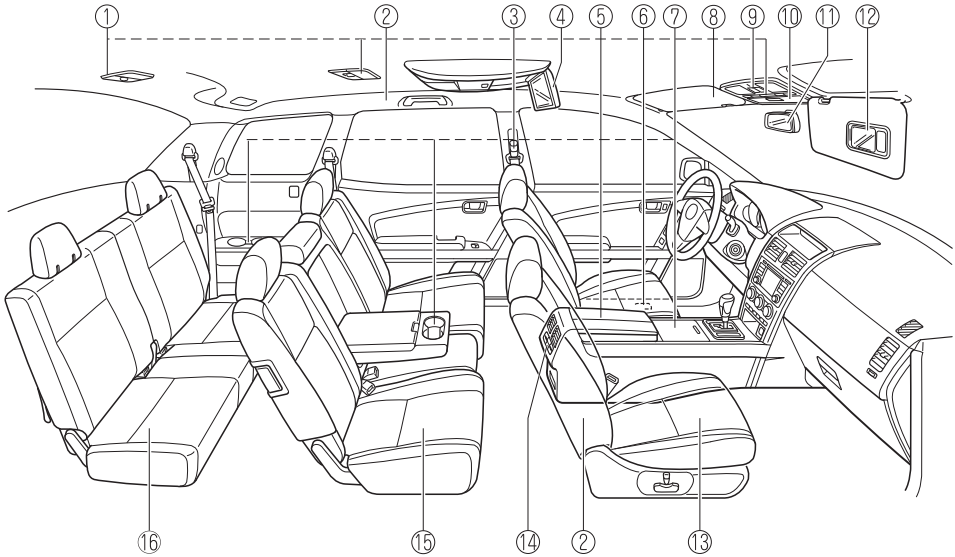

① Overhead lights ..... page 6-163
② SRS air bags ..... page 2-54
③ Seat belt ..... page 2-19
④ Rear entertainment system ..... page 6-64
⑤ Center console ..... page 6-173
⑥ Remote fuel-filler lid release ..... page 3-48
⑦ Cup holders ..... page 6-169
⑧ Sunvisor ..... page 6-162
⑨ Moonroof switches ..... page 3-51
⑩ Overhead console ..... page 6-172
⑪ Rearview mirror ..... page 3-66
⑫ Vanity mirror ..... page 6-162
⑬ Front seat ..... page 2-2
⑭ Climate control system (Rear) ..... page 6-14
⑮ Second-row seat ..... page 2-9
⑯ Third-row seat ..... page 2-13

 The equipment and installation position varies by vehicle

Exterior Overview

Front

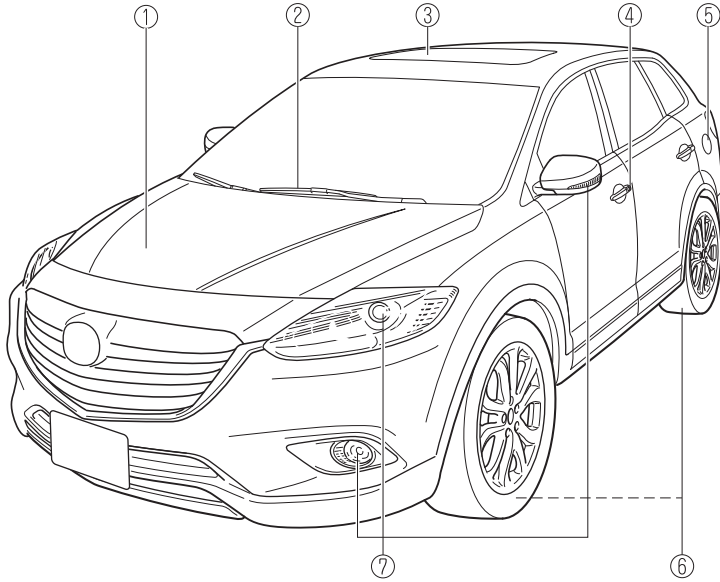

① Hood ..... page 3-49
② Windshield wiper blades ..... page 8-28
③ Moonroof ..... page 3-50
④ Door lock ..... page 3-28
⑤ Fuel-filler lid ..... page 3-47
⑥ Tires ..... page 8-34
⑦ Light bulbs ..... page 8-40

Exterior Overview

Rear

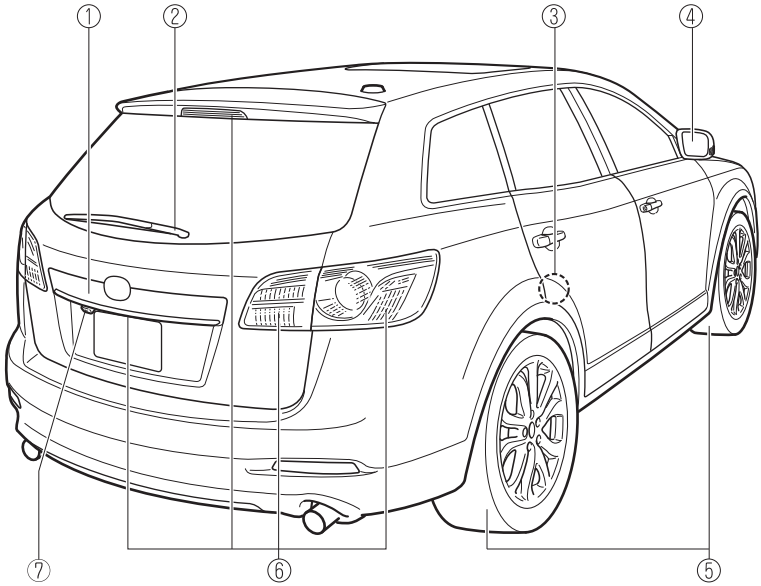

① Liftgate ..... page 3-33
② Rear wiper blade ..... page 8-30
③ Child safety lock ..... page 3-32
④ Outside mirror ..... page 3-64
⑤ Tires ..... page 8-34
⑥ Light bulbs ..... page 8-40
⑦ Rear view monitor ..... page 6-151

2 Essential Safety Equipment

Use of safety equipment, including seats, seat belt system, child-restraint systems and SRS air bags.

Seats 2-2
Front Seats (Manually Operated Seats) 2-2
Front Seats (Electrically Operated Seats) 2-4
Second-Row Seats 2-9
Third-Row Seat 2-13
Head Restraints 2-15
Seat Warmer* 2-17

Seat Belt Systems 2-19
Seat Belt Precautions 2-19
3-Point Type Seat Belt 2-23
Front Seat Belt Pretensioner and Load Limiting Systems 2-25
Center-Rear Position Seat Belt (Second-Row Seats) 2-28
Seat Belt Extender 2-32
Seat Belt Warning Light 2-33
Seat Belt Reminder 2-34

Child Restraint 2-35
Child Restraint Precautions 2-35
Child-Restraint System Installation Position 2-40
Installing Child-Restraint Systems 2-41
LATCH Child-Restraint Systems 2-49

SRS Air Bags 2-54
Supplemental Restraint System (SRS) Precautions 2-54
Supplemental Restraint System Components 2-60
How the SRS Air Bags Work 2-61
SRS Air Bag Deployment Criteria 2-65
Limitations to SRS Air Bag 2-66
Driver and Front Passenger Occupant Classification System* 2-68
Monitoring and Maintenance 2-73

*Some models.

Front Seats (Manually Operated Seats)

⚠ WARNING

Do not modify or replace the front seats:

Modifying or replacing the front seats such as replacing the upholstery or loosening any bolts is dangerous. The front seats contain air bag components essential to the supplemental restraint system. Such modifications could damage the supplemental restraint system and result in serious injury. Consult an Authorized Mazda Dealer if there is any need to remove or reinstall the front seats.

Do not drive with damaged front seats:

Driving with damaged front seats is dangerous. A collision, even one not strong enough to inflate the air bags, could damage the front seats which contain essential air bag components. If there was a subsequent collision, an air bag may not deploy which could lead to injuries. Always have an Authorized Mazda Dealer inspect the front seats, front seat belt pretensioners and air bags after a collision.

Make sure the adjustable components of a seat are locked in place:

Adjustable seats and seatbacks that are not securely locked are dangerous. In a sudden stop or collision, the seat or seatback could move, causing injury. Make sure the adjustable components of the seat are locked in place by attempting to slide the seat forward and backward and rocking the seatback.

Adjust the driver's seat only when the vehicle is stopped:

Adjusting the driver's seat while the vehicle is moving is dangerous. The driver could lose control of the vehicle and have an accident.

⚠ CAUTION

Be careful not to place your hands and fingers around moving parts of the front seat when adjusting the seat positions to prevent injury.

▼Seat Slide

To move a seat forward or backward, raise the lever and slide the seat to the desired position and release the lever.

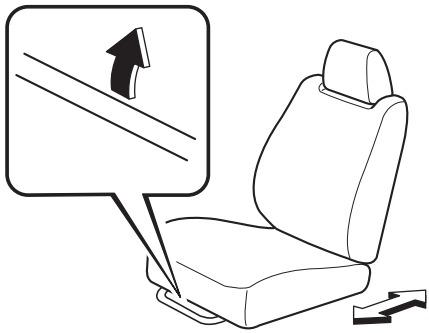

Make sure the lever returns to its original position and the seat is locked in place by attempting to push it forward and backward.

▼Seat Recline

⚠ WARNING

Do not drive with either front seat reclined:

Sitting in a reclined position while the vehicle is moving is dangerous because you do not get the full protection from seat belts. During sudden braking or a collision, you can slide under the lap belt and suffer serious internal injuries. For maximum protection, sit well back and upright.

Always sit in the front passenger seat properly with the seatback upright and feet on the floor (With Driver and Front Passenger Occupant Classification System):

Your front passenger seat has weight sensors, sitting in the front passenger seat improperly out of position or with the seatback reclined too far while the vehicle is moving is dangerous as it can take off weight from the seat bottom and affect the weight determination of the front passenger sensing system. As a result the front passenger will not have the supplementary protection of the air bag and seat belt pretensioner, which could result in serious injury. Always sit upright against the seatback with your feet on the floor.

Do not drive with the seatback unlocked:

All of the seatbacks play an important role in your protection in a vehicle. Leaving the seatback unlocked is dangerous as it can allow passengers to be ejected or thrown around and baggage to strike occupants in a sudden stop or collision, resulting in severe injury. After adjusting the seatback at any time, even when there are no other passengers, rock the seatback to make sure it is locked in place.

To change the seatback angle, lean forward slightly while raising the lever. Then lean back to the desired position and release the lever.

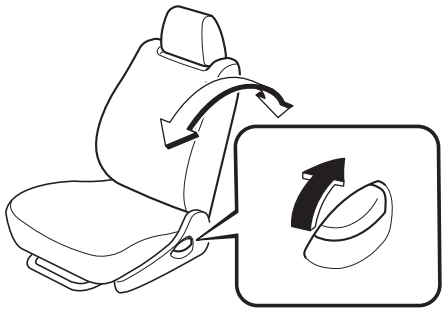

Make sure the lever returns to its original position and the seatback is locked in place by attempting to push it forward and backward.

CAUTION

When returning a rear-reclined seatback to its upright position, make sure you hold onto the seatback with your other hand while operating the lever. If the seatback is not supported, it will flip forward suddenly and could cause injury.

▼Height Adjustment (Driver's Seat)

To adjust the seat height, move the lever up or down.

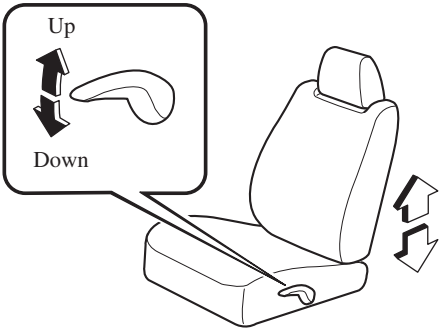

▼Lumbar Support Adjustment (Driver's Seat)

To increase the seat firmness, pull the lever forward. Push the lever backward to decrease firmness.

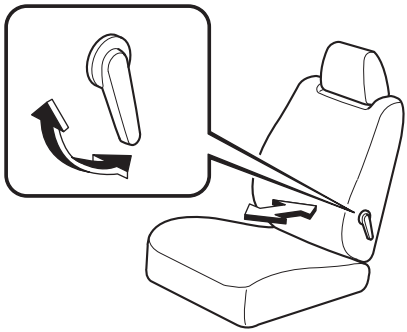

Front Seats (Electrically Operated Seats)

WARNING

Do not modify or replace the front seats:

Modifying or replacing the front seats such as replacing the upholstery or loosening any bolts is dangerous. The front seats contain air bag components essential to the supplemental restraint system. Such modifications could damage the supplemental restraint system and result in serious injury. Consult an Authorized Mazda Dealer if there is any need to remove or reinstall the front seats.

Do not drive with damaged front seats:

Driving with damaged front seats is dangerous. A collision, even one not strong enough to inflate the air bags, could damage the front seats which contain essential air bag components. If there was a subsequent collision, an air bag may not deploy which could lead to injuries. Always have an Authorized Mazda Dealer inspect the front seats, front seat belt pretensioners and air bags after a collision.

Adjust the driver's seat only when the vehicle is stopped:

Adjusting the driver's seat while the vehicle is moving is dangerous. The driver could lose control of the vehicle and have an accident.

CAUTION

- *The seat-bottom power adjustment is operated by motors. Avoid extended operation because excessive use can damage the motors.*
- *To prevent the battery from running down, avoid using the power adjustment when the engine is stopped. The adjuster uses a large amount of electrical power.*
- *Do not use the switch to make more than one adjustment at a time.*
- *Be careful not to place your hands and fingers around moving parts of the front seat when adjusting the seat positions to prevent injury.*

▼Seat Slide

To slide the seat, move the slide lifter switch on the outside of the seat to the front or back and hold it. Release the switch at the desired position.

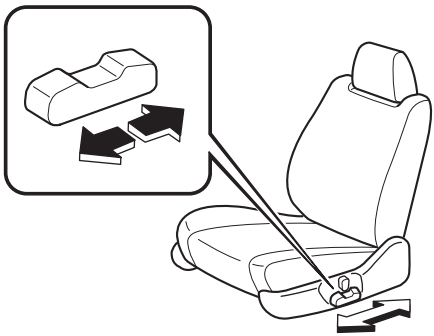

▼Seat Recline

WARNING

Do not drive with either front seat reclined:

Sitting in a reclined position while the vehicle is moving is dangerous because you do not get the full protection from seat belts. During sudden braking or a collision, you can slide under the lap belt and suffer serious internal injuries. For maximum protection, sit well back and upright.

Always sit in the front passenger seat properly with the seatback upright and feet on the floor (With Driver and Front Passenger Occupant Classification System):

Your front passenger seat has weight sensors, sitting in the front passenger seat improperly out of position or with the seatback reclined too far while the vehicle is moving is dangerous as it can take off weight from the seat bottom and affect the weight determination of the front passenger sensing system. As a result the front passenger will not have the supplementary protection of the air bag and seat belt pretensioner, which could result in serious injury. Always sit upright against the seatback with your feet on the floor.

To change the seatback angle, press the front or rear side of the reclining switch. Release the switch at the desired position.

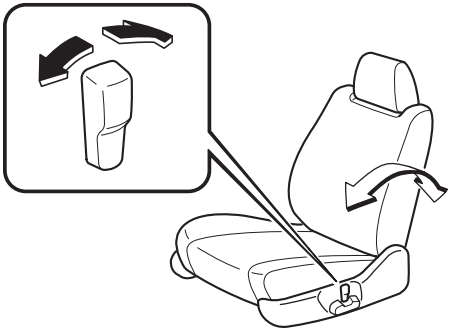

▼Height Adjustment (Driver's Seat)

To adjust the seat height, move the switch up or down.

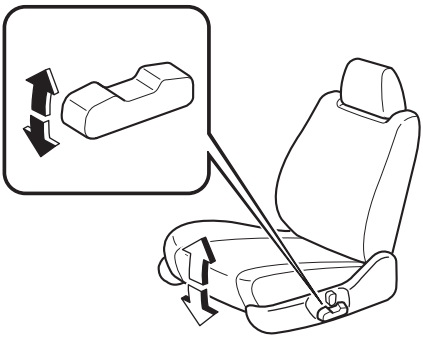

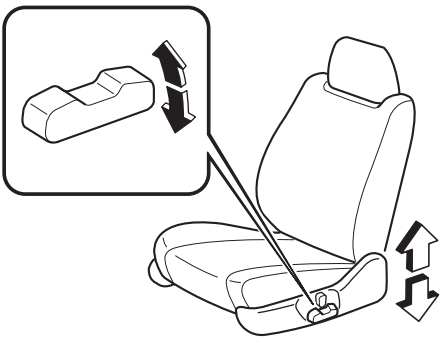

▼Seat Position Memory*

The driver's seat position memory function allows you to program a desired seat position and outside mirror angle position. The personalized positions can be easily activated with the simple touch of a button. The programmed positions can also be activated when unlocking the doors using a programmed advanced key/ retractable type key.
Seat positions and outside mirror angle positions for up to three people can be programmed into the memory using the three available programming buttons.

⚠ CAUTION

When activating the seat position, do not place your hands or fingers around the seat bottom. The seat moves to the desired position automatically, and if your hands or fingers are placed around the seat bottom, it could cause injury.

NOTE

- *Only operate the seat memory function while the vehicle is parked.*
- *Vehicle maintenance or other reasons requiring the vehicle battery to be disconnected will result in the seat position memory being erased.*
  In this case, re-program the seat positions.

Programming

1. Adjust the seat and outside mirror angle to the desired positions.
   For each seat position adjustment method refer to the following pages:
   Seat Slide (page 2-5)
   Seat Recline (page 2-5)
   Height Adjustment (page 2-6)
   Outside Mirrors (page 3-64)

*Some models.

2. Press the SET button followed by one of the programming buttons (1, 2, or 3) within about 5 seconds. A beep sound is heard after the programming is completed.

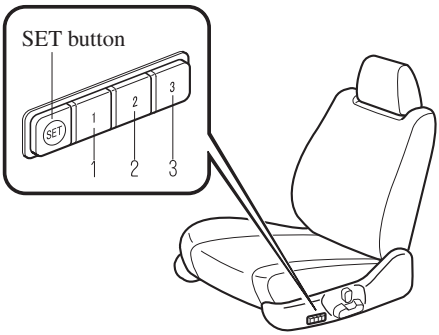

NOTE

If the programming button (1, 2, or 3) you have selected is already programmed, it will be overwritten with the new setting.

Activating the seat and outside mirrors to their pre-programmed positions

1. Shift the selector lever to the P position.
2. Press the programming button (1, 2, or 3) that you selected when programming your seat and outside mirror angle positions. A beep sound is heard after the adjustment to the programmed positions is completed.

NOTE

- *When the ignition is switched to ACC or off, a pre-programmed seat position can be activated regardless of the selector lever position.*
- *If the seat and outside mirror angles are already adjusted to the positions you are activating, the seat and outside mirrors do not move, however, a beep sound is heard to confirm that the adjustment operation is completed.*

Activating the seat and outside mirror angle positions when unlocking with an advanced key/retractable type key

Your desired seat and outside mirror angle positions can be activated when unlocking the doors. Perform the following procedure using the advanced key/retractable type key.

1. Adjust the seat and outside mirror angle to the desired positions.
2. Switch the ignition off.
3. Press the SET button next to the programming buttons and then the unlock button on the advanced key/retractable type key you want to program within about 5 seconds. A beep sound is heard when the operation is completed.

When the driver's door is unlocked using a programmed advanced key/retractable type key, the seat and outside mirror angles are activated to their programmed positions if the driver's door is opened within about 40 seconds. A beep sound is heard after the adjustment to the programmed positions is completed.

NOTE

- *If the seat and outside mirror angles are already adjusted to the positions you are activating, the seat and outside mirrors do not move (a beep sound is not heard).*
- *The advanced key/retractable key cannot be programmed while the key is inserted in the key cylinder.*
- *If any of the following operations is performed while activating a seat and outside mirror angle position, the activation will cancel (After pressing a programming button or unlocking the doors with a programmed advanced key/ retractable type key, and while the positions are being adjusted).*
  - *The selector lever is shifted to a position other than P (The ignition is switched ON).*
  - *Any of the seat adjustment switches other than a lumbar support switch are operated (Only the seat position activation is canceled).*
  - *The SET button is pressed.*
  - *A programming button (1, 2, or 3) is pressed.*
  - *Any of the power mirror buttons is operated (Only the outside mirror angle position activation is canceled).*
  - *Vehicle locking/unlocking is done using the transmitter.*
  - *The vehicle starts moving.*
- ***(To cancel the seat and outside mirror angle position activation when using a programmed advanced key/retractable type key to unlock the doors)***
  Perform the following procedure.
  - *Switch the ignition off.*
  - *Press the SET button next to the programming button (1, 2, or 3) and then the lock button on the advanced key/retractable type key within about 5 seconds. A beep sound is heard after the operation is completed.*

▼Lumbar Support Adjustment (Driver's Seat)

Manually operated

To increase the seat firmness, pull the lever forward. Push the lever backward to decrease firmness.

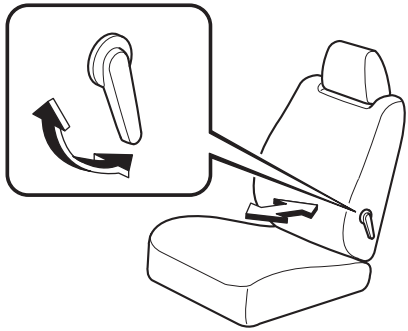

Electrically operated

The amount of lumbar support can be adjusted by pressing the switch.
To increase the seat firmness, press and hold the front part of the switch to the desired position, then release it.
Press the rear part of the switch to decrease firmness.

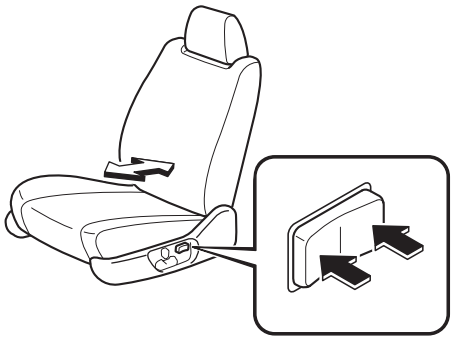

Second-Row Seats

WARNING

Do not stack cargo higher than the seatbacks:

Stacking luggage or other cargo higher than the seatbacks is dangerous. During a sudden stop or collision, objects can fly around and become projectiles that could hit and injure passengers.

Make sure luggage and cargo are secured before driving:

Not securing cargo while driving is dangerous as it could move or be crushed during sudden braking or a collision and cause injury.

Make sure the adjustable components of a seat are locked in place by attempting to slide the seat forward and backward and rocking the seatback:

Adjustable seats that are not securely latched are dangerous. In a sudden stop or collision, the seat or seatback could move, causing injury.

Adjust the seat only when the vehicle is stopped:

Adjusting the seat while the vehicle is moving is dangerous. Sudden braking or a collision could cause serious injury.

Do not drive with the seatback unlocked:

All of the seatbacks play an important role in your protection in a vehicle. Leaving the seatback unlocked is dangerous as it can allow passengers to be ejected or thrown around and baggage to strike occupants in a sudden stop or collision, resulting in severe injury. After adjusting the seatback at any time, even when there are no other passengers, rock the seatback to make sure it is locked in place.

Never allow a passenger to sit or stand on the folded seatback while the vehicle is moving:

Driving with a passenger on the folded seatback is dangerous. Allowing a child to sit up on the folded seatback while the vehicle is moving is particularly dangerous. In a sudden stop or even a minor collision, a child not in a proper seat or child-restraint system and seat belt could be thrown forward, back or even out of the vehicle resulting in serious injuries or death. The child in the baggage area could be thrown into other occupants and cause serious injury.

CAUTION

Be careful not to place your hands and fingers around moving parts of the second-row seat when adjusting the seat positions to prevent injury.

NOTE

The second-row seats cannot be removed.

▼Seat Slide

To move the seat forward or backward, raise the bar and slide the seat to the desired position and release the bar.

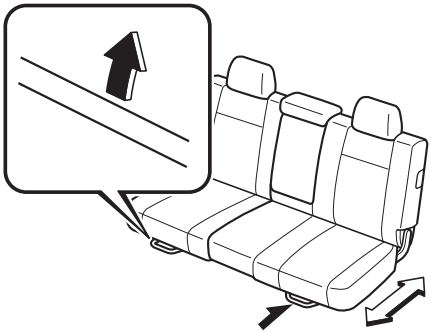

Make sure the bar returns to its original position and the seat is locked in place by attempting to push it forward and backward.

▼Seat Recline

⚠ WARNING

Do not drive with the seats reclined:
Sitting in a reclined position while the vehicle is moving is dangerous because you do not get the full protection from the seat belts. During sudden braking or a collision, you can slide under the lap belt and suffer serious internal injuries. For maximum protection, sit well back and upright.

Do not recline a second-row seatback when the third row seat is occupied:
Reclining the second-row seatback when the third-row seat is occupied is dangerous.Because the clearance in the third-row seat is limited, occupants in the third-row seat could be hurt seriously on a reclined second-row seatback.

To change the seatback angle, lean forward slightly while pulling the lever. Then lean back to the desired position and release the lever.

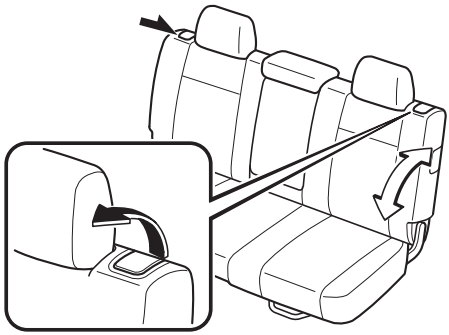

Make sure the lever returns to its original position and the seatback is locked in place by attempting to push it forward and backward.

⚠ CAUTION

When returning a rear-reclined seatback to its upright position, make sure you hold onto the seatback with your other hand while operating the lever. If the seatback is not supported, it will flip forward suddenly and could cause injury.

▼Armrest

The armrest can be used (no occupant in the center seat) or placed upright.

▼Third-Row Seat Access

After folding the second-row seat seatback and sliding the seat forward, you can access the third-row seat easily.

Entering/exiting the third-row seat area

Raise the lever on the side of the second-row seat to fold the seatback forward and slide the seat forward.

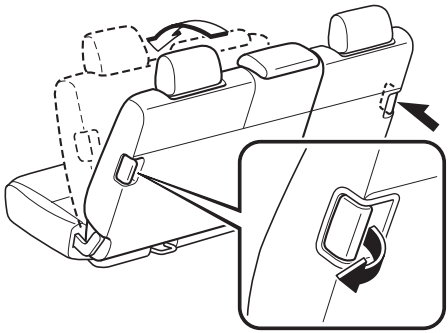

After entering/exiting the third-row seat area

1. Return the second-row seatback to its upright position and lock it after sliding it backward. Make sure it is locked by attempting to lightly move it forward and backward.
2. Make sure that the center-rear seat belt is routed properly (not under the head restraint) and the seat belt guide is snapped to the head restraint.

⚠ CAUTION

- *When folding a seatback, always hold onto the seatback with your other hand while operating the lever. If the seatback is not supported, it will flip forward suddenly and could cause injury.*
- *After entering/exiting the third-row seat area, return the seatback to its upright position. Otherwise, it could move unexpectedly and cause injury.*

▼Folding the Second-Row Seats

To create a flat luggage compartment space, fold the seatbacks forward.

Folding the seatbacks

1. Unfasten the lap portion of the center-rear seat belt (page 2-30) and stow it into the ceiling recess (page 2-30).

⚠ CAUTION

Always unfasten the lap portion of the belt before folding the rear-left seatback. Leaving the lap portion of the belt fastened could cause damage to the seat belt, buckle and seatback.

2. Slide the seat all the way back toward the rear of the vehicle.
3. Lower the head restraints all the way down (page 2-15).

NOTE

If the second-row seats cannot be folded because the head restraints for the second-row seats contact the front seats, remove the head restraints for the second-row seats.

4. Pull the lever and fold the seatback forward.

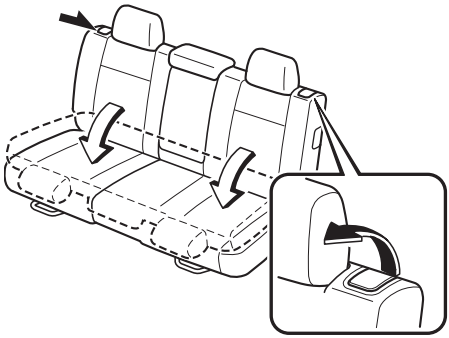

⚠ CAUTION

When folding a seatback, always hold onto the seatback with your other hand while operating the lever. If the seatback is not supported, it will flip forward suddenly and could cause injury.

NOTE

To create a flat luggage compartment space from the rear of the vehicle to the back of the front seats, fold the second-row and third-row seats (page 2-14).

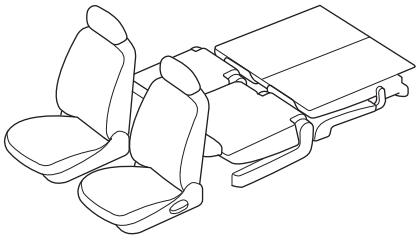

Returning seatbacks to their original positions

1. Lift the seatback to its original position.
   Make sure the seatback is secured by attempting to lightly move it forward and back.
2. If the head restraints were removed, re-install them.
3. Route the center-rear seat belt through the seat belt guide and fasten it. Check that all seat belts are routed properly for passenger use (page 2-28).

Third-Row Seat

WARNING

Do not stack cargo higher than the seatbacks:

Stacking luggage or other cargo higher than the seatbacks is dangerous. During a sudden stop or collision, objects can fly around and become projectiles that could hit and injure passengers.

Make sure luggage and cargo are secured before driving:

Not securing cargo while driving is dangerous as it could move or be crushed during sudden braking or a collision and cause injury.

Make sure the adjustable components of a seat are locked in place by attempting to rock the seatback:

Adjustable seats that are not securely latched are dangerous. In a sudden stop or collision, the seat or seatback could move, causing injury.

Do not drive with the seatback unlocked:

All of the seatbacks play an important role in your protection in a vehicle. Leaving the seatback unlocked is dangerous as it can allow passengers to be ejected or thrown around and baggage to strike occupants in a sudden stop or collision, resulting in severe injury. After returning the seatback at any time, even when there are no other passengers, rock the seatback to make sure it is locked in place.

Never allow a passenger to sit or stand on the folded seatback while the vehicle is moving:

Driving with a passenger on the folded seatback is dangerous. Allowing a child to sit up on the folded seatback while the vehicle is moving is particularly dangerous. In a sudden stop or even a minor collision, a child not in a proper seat or child-restraint system and seat belt could be thrown forward, back or even out of the vehicle resulting in serious injuries or death. The child in the baggage area could be thrown into other occupants and cause serious injury.

NOTE

The third-row seat cannot be removed.

▼Split-Folding the Third-Row Seat

To create a flat luggage compartment space, fold the seatbacks forward.

To fold third-row seat

1. **(With foldable head restraints)**
   Fold the head restraint all the way down.(page 2-15)
   (Without foldable head restraints)
   Lower the head restraints all the way down (page 2-15).
2. Pull the strap and fold the seatback forward.

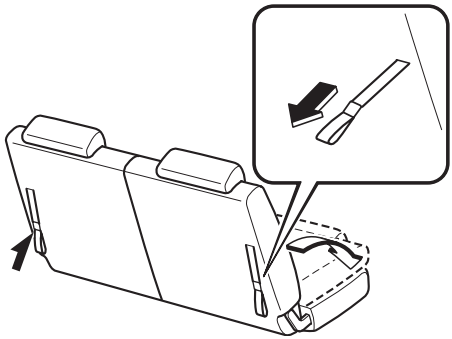

3. Fasten the strap to its original position.

NOTE

To create a flat luggage compartment space from the rear of the vehicle to the back of the front seats, fold the second-row and third-row seats (page 2-12).

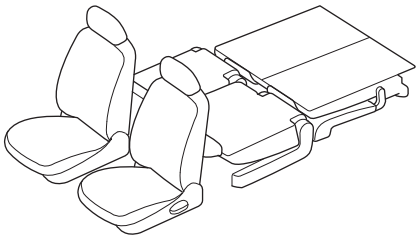

To return third-row seat to its original position

1. Return the seatback to its original position by pulling its strap.
   Make sure the seatback is secured by attempting to lightly move it forward and back.

2. Fasten the strap to its original position between the seatback and folding board.

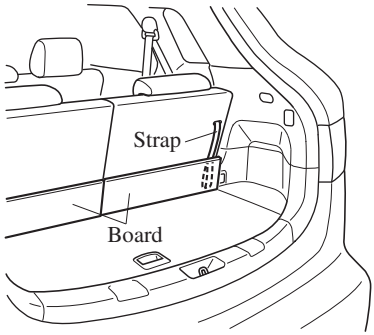

3. **(With foldable head restraints)**
   Lift the head restraint upward to its upright position.

Head Restraints

Your vehicle is equipped with head restraints on all outboard seats and the second-row center seat. The head restraints are intended to help protect you and the passengers from neck injury.

WARNING

Always drive with the head restraints installed when seats are being used and make sure they are properly adjusted. In addition, always raise the head restraints mentioned below when they are being used:

Driving with the head restraints adjusted too low or removed is dangerous. With no support behind your head, your neck could be seriously injured in a collision.

(Head restraints which must be raised for use)

- *Second-row center head restraint*
- *Third-row outboard head restraints except for foldable head restraints*

▼Normal Head Restraints

Height adjustment

To raise a head restraint, pull it up to the desired position.
To lower the head restraint, press the stop-catch release, then push the head restraint down.
Adjust the head restraint so that the center is even with the top of the passenger's ears.

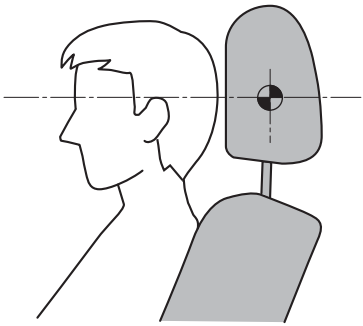

Front outboard seat

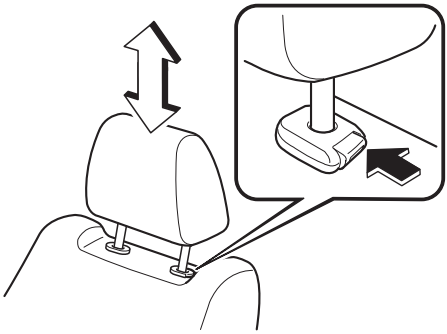

Second-Row outboard seat/Third-Row outboard seat

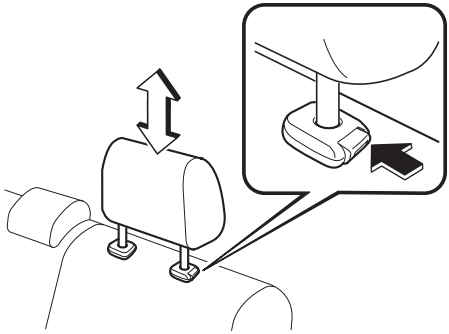

Second-Row center seat

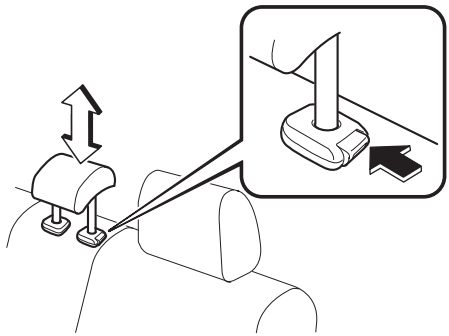

Removal/Installation

To remove the head restraint, pull it up while pressing the stop-catch.
To install the head restraint, insert the legs into the holes while pressing the stop-catch.

⚠ WARNING

Always drive with the head restraints set up when seats are being used and make sure they are properly set up:

Driving with the head restraints not set up is dangerous. With no support behind your head, your neck could be seriously injured in a collision.

▼Foldable Head Restraints*

The third-row seats are equipped with foldable head restraints.

NOTE
The foldable head restraints cannot be adjusted or removed.

To fold the head restraint, pull the strap and fold the head restraint downward. To return the head restraint to its upright position, lift it upward.

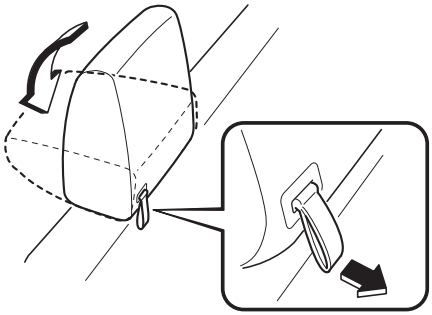

⚠ WARNING

Always drive with the head restraints in their upright positions when the third-row seats are occupied, and make sure they are securely locked in place:

Driving with the head restraints folded down is dangerous. With no support behind your head, your neck could be seriously injured in a collision.

Seat Warmer*

The front seats are electrically heated. The ignition must be switched ON.

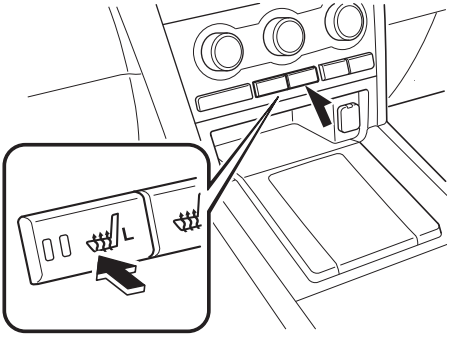

Press the seat warmer switch to illuminate the indicator light while the ignition is switched ON. The mode changes as follow each time the seat warmer switch is pressed.

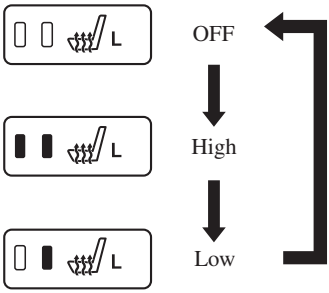

*Some models.

⚠ WARNING

- *Be careful when using the seat warmer. The heat from the seat warmer may be too hot for some people, as indicated below, and could cause a low-temperature burn.*
  - *Infants, small babies, elderly people, and physically challenged people*
  - *People with delicate skin*
  - *People who are excessively fatigued*
  - *People who are intoxicated*
  - *People who have taken sleep-inducing medicine such as sleeping pills or cold medicine*
- *Do not use the seat warmer with anything having high moisture-retention ability such as a blanket or cushion on the seat. The seat may be heated excessively and cause a low-temperature burn.*
- *Do not use the seat warmer even when taking a short nap in the vehicle. The seat may be heated excessively and cause a low-temperature burn.*
- *Do not place heavy objects with sharp projections on the seat, or insert needles or pins into it. This could cause the seat to become excessively heated and result in injury from a minor burn.*

⚠ CAUTION

Do not use organic solvents to clean the seat. It may damage the seat surface and the heater.

NOTE

- *If the ignition is switched off while the seat warmer is operating (High or Low) and then switched ON again, the seat warmer will automatically operate at the temperature set before switching off the ignition.*
- *Use the seat warmer when the engine is running, and do not continue to use it for a long period of time.*
- *The temperature of the seat warmer cannot be adjusted beyond High and Low because the seat warmer is controlled by a thermostat.*

Seat Belt Precautions

Seat belts help to decrease the possibility of severe injury during accidents and sudden stops. Mazda recommends that the driver and all passengers always wear seat belts.

Your vehicle has the following types of seat belts.

Seating Position		Types of seat belt
Front seat	Driver side	3-point type seat belt with emergency locking mode retractor
	Passenger side	3-point type seat belt with emergency locking mode retractor/automatic locking mode retractor
Second-row seat		
Third-row seat		

3-point type seat belt with emergency locking mode retractor
This belt has retractors with an inertia lock that keep the belt retracted when not in use. The lock allows the belt to remain comfortable on the user, but it will lock in position during a collision.
Refer to Emergency Locking Mode on page 2-21.
3-point type seat belt with emergency locking mode retractor/automatic locking mode retractor
In addition to the emergency locking mode function, this belt has retractors that operate in another mode, the automatic locking mode, for the child-restraint system.
Refer to Automatic Locking Mode on page 2-22.
Refer to Installing Child-Restraint Systems on page 2-41.
We recommend you put all children in the rear seats, if you must use the front passenger seat for a child, slide the front passenger seat as far back as possible and make sure any child-restraint system is secured properly.

WARNING

Always wear your seat belt and make sure all occupants are properly restrained:

Not wearing a seat belt is extremely dangerous. During a collision, occupants not wearing seat belts could hit someone or things inside the vehicle or even be thrown out of the vehicle. They could be seriously injured or even killed. In the same collision, occupants wearing seat belts would be much safer.

Do not wear twisted seat belts:

Twisted seat belts are dangerous. In a collision, the full width of the belt is not available to absorb the impact. This puts more force on the bones beneath the belt, which could cause serious injury or death. So, if your seat belt is twisted, you must straighten the seat belt to remove any twists and to allow the full width of the belt to be used.

Never use one seat belt on more than one person at a time:

Using one seat belt for more than one person at a time is dangerous. A seat belt used in this way cannot spread the impact forces properly and the two passengers could be crushed together and seriously injured or even killed. Never use one belt for more than one person at a time and always operate the vehicle with each occupant properly restrained.

Do not operate a vehicle with a damaged seat belt:

Using a damaged seat belt is dangerous. An accident could damage the belt webbing of the seat belt in use. A damaged seat belt cannot provide adequate protection in a collision. Have an Authorized Mazda Dealer inspect all seat belt systems in use during an accident before they are used again.

Have your seat belts changed immediately if the pretensioner or load limiter has been expended:

Always have an Authorized Mazda Dealer immediately inspect the front seat belt pretensioners and air bags after any collision. Like the air bags, the front seat belt pretensioners and load limiters will only function once and must be replaced after any collision that caused them to deploy. A seat belt with an expended pretensioner or load limiter is still better than wearing no seat belt at all; however, if the front seat belt pretensioners and load limiters are not replaced, the risk of injury in a collision will increase.

In a rollover crash, an unbelted person is significantly more likely to die than a person wearing a seat belt.

⚠ CAUTION

Belt retraction may become difficult if the belts and rings are soiled, so try to keep them clean. For more details about cleaning the seat belts, refer to "Cleaning the Lap/Shoulder Belt Webbing" (page 8-64).

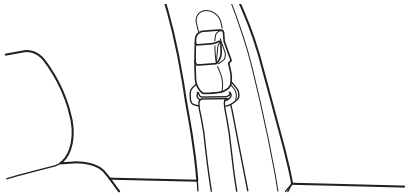

▼Pregnant Women and Persons with Serious Medical Conditions

Pregnant women should always wear seat belts. Ask your doctor for specific recommendations.
The lap belt should be worn SNUGLY AND AS LOW AS POSSIBLE OVER THE HIPS.
The shoulder belt should be worn across your shoulder properly, but never across the stomach area.
Persons with serious medical conditions also should wear seat belts. Check with your doctor for any special instructions regarding specific medical conditions.

▼Emergency Locking Mode

In the emergency locking mode, the belt remains comfortable on the occupant and the retractor will lock in position during a collision. When the seat belt is fastened, it will always be in the emergency locking mode until it is switched to automatic locking mode by pulling it all the way out to its full length. If the belt feels tight and hinders comfortable movement while the vehicle is stopped or in motion, it may be in the automatic locking mode because the belt has been pulled too far out. To return the belt to the more comfortable emergency locking mode, wait until the vehicle has stopped in a safe, level area, retract the belt fully to convert it back to emergency locking mode and then extend it around you again.
If the belt is locked and cannot be pulled out, retract the belt once, and then try pulling it out slowly. If this fails, pull the belt strongly one time and loosen, then pull it out again slowly.

▼Automatic Locking Mode

Always use the automatic locking mode to keep the child-restraint system from shifting to an unsafe position in the event of an accident. To enable seat belt automatic locking mode, pull it all the way out and connect it as instructed on the child-restraint system. It will retract down to the child-restraint system and stay locked on it. See the section on child restraint (page 2-35).

3-Point Type Seat Belt

▼Fastening the Seat Belt

1. Grasp the seat belt tongue.
2. Slowly pull out the lap/shoulder belt.

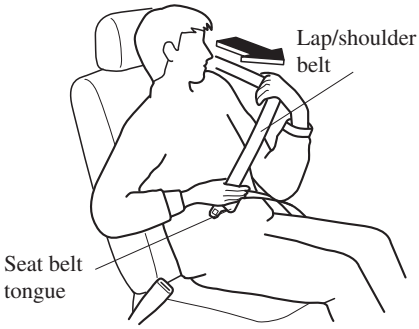

3. Insert the seat belt tongue into the seat belt buckle until you hear a click sound.

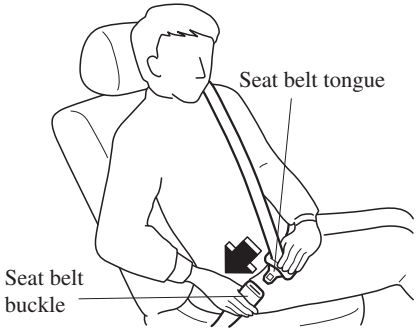

⚠ WARNING

Positioning the Shoulder Portion of the Seat Belt:

Improper positioning of the shoulder portion of the seat belt is dangerous. Always make sure the shoulder portion of the seat belt is positioned across your shoulder and near your neck, but never under your arm, on your neck, or on your upper arm.

4. Position the lap belt as low as possible, not on the abdominal area, then adjust the shoulder belt so that it fits snugly against your body.

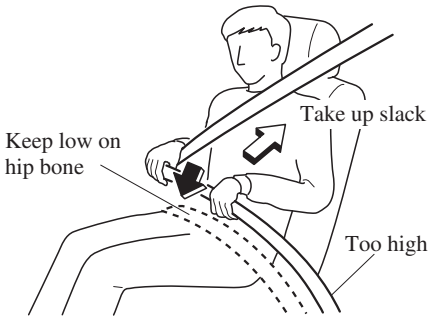

⚠ WARNING

Positioning the Lap Portion of the Seat Belt:

The lap portion of the seat belt worn too high is dangerous. In a collision, this would concentrate the impact force directly on the abdominal area, causing serious injury. Wear the lap portion of the belt snugly and as low as possible.

▼Unfastening the Seat Belt

Depress the button on the seat belt buckle. If the belt does not fully retract, pull it out and check for kinks or twists. Then make sure it remains untwisted as it retracts.

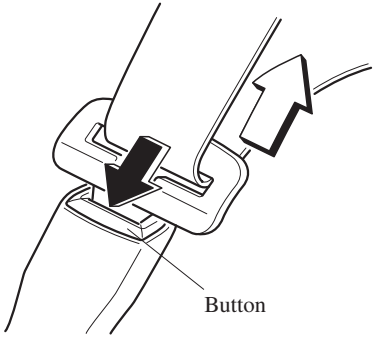

NOTE

- *When using the center-rear seat belt, refer to "Center-Rear Position Seat Belt" (page 2-28).*
- *If a belt does not fully retract, inspect it for kinks and twists. If it is still not retracting properly, have it inspected at an Authorized Mazda Dealer.*

To secure the outboard-third row seat belts when not in use, insert the belts into their seat belt retainers.

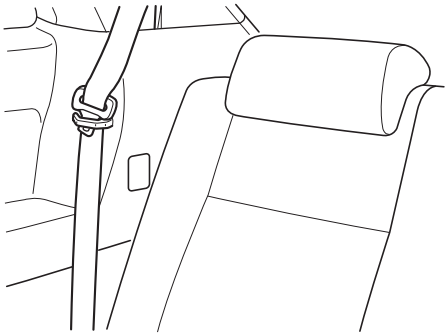

▼Front Shoulder Belt Adjuster

Adjust the height of the shoulder belt if the seat belt touches your neck, or if it crosses your arm instead of your shoulder. To raise the shoulder belt adjuster, push the adjuster up. To lower the shoulder belt adjuster, pull the adjuster and slide it down. Make sure the adjuster is locked.

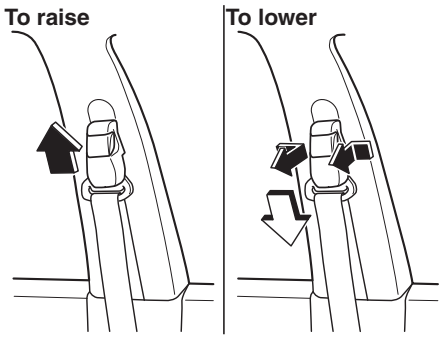

⚠ WARNING

Positioning the Shoulder Portion of the Seat Belt:

Improper positioning of the shoulder portion of the seat belt is dangerous. Always make sure the shoulder portion of the seat belt is positioned across your shoulder and near your neck, but never under your arm, on your neck, or on your upper arm.

Front Seat Belt Pretensioner and Load Limiting Systems

For optimum protection, the driver and front passenger seat belts are equipped with pretensioner and load limiting systems. For both these systems to work properly you must wear the seat belt properly.

Pretensioners:
The front seat belt retractors remove slack quickly as the air bags are expanding. Any time the air bags and seat belt pretensioners have deployed they must be replaced.
For deployment details, refer to the SRS Air Bag Deployment Criteria (page 2-65).
(With Driver and Front Passenger Occupant Classification System)
In addition, the pretensioner system for the front passenger, like the front passenger air bag, is designed to only deploy in accordance with the total seated weight on the front passenger seat. For details, refer to the driver and front passenger occupant classification system (page 2-68).

Load limiter:
The load limiting system releases belt webbing in a controlled manner to reduce belt force on the occupant's chest. While the most severe load on a seat belt occurs in frontal collisions, the load limiter has an automatic mechanical function and can activate in any accident mode with sufficient occupant movement.
Even if the pretensioners have not deployed, the load limiting function must be checked by an Authorized Mazda Dealer.

⚠ WARNING

Wear seat belts only as recommended in this owner's manual:
Incorrect positioning of the driver and front passenger seat belts is dangerous. Without proper positioning, the pretensioner and load limiting systems cannot provide adequate protection in an accident and this could result in serious injury. For more details about wearing seat belts, refer to "Fastening the seat belts" (page 2-23).

Have your seat belts changed immediately if the pretensioner or load limiter has been expended:
Always have an Authorized Mazda Dealer immediately inspect the front seat belt pretensioners and air bags after any collision. Like the air bags, the front seat belt pretensioners and load limiters will only function once and must be replaced after any collision that caused them to deploy. A seat belt with an expended pretensioner or load limiter is still better than wearing no seat belt at all; however, if the front seat belt pretensioners and load limiters are not replaced, the risk of injury in a collision will increase.

Do not modify the components or wiring, or use electronic testing devices on the pretensioner system:

Modifying the components or wiring of the pretensioner system, including the use of electronic testing devices is dangerous. You could accidentally activate it or make it inoperable which would prevent it from activating in an accident. The occupants or repairers could be seriously injured.

Properly dispose of the pretensioner system:

Improper disposal of the pretensioner system or a vehicle with non-deactivated pretensioners is dangerous. Unless all safety procedures are followed, injury could result. Ask an Authorized Mazda Dealer how to safely dispose of the pretensioner system or how to scrap a pretensioner-equipped vehicle.

NOTE

- *The pretensioner system will activate in a moderate or severe frontal, near-frontal collision or roll-over accident. It will not activate in most side or rear impacts.*
  (With Driver and Front Passenger Occupant Classification System)
  The pretensioner system for the front passenger is designed to only deploy in accordance with the total seated weight on the front passenger seat.
- *Some smoke (non-toxic gas) will be released when the air bags and pretensioners deploy. This does not indicate a fire. This gas normally has no effect on occupants, however, those with sensitive skin may experience light skin irritation. If residue from the deployment of the air bags or the front pretensioner system gets on the skin or in the eyes, wash it off as soon as possible.*

▼Air Bag/Front Seat Belt Pretensioner System Warning Light

If the air bag/front seat belt pretensioner system is working properly, the warning light illuminates when the ignition is switched ON or after the engine is cranked. The warning light turns off after a specified period of time.

A system malfunction is indicated if the warning light constantly flashes, constantly illuminates or does not illuminate at all when the ignition is switched ON. If any of these occur, consult an Authorized Mazda Dealer as soon as possible. The system may not operate in an accident.

WARNING

Never tamper with the air bag/ pretensioner systems and always have an Authorized Mazda Dealer perform all servicing and repairs:

Self-servicing or tampering with the systems is dangerous. An air bag/ pretensioner could accidentally activate or become disabled causing serious injury or death.

▼Air Bag/Front Seat Belt Pretensioner System Warning Beep

If a malfunction is detected in the air bag/ front seat belt pretensioner systems and the warning light, a warning beep sound will be heard for about 5 seconds every minute.

The air bag and seat belt pretensioner system warning beep sound will continue to be heard for approximately 35 minutes. Have your vehicle inspected at an Authorized Mazda Dealer as soon as possible.

WARNING

Do not drive the vehicle with the air bag/front seat belt pretensioner system warning beep sounding:

Driving the vehicle with the air bag/ front seat belt pretensioner system warning beep sounding is dangerous. In a collision, the air bags and the front seat belt pretensioner system will not deploy and this could result in death or serious injury.
Contact an Authorized Mazda Dealer to have the vehicle inspected as soon as possible.

Center-Rear Position Seat Belt (Second-Row Seats)

Before using the center-rear lap/shoulder belt make sure tongue (A) and anchor buckle (B) are fastened.

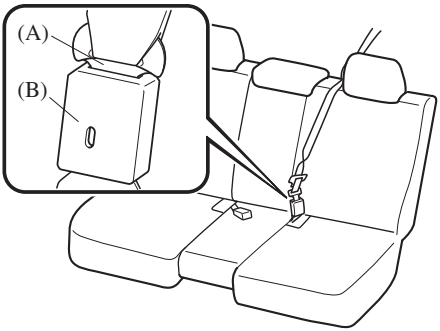

⚠ WARNING

Using the Seat Belt Guide:

Not using the seat belt guide is dangerous. If the seat belt guide is not used, the shoulder portion of the center-rear seat belt could be mistakenly positioned under the head restraint; a position that cannot provide adequate protection in a collision and could result in the center-rear passenger being seriously injured or killed. Always make sure the shoulder portion of the center-rear seat belt is on the right side of the left-rear head restraint and guided correctly through the seat belt guide.

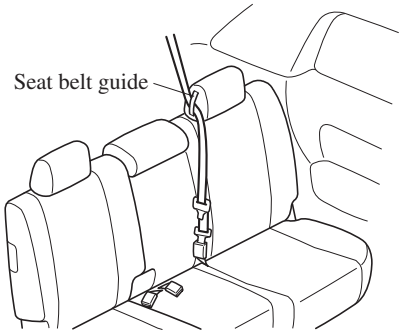

▼Fastening the Seat Belt

1. Grasp the seat belt tongue (C).
2. Slowly pull out the lap/shoulder belt.

3. Insert the seat belt tongue (C) into the seat belt buckle (D) until you hear a click sound.

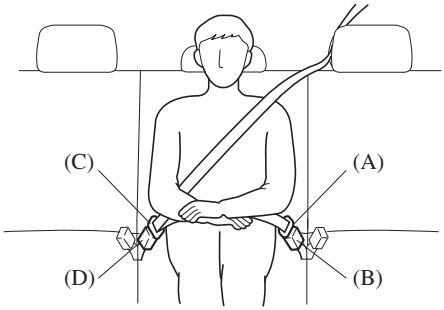

WARNING

Fastening the Center-Rear Seat Belt with Only One Buckle:

Fastening the center-rear seat belt with only one buckle is dangerous. If only one pair of seat belt tongues and buckles is fastened (either seat belt tongue (C) and seat belt anchor buckle (D) or seat belt tongue (A) and seat belt buckle (B)), then the seat belt cannot provide full protection. In a sudden stop or collision, the user could slide under the belt and suffer serious injuries. Always make sure that both pairs of seat belt tongues and buckles are fastened properly.

Positioning the Shoulder Portion of the Seat Belt:

Improper positioning of the shoulder portion of the seat belt is dangerous. Always make sure the shoulder portion of the seat belt is positioned across your shoulder and near your neck, but never under your arm, on your neck, or on your upper arm.

4. Position the lap belt as low as possible, not on the abdominal area, then adjust the shoulder belt so that it fits snugly against your body.

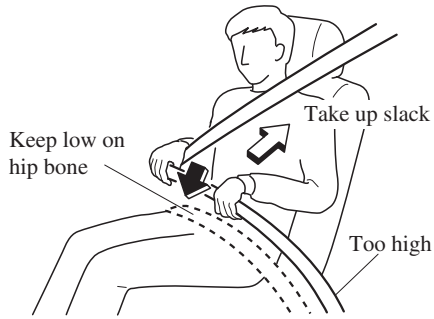

WARNING

Positioning the Lap Portion of the Seat Belt:

The lap portion of the seat belt worn too high is dangerous. In a collision, this would concentrate the impact force directly on the abdominal area, causing serious injury. Wear the lap portion of the belt snugly and as low as possible.

▼Unfastening the Seat Belt

Depress the button on the seat belt buckle. If the belt does not fully retract, pull it out and check for kinks or twists. Then make sure it remains untwisted as it retracts.

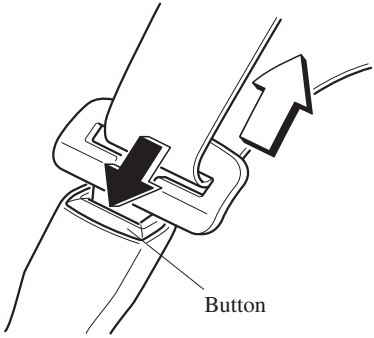

NOTE

If a belt does not fully retract, inspect it for kinks and twists. If it is still not retracting properly, have it inspected at an Authorized Mazda Dealer.

▼Retracting the Center Seat Belt (Middle Row) to Lower the Seatbacks for Carrying Cargo

To retract the center belt and lower the seatbacks for carrying cargo, insert a small object such as a key in the seat belt anchor buckle (B) slot.

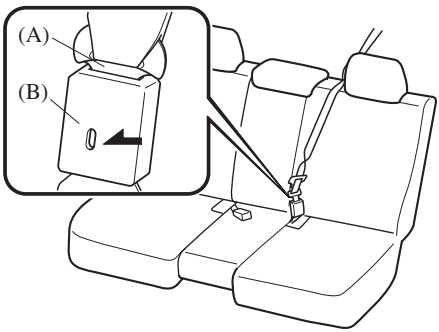

⚠ CAUTION

Always unfasten the lap portion of the belt before folding the left-rear seatback. Leaving the lap portion of the belt fastened could cause damage to the seat belt, seat belt buckle and seatback.

▼Stowing and pulling out the Center-Rear Position Seat Belt

The center-rear position seat belt can be stowed using the following procedure.

⚠ CAUTION

When stowing the seat belt, make sure the belt is locked securely into the recess. If the seat belt is not properly stowed, it might get caught in the seats and be damaged.

To stow the seat belt, retract the belt, put the seat belt tongues (A) and (C) together and insert each tongue into the respective ceiling recess. Insert the seat belt tongues until you hear a click sound.

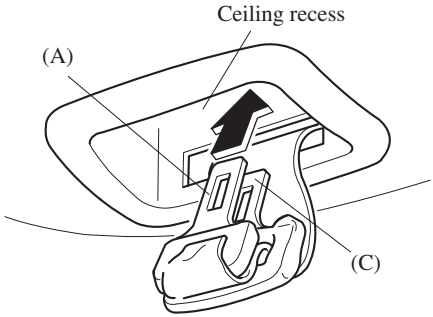

To pull out the seat belt, press the area indicated in the figure upward with your finger and slide the belt forward. Then slowly pull out the seat belt from the ceiling recess.

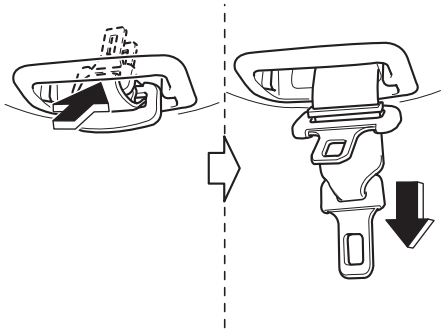

NOTE

- *To encourage rear seat passengers to wear their seat belts, we suggest leaving the center-rear lap position of the belt fastened at all times except when folding the rear seat forward.*
- *Pulling the seat belt all the way out will switch it to automatic locking mode. If automatic locking mode is not needed, retract the seat belt fully to convert it back to emergency locking mode.*

▼Re-attaching the Seat Belt after the Middle Row Seatbacks are Returned to their Upright Positions

To re-attach the center seat belt after the middle row seats are returned to their upright positions, grasp the seat belt tongue (A) and insert it into the seat belt anchor buckle (B) until you hear a click sound. It is now secure for passenger use.

NOTE

After returning the left-rear seatback to its upright position, guide the shoulder portion of the belt correctly through the seat belt guide and fasten the lap portion of the belt.

Seat Belt Extender

If your seat belt is not long enough, even when fully extended, a seat belt extender may be available to you at no charge from your Authorized Mazda Dealer.
This extender will be only for you and for the particular vehicle and seat. Even if it plugs into other seat belts, it may not hold in the critical moment of a crash.
When ordering an extender, only order one that provides the necessary additional length to fasten the seat belt properly.
Please contact your Authorized Mazda Dealer for more information.

WARNING

Do not use a seat belt extender unless it is necessary:

Using a seat belt extender when not necessary is dangerous. The seat belt will be too long and not fit properly. In an accident, the seat belt will not provide adequate protection and you could be seriously injured. Only use the extender when it is required to fasten the seat belt properly.

Do not use an improper extender:

Using a seat belt extender that is for another person or a different vehicle or seat is dangerous. The seat belt will not provide adequate protection and the user could be seriously injured in an accident. Only use the extender provided for you and for the particular vehicle and seat. NEVER use the extender in a different vehicle or seat. If you sell your Mazda, do not leave your seat belt extender in the vehicle. It could be used accidentally by the new owner of the vehicle. After removing the seat belt extender, discard it. Never use the seat belt extender in any other vehicle you may own in the future.

Do not use an extender that is too long:

Using an extender that is too long is dangerous. The seat belt will not fit properly. In an accident, the seat belt will not provide adequate protection and you could be seriously injured. Do not use the extender or choose one shorter in length if the distance between the extender's buckle and the center of the user's body is less than 15 cm (6 in).

Do not leave a seat belt extender connected to the buckle:

Leaving a seat belt extender connected to the buckle without using the seat belt is dangerous. When the seat belt extender is connected to the driver's seat belt buckle (or front passenger) seat, the SRS driver's (or front passenger's) air bag system will determine that the driver (or front passenger) is wearing the seat belt even if the driver (or front passenger) is not wearing it. This condition could cause the driver's (or front passenger's) air bag to not activate correctly and result in death or serious injury in the event of collision. Always wear the seat belt with the seat belt extender.

Do not use the seat belt extender when installing a child-restraint system on the front or rear passenger seat:

Using a seat belt extender to fasten a child-restraint system on any seat is dangerous. Always follow the child-restraint system manufacturer's installation instructions and never use a seat belt extender.

NOTE

When not in use, remove the seat belt extender and store it in the vehicle. If the seat belt extender is left connected, the seat belt extender might get damaged as it will not retract with the rest of the seat belt and can easily fall out of the door when not in use and be damaged. In addition, the seat belt warning light will not illuminate and function properly.

Seat Belt Warning Light

The seat belt warning light illuminates if the driver or front passenger's seat is occupied and the seat belt is not fastened when the ignition switched ON.

Seat Belt Reminder

NOTE

Consult an Authorized Mazda Dealer to deactivate or restore the belt reminder. Though the belt reminder can be deactivated, doing so will defeat the purpose of the system to warn the driver and the front passenger in the event that their seat belts are not fastened. For the safety of the driver and front passenger, Mazda recommends not deactivating the belt reminder.

If the vehicle is driven with the driver or front passenger's seat belt unfastened, the seat belt warning light illuminates and a warning chime sounds.
If the driver or front passenger's seat belt is unfastened (only when the front passenger seat is occupied) and the vehicle is driven at a speed faster than about 20 km/h (12 mph), the warning light will flash and a beep sound will be heard. After a short time, the warning light stops flashing, but remains illuminated, and the beep sound stops.

Until a seat belt is fastened or a given period of time has elapsed, the beep sound will not stop even if the vehicle speed falls below 20 km/h (12 mph).

NOTE

- *The warning light flashes and a beep sound will be heard for about 6 seconds if the driver's seat belt is not fastened when the ignition is switched ON.*
- *If a driver or front passenger's seat belt is unfastened after the beep sound turns off, and the vehicle speed exceeds 8 km/h (5 mph), the warning light flashes and beep sound activates again.*
- *Placing items on the front passenger seat may cause the front passenger seat belt warning function to operate depending on the weight of the item.*
- *To allow the front passenger seat weight sensor to function properly, do not place and sit on an additional seat cushion on the front passenger seat. The sensor may not function properly because the additional seat cushion could cause sensor interference.*
- *When a small child sits on the front passenger seat, it is possible that the warning light will not operate.*

Child Restraint Precautions

Mazda strongly urges the use of child-restraint systems for children small enough to use them.

You are required by law to use a child-restraint system for children in the U.S. and Canada. Check your local and state or provincial laws for specific requirements regarding the safety of children riding in your vehicle.

Whatever child-restraint system you consider, please pick the appropriate one for the age and size of the child, obey the law and follow the instructions that come with the individual child-restraint system.

A child who has outgrown child-restraint systems should sit in the rear and use seat belts, both lap and shoulder. If the shoulder belt crosses the neck or face, move the child closer to the center of the vehicle in the outboard seats, and towards the buckle on the right if the child is seated on the center seat.

Statistics confirm that the rear seats are the best place for all children up to 12 years of age, and more so with a supplemental restraint system (air bags).

A rear-facing child-restraint system should **NEVER** be used on the front seat with the air bag system activated. The front passenger's seat is also the least preferred seat for other child-restraint systems.

(With Driver and Front Passenger Occupant Classification System)
To reduce the chance of injuries caused by deployment of the front passenger air bag, the front passenger seat weight sensors work as a part of the supplemental restraint system. This system deactivates the front passenger front and side air bags and also the front passenger seat belt pretensioner system when the front passenger air bag deactivation indicator light illuminates.

When an infant or small child sits on the front passenger seat, the system shuts off the front passenger front and side air bags and seat belt pretensioner system, so make sure the front passenger air bag deactivation indicator light illuminates.

Even if the front passenger air bag is shut off, Mazda strongly recommends that children be properly restrained and child-restraint systems of all kinds are properly secured on the rear seats which are the best place for children.

For more details, refer to “Front passenger seat weight sensors” (page 2-68).

WARNING

Use the correct size child-restraint system:

For effective protection in vehicle accidents and sudden stops, a child must be properly restrained using a seat belt or child-restraint system depending on age and size. If not, the child could be seriously injured or even killed in an accident.

Follow the manufacturer's instructions and always keep the child-restraint system buckled down:

An unsecured child-restraint system is dangerous. In a sudden stop or a collision it could move causing serious injury or death to the child or other occupants. Make sure any child-restraint system is properly secured in place according to the child-restraint system manufacturer's instructions. When not in use, remove it from the vehicle or fasten it with a seat belt, or latch it down to BOTH LATCH lower anchors for LATCH child-restraint systems and the corresponding tether anchor.

Always secure a child in a proper child-restraint system:

Holding a child in your arms while the vehicle is moving is extremely dangerous. No matter how strong the person may be, he or she cannot hold onto a child in a sudden stop or collision and it could result in serious injury or death to the child or other occupants. Even in a moderate accident, the child may be exposed to air bag forces that could result in serious injury or death to the child, or the child may be slammed into an adult, causing injury to both child and adult.

Never use a rear-facing child-restraint system in the front seat with an air bag that could deploy:

Rear-facing child-restraint systems on the front seat are particularly dangerous even though you may feel assured that a front passenger air bag will not deploy based on the fact that the front passenger air bag deactivation indicator light illuminates. The child-restraint system can be hit by a deploying air bag and moved violently backward resulting in serious injury or death to the child.

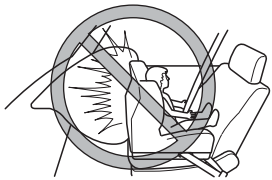

Vehicles with a front passenger air bag have a warning label attached as shown below. The warning label reminds you not to put a rear-facing child-restraint system on the front passenger seat at any time.

Do not install a front-facing child-restraint system on the front passenger seat unless it is unavoidable:

In a collision, the force of a deploying air bag could cause serious injury or death to the child. If installing a front-facing child-restraint system on the front passenger seat is unavoidable, move the front passenger seat as far back as possible.

Seating a child in a child-restraint system on the front passenger seat is dangerous under certain conditions (With Driver and Front Passenger Occupant Classification System):

Your vehicle is equipped with front passenger seat weight sensors. Even with the front passenger seat weight sensors, if you must use the front passenger seat to seat a child, using a child-restraint system on the front passenger seat under the following conditions increases the danger of the front passenger air bag deploying and could result in serious injury or death to the child.

- *The front passenger air bag deactivation indicator light does not illuminate when seating a child in the child-restraint system.*
- *Luggage or other items are placed on the seat with the child in the child-restraint system.*
- *A rear passenger or luggage pushing or pulling down on the front passenger seatback.*
- *A rear passenger puts their feet on the front seat rails.*
- *Luggage or other items are placed on the seatback or hung on the head restraint.*
- *Heavy items are placed in the seatback map pocket.*
- *The seat is washed.*
- *Liquids are spilled on the seat.*
- *The front passenger seat is moved backward, pushing into luggage or other items placed behind it.*
- *The front passenger seatback contacts the second-row seat.*
- *Luggage or other items are placed between the front passenger seat and driver seat.*
- *Any accessories, which might increase the total seated weight on the front passenger seat, are attached to the front passenger seat.*

The designated positions with seat belts on the rear seats are the safest places for children. Always use seat belts and child restraints.

Do not allow a child or anyone to lean over or against the side window of a vehicle with side and curtain air bags:

It is dangerous to allow anyone to lean over or against the side window, the area of the front passenger seat, the front and rear window pillars and the roof edge along both sides from which the side and curtain air bags deploy, even if a child-restraint system is used. The impact of inflation from a side or curtain air bag could cause serious injury or death to an out of position child. Furthermore, leaning over or against the front door could block the side and curtain air bags and eliminate the advantages of supplemental protection. With the front air bag and the additional side air bag that comes out of the front seat, the rear seat is always a better location for children. Take special care not to allow a child to lean over or against the side window, even if the child is seated in a child-restraint system.

Never use one seat belt on more than one person at a time:

Using one seat belt for more than one person at a time is dangerous. A seat belt used in this way cannot spread the impact forces properly and the two passengers could be crushed together and seriously injured or even killed. Never use one belt for more than one person at a time and always operate the vehicle with each occupant properly restrained.

⚠ CAUTION

A seat belt or child-restraint system can become very hot in a closed vehicle during warm weather. To avoid burning yourself or a child, check them before you or your child touches them.

NOTE

Your Mazda is equipped with LATCH lower anchors for attachment of specially designed LATCH child-restraint systems in the rear seats. When using these anchors to secure a child-restraint system, refer to "LATCH Child-Restraint Systems" (page 2-49).

Child-Restraint System Installation Position

In this owner's manual, explanation of child-restraint systems is provided for the following three types of popular child-restraint systems: infant seat, child seat, booster seat.

NOTE

- *Installation position is determined by the type of child-restraint system. Always read the manufacturer's instructions and this owner's manual carefully.*
- *Due to variations in the design of child-restraint systems, vehicle seats and seat belts, all child-restraint systems may not fit all seating positions. Before purchasing a child-restraint system, it should be tested in the specific vehicle seating position (or positions) where it is intended to be used. If a previously purchased child-restraint system does not fit, you may need to purchase a different one that will.*

Infant seat
An infant seat provides restraint by bracing the infant's head, neck and back against the seating surface.

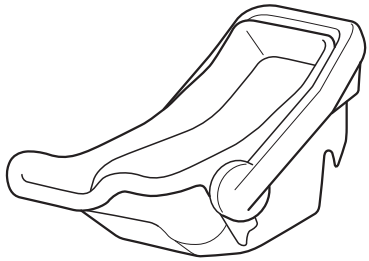

Child seat
A child seat restrains a child's body using the harness.

Booster seat
A booster seat is a child restraint accessory designed to improve the fit of the seat belt system around the child's body.

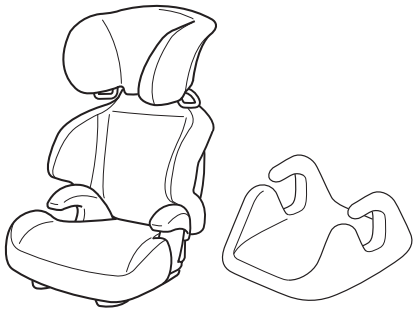

Installing Child-Restraint Systems

Accident statistics reveal that a child is safer in the rear seats. The front passenger's seat is clearly the worst choice for any child under 12, and with rear-facing child-restraint systems it is clearly unsafe due to air bags.

NOTE
Even if your vehicle is equipped with front passenger seat weight sensors (page 2-68), which automatically deactivates the front passenger air bag, a rear seat is the safest place for a child of any age or size.

Some child-restraint systems now come with tethers and therefore must be installed on the seats that take tethers to be effective. In your Mazda, tethered child-restraint systems can only be accommodated in the three positions on the second-row seats.

Some child-restraint systems also employ specially designed LATCH attachments; refer to “LATCH Child-Restraint Systems” (page 2-49).

⚠ WARNING

Tethered Child-Restraint Systems Work Only on Tether-Equipped Rear Seats:
Installation of a tether equipped child-restraint system in the front passenger's seat or the third-row seats defeats the safety design of the system and will result in an increased chance of serious injury if the child-restraint system goes forward without benefit of being tethered. Place tether equipped child-restraint systems where there are tether anchors.

▼Second-Row Seats Child-Restraint System Installation

Follow these instructions when using a child-restraint system, unless you are attaching a LATCH-equipped child-restraint system to the rear LATCH lower anchors. Refer to “LATCH Child-Restraint Systems” (page 2-49).

NOTE
Follow the child-restraint system manufacturer's instructions carefully. If you are not sure whether you have a LATCH system or tether, check in the child-restraint system manufacturer's instructions and follow them accordingly. Depending on the type of child-restraint system, it may use LATCH system instead of seat belts or if the belt goes across the child's chest, may recommend against using automatic locking mode.

1. When installing the child-restraint system on the second-row seat, make sure that the center-rear seat belt is routed through the seat belt guide.

2. If the seat in which you install a child-restraint system has a seat slide function, slide the seat as far back as possible.
3. Make sure the seatback is securely latched by pushing it back until it is fully locked.
4. Raise the head restraint to the top locked position.
   Refer to Head Restraints on page 2-15.
5. Secure the child-restraint system with the lap portion of the lap/shoulder belt. See the manufacturer's instructions on the child-restraint system for belt routing instructions.
6. To get the retractor into the automatic locking mode, pull the shoulder belt portion of the seat belt until the entire length of the belt is out of the retractor.

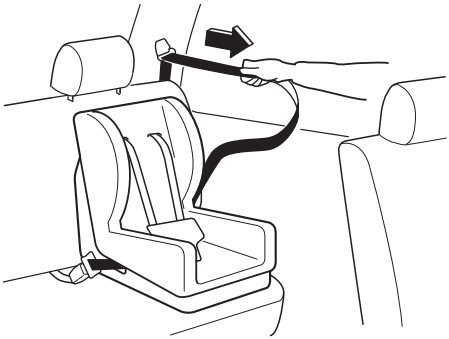

7. Push the child-restraint system firmly into the vehicle seat. Be sure the belt retracts as snugly as possible. A clicking noise from the retractor will be heard during retraction if the system is in the automatic locking mode. If the belt does not lock the seat down tight, repeat this step.

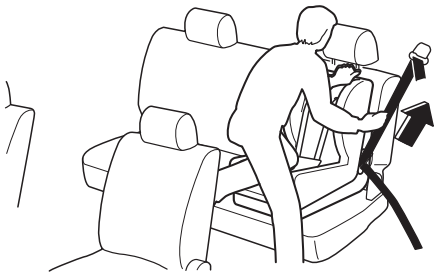

NOTE

Inspect this function before each use of the child-restraint system. You should not be able to pull the shoulder belt out of the retractor while the system is in the automatic locking mode. When you remove the child-restraint system, be sure the belt fully retracts to return the system to emergency locking mode before occupants use the seat belts.

8. If your child-restraint system requires the use of a tether strap, refer to the manufacturer's instructions to hook and tighten the tether strap after raising the head restraint.

Anchor bracket location

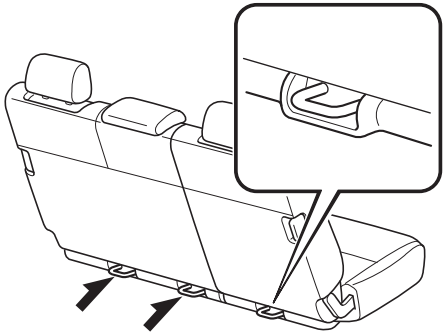

Tether strap position

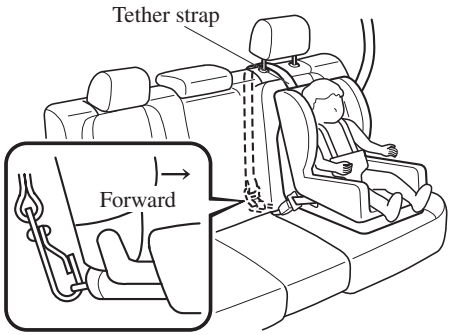

WARNING

Use the tether and tether anchor only for a child-restraint system:

Using the tether or tether anchor to secure anything but a child-restraint system is dangerous. This could weaken or damage the tether or tether anchor and result in injury.

Always route the tether strap between the head restraint and the seatback:

Routing the tether strap on top of the head restraint is dangerous. In a collision the tether strap could slide off the head restraint and loosen the child-restraint system. The child-restraint system could move which may result in death or injury to the child.

Always attach the tether strap to the correct tether anchor position:

Attaching the tether strap to the incorrect tether anchor position is dangerous. In a collision, the tether strap could come off and loosen the child-restraint system. If the child-restraint system moves it could result in death or injury to the child.

▼Third-Row Seats Child-Restraint System Installation

The third-row seats cannot accommodate LATCH-type child-restraint systems or tethers, therefore these systems must be installed on the other seat positions such as the second-row seat. If this is not possible, LATCH-type child-restraint systems should be installed to a third-row seat using the seat belt depending on whether the child-restraint manufacturer allows their use without LATCH attachments and tether anchors.

Follow these manufacturer's instructions when using a child-restraint system.

NOTE

- *Follow the child-restraint system manufacturer's instructions carefully. Depending on the type of child-restraint system, it may not employ seat belts which are in automatic locking mode.*
- ***(With foldable head restraints)***
  The third-row outboard head restraints cannot be adjusted.

1. **(Without foldable head restraints)**
   Raise the head restraint to the top locked position. Refer to Head Restraints on page 2-15.
2. Secure the child-restraint system with the lap portion of the lap/shoulder belt. See the manufacturer's instructions on the child-restraint system for belt routing instructions.
3. To get the retractor into the automatic locking mode, pull the shoulder belt portion of the seat belt until the entire length of the belt is out of the retractor.

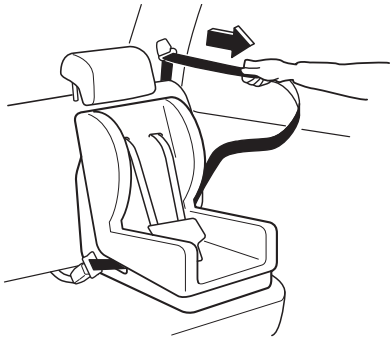

4. Push the child-restraint system firmly into the vehicle seat. Be sure the belt retracts as snugly as possible. Clicking from the retractor will be heard during retraction if the system is in the automatic locking mode. If the belt does not lock the seat down tight, repeat this step.

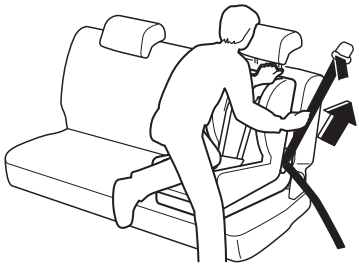

NOTE
Inspect this function before each use of the child-restraint system. You should not be able to pull the shoulder belt out of the retractor while the system is in the automatic locking mode. When you remove the child-restraint system, be sure the belt fully retracts to return the system to emergency locking mode before occupants use the seat belts.

▼If You Must Use the Front Seat for Children

If you cannot put all children in the rear seats, at least put the smallest children in the rear and be sure the largest child up front uses the shoulder belt over the shoulder.
NEVER put a rear-facing child-restraint system on the front passenger seat whether your vehicle is equipped with a seat weight sensor or not.
This seat is also not set up for tethered child-restraint systems, put them in one of the rear seat positions set up with tether anchors.
Likewise the LATCH child-restraint system cannot be secured in the front passenger's seat and should be used in the second-row seats.
Do not allow anyone to sleep against the side window if you have optional side and curtain air bags, it could cause serious injuries to an out of position occupant. As children more often sleep in cars, it is better to put them in the rear seat. If installing the child-restraint system on the front seat is unavoidable, follow these instructions when using a front-facing child-restraint system in the front passenger's seat.

NOTE
- *To check if your front seats have side air bags:*
  Mazda vehicles equipped with side air bag will have a "SRS AIRBAG" tag on the outboard shoulder of the front seats.
- *To check if your vehicle has curtain air bags:*
  Mazda vehicles equipped with curtain air bag will have an "SRS AIRBAG" marking on the window pillars along the roof edge.

⚠ WARNING

Always move the front passenger seat as far back as possible if installing a front-facing child-restraint system on it is unavoidable:
As your vehicle has front air bags and doubly so because your vehicle has side air bags, a front-facing child-restraint system should be put on the front passenger seat only when it is unavoidable.
Even if the front passenger air bag deactivation indicator light illuminates, always move the seat as far back as possible, because the force of a deploying air bag could cause serious injury or death to the child.

Never use a rear-facing child-restraint system in the front seat with an air bag that could deploy:

Rear-facing child-restraint systems on the front seat are particularly dangerous.
Even in a moderate collision, the child-restraint system can be hit by a deploying air bag and moved violently backward resulting in serious injury or death to the child.
Even though you may feel assured that the front passenger air bag will not deploy based on the fact that the front passenger air bag deactivation indicator light illuminates, you should not use a rear-facing child-restraint system in the front seat.

Do not allow a child or anyone to lean over or against the side window of a vehicle with side and curtain air bags:

It is dangerous to allow anyone to lean over or against the side window, the area of the front passenger seat, the front and rear window pillars and the roof edge along both sides from which the side and curtain air bags deploy, even if a child-restraint system is used. The impact of inflation from a side or curtain air bag could cause serious injury or death to an out of position child.
Furthermore, leaning over or against the front door could block the side and curtain air bags and eliminate the advantages of supplemental protection. With the front air bag and the additional side air bag that comes out of the front seat, the rear seat is always a better location for children. Take special care not to allow a child to lean over or against the side window, even if the child is seated in a child-restraint system.

▼Front Passenger's Seat Child-Restraint System Installation

1. Switch the ignition ON.
2. Slide the seat as far back as possible.

3. Place the child-restraint system on the seat without putting your weight on the seat and fasten the seat belt. See the manufacturer's instructions on the child-restraint system for belt routing instructions.

4. To get the retractor into the automatic locking mode, pull the shoulder belt portion of the seat belt until the entire length of the belt is out of the retractor.

5. Push the child-restraint system firmly into the vehicle seat. Be sure the belt retracts as snugly as possible. A clicking noise from the retractor will be heard during retraction if the system is in automatic locking mode. If the belt does not lock the seat down tight, repeat the previous step and also this one.

NOTE

- *Inspect this function before each use of the child-restraint system. You should not be able to pull the shoulder belt out of the retractor while the system is in the automatic locking mode. When you remove the child-restraint system, be sure the belt fully retracts to return the system to emergency locking mode before occupants use the seat belts.*
- *Follow the child-restraint system manufacturer's instructions carefully. Depending on the type of child-restraint system, it may not employ seat belts which are in automatic locking mode.*

6. Seat your child safely in the child-restraint system and secure the child according to the instructions from the child-restraint system manufacturer.

7. **(With Driver and Front Passenger Occupant Classification System)**
   Make sure the front passenger air bag deactivation indicator light illuminates after installing a child-restraint system on the front passenger seat.
   If the front passenger air bag deactivation indicator light does not illuminate, remove the child-restraint system, switch the ignition to OFF or ACC, and then re-install the child-restraint system.
   Refer to Front Passenger Seat Weight Sensors on page 2-68.

WARNING

Do not seat a child in a child-restraint system on the front passenger seat if the front passenger air bag deactivation indicator light does not illuminate (With Driver and Front Passenger Occupant Classification System):

While it is always better to install any child-restraint system on the rear seat, it is imperative that a child-restraint system ***ONLY*** *be used on the front passenger seat if the deactivation indicator light illuminates when the child is seated in the child-restraint system (page 2-68). Seating a child in a child-restraint system installed on the front passenger seat with the front passenger air bag deactivation indicator light not illuminated is dangerous. If this indicator light does not illuminate, this means that the front passenger front and side air bags, and seat belt pretensioner are ready for deployment. If an accident were to deploy an air bag, a child in a child-restraint system sitting in the front passenger seat could be seriously injured or killed. If the indicator light does not illuminate after seating a child in a child-restraint system on the front passenger seat, seat a child in a child-restraint system on the rear seat and consult an Authorized Mazda Dealer as soon as possible.*

LATCH Child-Restraint Systems

Your Mazda is equipped with LATCH lower anchors for attachment of specially designed LATCH child-restraint systems in the second-row seats. Both anchors must be used, otherwise the seat will bounce around and put the child in danger. Most LATCH child-restraint systems must also be used in conjunction with a tether to be effective. If they have a tether you must use it to better assure your child's safety.

WARNING

Follow the manufacturer's instructions for the use of the child-restraint system:
An unsecured child-restraint system is dangerous. In a sudden stop or a collision it could move causing serious injury or death to the child or other occupants. Make sure the child-restraint system is properly secured in place according to the child-restraint system manufacturer's instructions.

Never attach two child-restraint systems to the same LATCH lower anchor:
Attaching two child-restraint systems to the same LATCH lower anchor is dangerous. In a collision, one anchor may not be strong enough to hold two child-restraint system attachments, and it may break, causing serious injury or death. If you use the seat position for another child-restraint system when an outboard LATCH position is occupied, use the center seat belts instead, and the tether if tether-equipped.

Make sure the child-restraint system is properly secured:
An unsecured child-restraint system is dangerous. In a sudden stop or a collision it could move causing serious injury or death to the child or other occupants. Follow the child-restraint system manufacturer's instructions on belt routing to secure the seat just as you would with a child in it so that nobody is tempted to put a child in an improperly secured seat later on. When not in use, remove it from the vehicle or fasten it with a seat belt, or latch it down to BOTH LATCH lower anchors for LATCH child-restraint systems.

Make sure there are no seat belts or foreign objects near or around the LATCH child-restraint system:
Not following the child-restraint system manufacturer's instructions when installing the child-restraint system is dangerous. If seat belts or a foreign object prevent the child-restraint system from being securely attached to the LATCH lower anchors and the child-restraint system is installed improperly, the child-restraint system could move in a sudden stop or collision causing serious injury or death to the child or other occupants. When installing the child-restraint system, make sure there are no seat belts or foreign objects near or around the LATCH lower anchors. Always follow the child-restraint system manufacturer's instructions.

▼LATCH Child-Restraint System Installation Procedure (Second-Row Outboard Seats)

1. Slide the second-row seat as far back as possible.
2. Make sure the seatback is securely latched by pushing it back until it is fully locked.
3. Expand the area between the seat bottom and the seatback slightly to verify the locations of the LATCH lower anchors.

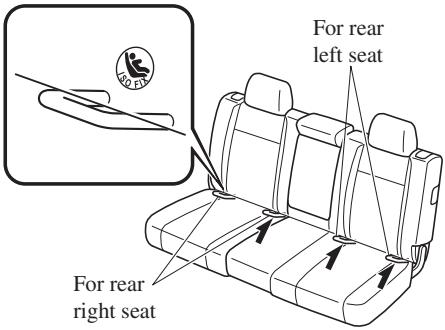

NOTE
The markings above the LATCH lower anchors indicate the locations of LATCH lower anchors for the attachment of a child-restraint system.

4. Raise the head restraint to the top locked position.
   Refer to Head Restraints on page 2-15.
5. Secure the child-restraint system using BOTH LATCH lower anchors, following the child-restraint system manufacturer's instruction. Pull on the child-restraint to be sure both anchors are engaged.
6. If your child-restraint system came equipped with a tether, that means it is very important to properly secure the tether for child safety. Please carefully follow the child-restraint system manufacturer's instructions when installing tethers.

Anchor bracket location

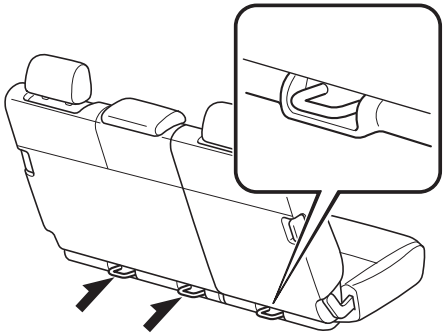

Tether strap position

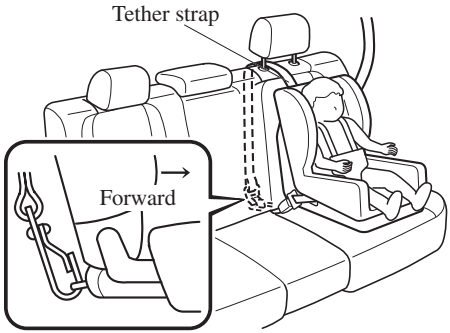

⚠ WARNING

Use the tether and tether anchor only for a child-restraint system:

Using the tether or tether anchor to secure anything but a child-restraint system is dangerous. This could weaken or damage the tether or tether anchor and result in injury.

Always route the tether strap between the head restraint and the seatback:

Routing the tether strap on top of the head restraint is dangerous. In a collision the tether strap could slide off the head restraint and loosen the child-restraint system. The child-restraint system could move which may result in death or injury to the child.

Always attach the tether strap to the correct tether anchor position:

Attaching the tether strap to the incorrect tether anchor position is dangerous. In a collision, the tether strap could come off and loosen the child-restraint system. If the child-restraint system moves it could result in death or injury to the child.

▼LATCH Child-Restraint System Installation Procedure (Second-Row Center Seat)

The LATCH lower anchors at the center of the second-row seat are much further apart than the sets of LATCH lower anchors for child-restraint system installation at other seating positions. Child-restraint systems with rigid LATCH attachments cannot be installed on the center seating position. Some LATCH equipped child-restraint systems can be placed in the center position and will reach the nearest LATCH lower anchors which are 500 mm (19.7 in) apart. LATCH compatible child-restraint systems (with attachments on belt webbing) can be used at this seating position only if the child-restraint system manufacturer's instructions state that the child-restraint system can be installed to LATCH lower anchors that are 500 mm (19.7 in) apart. Do not attach two child-restraint systems to the same LATCH lower anchor. If your child-restraint system has a tether, it must also be used for your child's optimum safety.

WARNING

Use the tether and tether anchor only for a child-restraint system:

Using the tether or tether anchor to secure anything but a child-restraint system is dangerous. This could weaken or damage the tether or tether anchor and result in injury.

Always route the tether strap between the head restraint and the seatback:

Routing the tether strap on top of the head restraint is dangerous. In a collision the tether strap could slide off the head restraint and loosen the child-restraint system. The child-restraint system could move which may result in death or injury to the child.

Always attach the tether strap to the correct tether anchor position:

Attaching the tether strap to the incorrect tether anchor position is dangerous. In a collision, the tether strap could come off and loosen the child-restraint system. If the child-restraint system moves it could result in death or injury to the child.

1. Slide the second-row seat as far back as possible.
2. Make sure the seatback is securely latched by pushing it back until it is fully locked.
3. Expand the area between the seat bottom and the seatback slightly to verify the locations of the LATCH lower anchors.

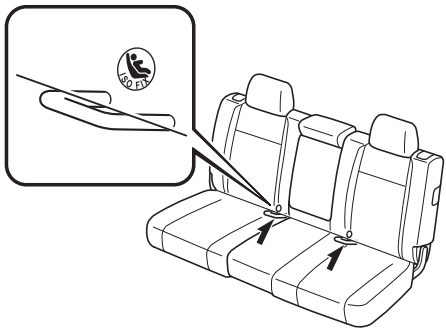

NOTE

The markings above the LATCH lower anchors indicate the locations of LATCH lower anchors for the attachment of a child-restraint system.

4. Raise the head restraint to the top locked position.
   Refer to Head Restraints on page 2-15.
5. Secure the child-restraint system using BOTH LATCH lower anchors, following the child-restraint system manufacturer's instructions. Pull on the child-restraint to be sure both anchors are engaged.
6. If your child-restraint system came equipped with a tether, that means it is very important to properly secure the tether for child safety. Please carefully follow the child-restraint system manufacturer's instructions when installing tethers.

Anchor bracket position

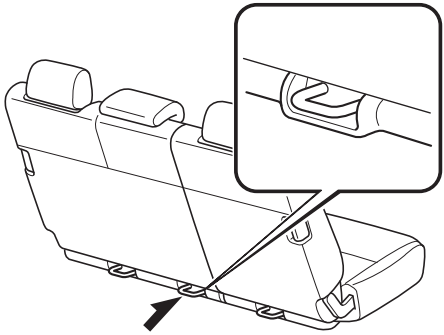

Tether strap position

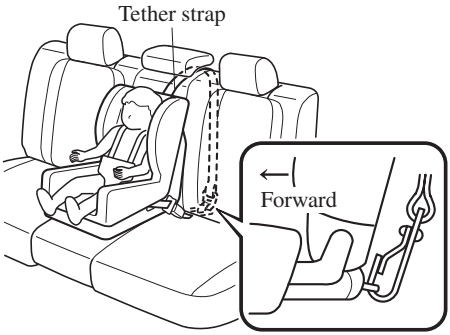

Supplemental Restraint System (SRS) Precautions

The front and side supplemental restraint systems (SRS) include 6 air bags. **Please verify the air bags equipped on your vehicle by locating the "SRS AIRBAG" location indicators.** These indicators are visible in the area where the air bags are installed.
The air bags are installed in the following locations:

- The steering wheel hub (driver air bag)
- The front passenger dashboard (front passenger air bag)
- The outboard sides of the front seatbacks (side air bags)
- The front and rear window pillars, and the roof edge along both sides (curtain air bags)

The air bag supplemental restraint systems are designed to provide supplemental protection in certain situations, so seat belts are always important in the following ways:

Without seat belt usage, the air bags cannot provide adequate protection during an accident.
Seat belt usage is necessary to:
- Keep the occupant from being thrown into an inflating air bag.
- Reduce the possibility of injuries during an accident that is not designed for air bag inflation, such as rear impact.
- Reduce the possibility of injuries in frontal, near frontal, side collisions or roll-over accidents that are not severe enough to activate the air bags.
- Reduce the possibility of being thrown from your vehicle.
- Reduce the possibility of injuries to lower body and legs during an accident because the air bags provide no protection to these parts of the body.
- Hold the driver in a position which allows better control of the vehicle.

If your vehicle is also equipped with a driver and front passenger occupant classification system, refer to the Driver and Front Passenger Occupant Classification System (page 2-68) for details.
If your vehicle is equipped with a driver and front passenger occupant classification system, the front passenger air bag deactivation indicator light illuminates for a specified time after the ignition is switched ON.

Small children must be protected by a child-restraint system as stipulated by law in every state and province. In certain states and provinces, larger children must use a child-restraint system (page 2-35).

Carefully consider which child-restraint system is necessary for your child and follow the installation directions in this Owner's Manual as well as the child-restraint system manufacturer's instructions.

WARNING

Seat belts must be worn in air bag equipped vehicles:
Depending only on the air bags for protection during an accident is dangerous. Alone, air bags may not prevent serious injuries. The appropriate air bags can be expected to inflate only in the first accident, such as frontal, near frontal, side collisions or roll-over accident that are at least moderate. Vehicle occupants should always wear seat belts.

Children should not ride in the front passenger seat:
Placing a child, 12 years or under, in the front seat is dangerous. The child could be hit by a deploying air bag and be seriously injured or even killed. Even if the front passenger air bag deactivation indicator light illuminates, always move the front passenger seat as far back as possible. A sleeping child is more likely to lean against the door and be hit by the side air bag in a moderate collision to the front-passenger side of the vehicle. Whenever possible, always secure a child 12 years and under on the rear seats with an appropriate child-restraint system for the child's age and size.

Never use a rear-facing child-restraint system in the front seat with an air bag that could deploy:

Rear-facing child-restraint systems on the front seat are particularly dangerous even though you may feel assured that a front passenger air bag will not deploy based on the fact that the front passenger air bag deactivation indicator light illuminates. The child-restraint system can be hit by a deploying air bag and moved violently backward resulting in serious injury or death to the child.

Extreme Hazard! Never use a rear-facing child-restraint system on the front passenger seat with an air bag that could deploy:

Extreme Hazard! Do not use a rearward facing child restraint on a seat protected by an airbag in front of it!
Even in a moderate collision, the child-restraint system can be hit by a deploying air bag and moved violently backward resulting in serious injury or death to the child.

Do not sit too close to the driver and front passenger air bags:

Sitting too close to the driver and front passenger air bag modules or placing hands or feet on them is extremely dangerous. The driver and front passenger air bags inflate with great force and speed. Serious injuries could occur if someone is too close. The driver should always hold onto only the rim of the steering wheel. The front seat passenger should keep both feet on the floor. Front seat occupants should adjust their seats as far back as possible and always sit upright against the seatbacks with seat belts worn properly.

Sit in the center of the seat and wear seat belts properly:

Sitting too close to the side air bag modules or placing hands on them, or sleeping up against the door or hanging out the windows is extremely dangerous. The side and curtain air bags inflate with great force and speed directly expanding along the door on the side the car is hit. Serious injury could occur if someone is sitting too close to the door or leaning against a window, or if rear seat occupants grab the sides of the front seatbacks. Give the side and curtain air bags room to work by sitting in the center of the seat while the vehicle is moving with seat belts worn properly.

Do not attach objects on or around the area where driver and front passenger air bags deploy:

Attaching an object to the driver and front passenger air bag modules or placing something in front of them is dangerous. In an accident, an object could interfere with air bag inflation and injure the occupants.

Do not attach objects on or around the area where a side air bag deploys:

Attaching objects to the front seat in such a way as to cover the outboard side of the seat in any way is dangerous. In an accident the object could interfere with the side air bag, which inflates from the outboard side of the front seats, impeding the added protection of the side air bag system or redirecting the air bag in a way that is dangerous. Furthermore, the bag could be cut open releasing the gas.

Do not hang net bags, map pouches or backpacks with side straps on the front seats. Never use seat covers on the front seats. Always keep the side air bag modules in your front seats free to deploy in the event of a side collision.

Do not attach objects on or around the area where a curtain air bag deploys:

Attaching objects to the areas where the curtain air bag activates such as on the windshield glass, side door glass, front and rear window pillars and along the roof edge and assist grips is dangerous. In an accident the object could interfere with the curtain air bag, which inflates from the front and rear window pillars and along the roof edge, impeding the added protection of the curtain air bag system or redirecting the air bag in a way that is dangerous. Furthermore, the bag could be cut open releasing the gas.

Do not place hangers or any other objects on the assist grips. When hanging clothes, hang them on the coat hook directly. Always keep the curtain air bag modules free to deploy in the event of a side collision or roll-over accident.

Do not place luggage or other objects under the front seats:

Placing luggage or other objects under the front seats is dangerous. The components essential to the supplemental restraint system could be damaged, and in the event of a side collision, the appropriate air bags may not deploy, which could result in death or serious injury. To prevent damage to the components essential to the supplemental restraint system, do not place luggage or other objects under the front seats.

Do not touch the components of the supplemental restraint system after the air bags have inflated:

Touching the components of the supplemental restraint system after the air bags have inflated is dangerous. Immediately after inflation, they are very hot. You could get burned.

Never install any front-end equipment to your vehicle:

Installation of front-end equipment, such as frontal protection bar (kangaroo bar, bull bar, push bar, or other similar devices), snowplow, or winches, is dangerous. The air bag crash sensor system could be affected. This could cause air bags to inflate unexpectedly, or it could prevent the air bags from inflating during an accident. Front occupants could be seriously injured.

Do not modify the suspension:

Modifying the vehicle suspension is dangerous. If the vehicle's height or the suspension is modified, the vehicle will be unable to accurately detect a collision or roll-over accident resulting in incorrect or unexpected air bag deployment and the possibility of serious injuries.

To prevent false detection by the air bag sensor system, heed the following:

- *Do not use tires or wheels other than those specified for your Mazda:*
  Use of any tire or wheel other than those specified for your Mazda (page 10-6) is dangerous. Use of such wheels will prevent the vehicle's accident detections system from accurately detecting a collision or roll-over accident resulting in incorrect or unexpected air bag deployment and the possibility of serious injuries.
- *Do not overload your vehicle:*
  Overloading your vehicle is dangerous as it could prevent the air bag crash sensor system from accurately detecting a collision or roll-over accident resulting in incorrect or unexpected air bag deployment and the possibility of serious injuries. The gross axle weight rating (GAWR) and the gross vehicle weight rating (GVWR) for your vehicle are on the Motor Vehicle Safety Standard Label on the driver's door frame. Do not exceed these ratings.
- *Do not drive the vehicle off-road:*
  Driving your Mazda off-road is dangerous because the vehicle has not been designed to do so. Driving the vehicle off-road could prevent the air bag crash sensor system from accurately detecting a collision or roll-over accident resulting in incorrect or unexpected air bag deployment and the possibility of serious injuries.

Do not modify the supplemental restraint system:

Modifying the components or wiring of the supplemental restraint system is dangerous. You could accidentally activate it or make it inoperable. Do not make any modifications to the supplemental restraint system. This includes installing trim, badges, or anything else over the air bag modules. It also includes installing extra electrical equipment on or near system components or wiring. An Authorized Mazda Dealer can provide the special care needed in the removal and installation of front seats. It is important to protect the air bag wiring and connections to assure that the bags do not accidentally deploy, the driver seat slide position sensor and front passenger seat weight sensors are not damaged and that the seats retain an undamaged air bag connection.

NOTE

- *When an air bag deploys, a loud inflation noise can be heard and some smoke will be released. Neither is likely to cause injury, however, the texture of the air bags may cause light skin injuries on body parts not covered with clothing through friction.*
- *Should you sell your Mazda, we urge you to tell the new owner of its air bag systems and that familiarization with all instructions about them, from the Owner's Manual, is important.*
- *This highly-visible label is displayed which warns against the use of rear-facing child-restraint systems on the front passenger seat.*

Supplemental Restraint System Components

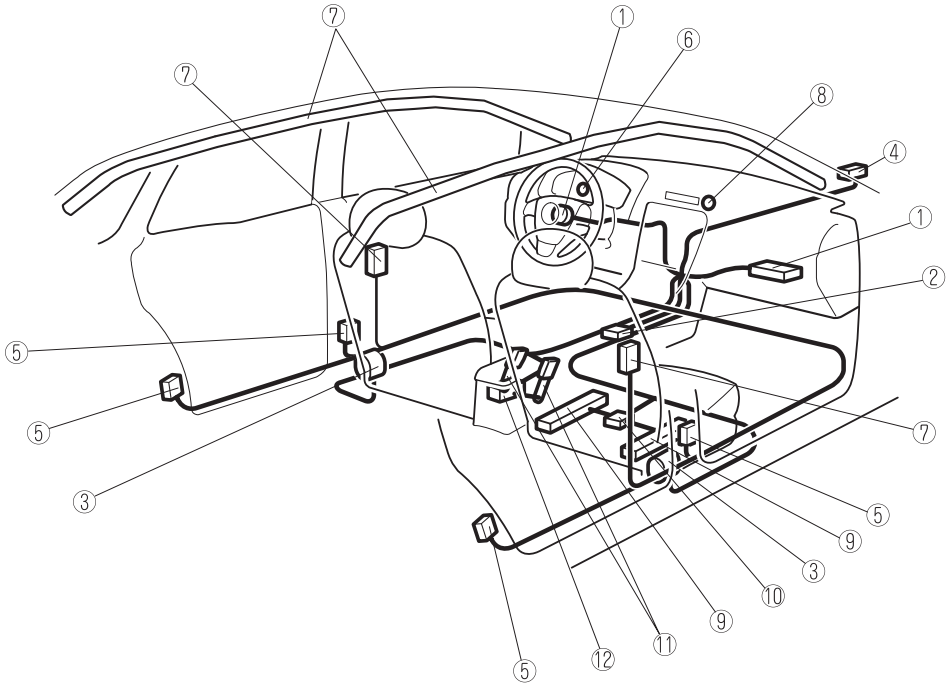

① Driver/Front passenger inflators and air bags
② Crash and roll-over sensor, and diagnostic module (SAS unit)
③ Front seat belt pretensioner and load limiting systems (page 2-25)
④ Front air bag sensor
⑤ Side crash sensors
⑥ Air bag/front seat belt pretensioner system warning light (page 2-64)
⑦ Side and curtain inflators and air bags
⑧ Front passenger air bag deactivation indicator light (page 2-68)
⑨ Front passenger seat weight sensors (page 2-68)
⑩ Front passenger seat weight sensor control module
⑪ Driver and front passenger seat belt buckle switches (page 2-72)
⑫ Driver seat slide position sensor (page 2-68)

NOTE
⑧ - ⑫ are equipped only on models with the driver and front passenger occupant classification system.

How the SRS Air Bags Work

Your Mazda is equipped with the following types of SRS air bags. SRS air bags are designed to work together with the seat belts to help to reduce injuries during an accident. The SRS air bags are designed to provide further protection for passengers in addition to the seat belt functions. Be sure to wear seat belts properly.

▼Front Seat Belt Pretensioners

The front seat belt pretensioners are designed to deploy in moderate or severe frontal, near frontal collisions or roll-over accidents.

▼Driver Air Bag

The driver's air bag is mounted in the steering wheel.
When air bag crash sensors detect a frontal impact of greater than moderate force, the driver's air bag inflates quickly helping to reduce injury mainly to the driver's head or chest caused by directly hitting the steering wheel.
For more details about air bag deployment, refer to “SRS Air Bag Deployment Criteria” (page 2-65).
(With Driver and Front Passenger Occupant Classification System)
The driver's dual-stage air bag controls air bag inflation in two energy stages. During an impact of moderate severity the driver's air bag deploys with lesser energy, whereas during more severe impacts, it deploys with more energy.

▼Front Passenger Air Bag

The front passenger air bag is mounted in the front passenger dashboard. The inflation mechanism for the front passenger air bag is the same as the driver's air bag, as mentioned above.
For more details about air bag deployment, refer to “SRS Air Bag Deployment Criteria” (page 2-65).

(With Driver and Front Passenger Occupant Classification System)
In addition, the front passenger air bag is designed to only deploy in accordance with the total seated weight on the front passenger seat. For details, refer to the driver and front passenger occupant classification system (page 2-68).

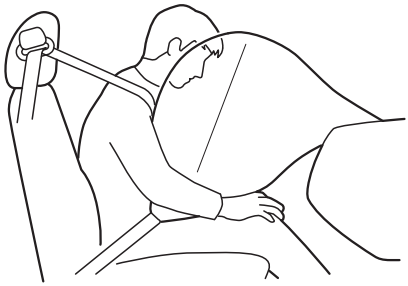

▼Side Air Bags

The side air bags are mounted in the outboard sides of the front seatbacks.
When the air bag crash sensors detect a side impact of greater than moderate force, the system inflates the side air bag only on the side in which the vehicle was hit. The side air bag inflates quickly to reduce injury to the driver or front passenger's chest caused by directly hitting interior parts such as a door or window.
For more details about air bag deployment, refer to “SRS Air Bag Deployment Criteria” (page 2-65).
(With Driver and Front Passenger Occupant Classification System)
In addition, the front passenger side air bag is designed to only deploy in accordance with the total seated weight on the front passenger seat. For details, refer to the driver and front passenger occupant classification system (page 2-68).

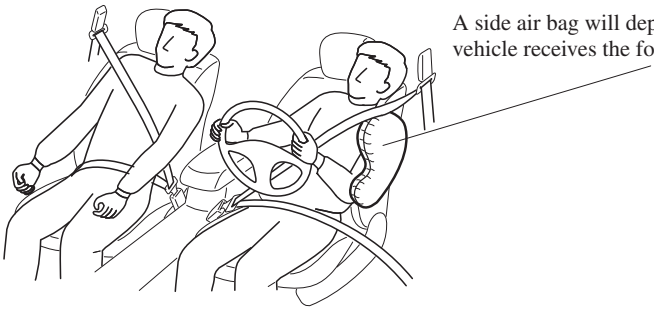

▼Curtain Air Bags

The curtain air bags are mounted in the front and rear window pillars, and the roof edge along both sides.
When the air bag crash sensors detect a side impact of greater than moderate force, the curtain air bag inflates quickly and helps to reduce injury mainly to the rear outboard passenger's head caused by directly hitting interior parts such as a door or window.
For more details about air bag deployment, refer to “SRS Air Bag Deployment Criteria” (page 2-65).

In a side impact:
Greater than moderate impact to one side of the vehicle will cause the curtain air bag on that side only to inflate.

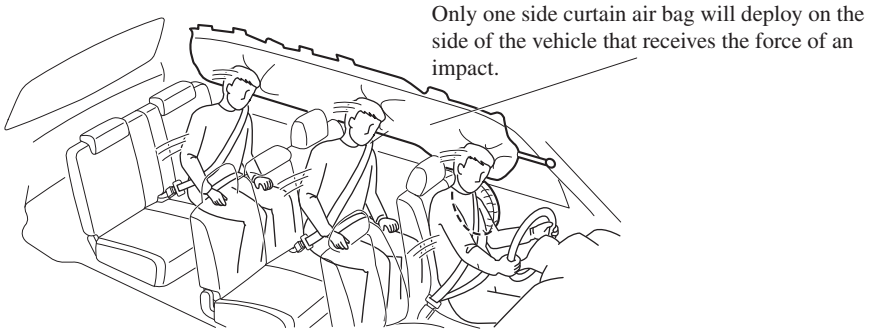

In a roll-over:
In response to a vehicle roll-over, both curtain air bags inflate.

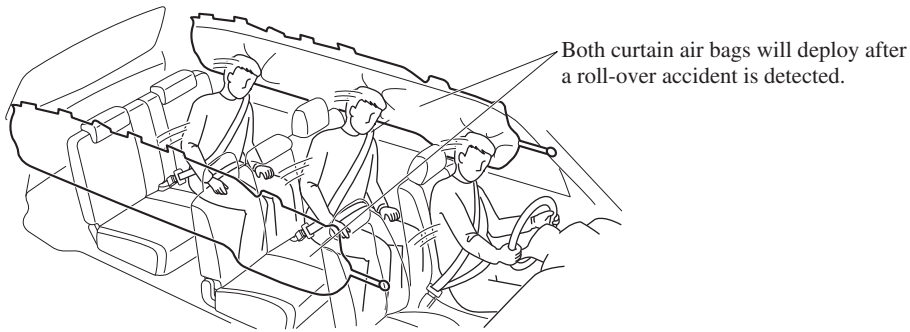

▼Air Bag/Front Seat Belt Pretensioner System Warning Light

If the air bag/front seat belt pretensioner system is working properly, the warning light illuminates when the ignition is switched ON or after the engine is cranked. The warning light turns off after a specified period of time.

A system malfunction is indicated if the warning light constantly flashes, constantly illuminates or does not illuminate at all when the ignition is switched ON. If any of these occur, consult an Authorized Mazda Dealer as soon as possible. The system may not operate in an accident.

⚠ WARNING

Never tamper with the air bag/pretensioner systems and always have an Authorized Mazda Dealer perform all servicing and repairs:

Self-servicing or tampering with the systems is dangerous. An air bag/pretensioner could accidentally activate or become disabled causing serious injury or death.

▼Air Bag/Front Seat Belt Pretensioner System Warning Beep

If a malfunction is detected in the air bag/front seat belt pretensioner systems and the warning light, a warning beep sound will be heard for about 5 seconds every minute.

The air bag and seat belt pretensioner system warning beep sound will continue to be heard for approximately 35 minutes.
Have your vehicle inspected at an Authorized Mazda Dealer as soon as possible.

⚠ WARNING

Do not drive the vehicle with the air bag/front seat belt pretensioner system warning beep sounding:

Driving the vehicle with the air bag/front seat belt pretensioner system warning beep sounding is dangerous. In a collision, the air bags and the front seat belt pretensioner system will not deploy and this could result in death or serious injury. Contact an Authorized Mazda Dealer to have the vehicle inspected as soon as possible.

SRS Air Bag Deployment Criteria

This chart indicates the applicable SRS equipment that will deploy depending on the type of collision.
(The illustrations are the representative cases of collisions.)

SRS equipment	Types of collision			
	A severe frontal/near frontal collision	A severe side collision	A roll-over/near roll-over	A rear collision
	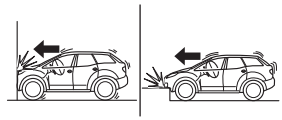	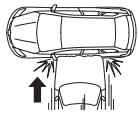		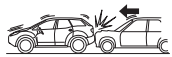
	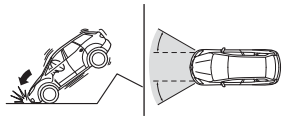			
Front seat belt pretensioner	X*1 (both sides)		X*1 (both sides)	No air bag and front seat belt pretensioner will be activated in a rear collision.
Driver air bag	X			
Front passenger air bag	X*1			
Side air bag		X*1 (impact side only)		
Curtain air bag		X (impact side only)	X (both sides)	

X: The SRS air bag equipment is designed to deploy in a collision.
*1: **(With Driver and Front Passenger Occupant Classification System)**
The front passenger front and side air bags and the seat belt pretensioner are designed to deploy depending on the condition of the total seated weight on the front passenger seat.

Limitations to SRS Air Bag

In severe collisions or roll-overs such as those described previously in “SRS Air Bag Deployment Criteria”, the applicable SRS air bag equipment will deploy. However, in some accidents, the equipment may not deploy depending on the type of collision and its severity.

Limitations to front/near front collision detection:
The following illustrations are examples of front/near front collisions that may not be detected as severe enough to deploy the SRS air bag equipment.

Impacts involving trees or poles

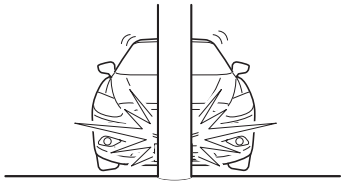

Frontal offset impact to the vehicle

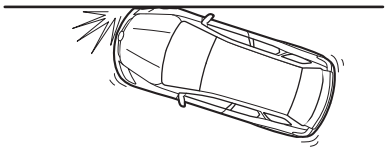

Rear-ending or running under a truck's tail gate

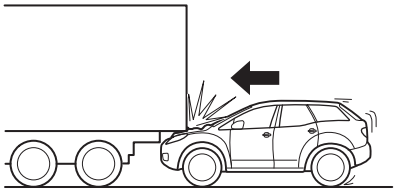

Limitations to side collision detection:
The following illustrations are examples of side collisions that may not be detected as severe enough to deploy the SRS air bag equipment.

Side impacts involving trees or poles

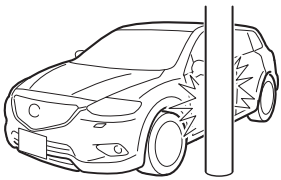

Side impacts with two-wheeled vehicles

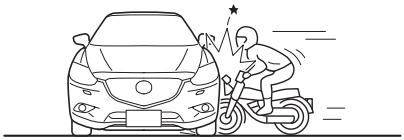

Limitations to roll-over detection:
The following illustration is an example of an accident that may not be detected as a roll-over accident. Therefore, the front seat belt pretensioners and curtain air bags may not deploy.

Pitch end over end

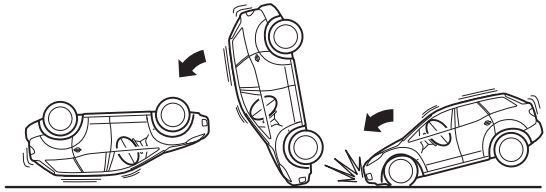

Driver and Front Passenger Occupant Classification System *

First, please read “Supplemental Restraint System (SRS) Precautions” (page 2-54) carefully.

NOTE
This system is equipped on models for the U.S., Canadian and Puerto Rican markets.

▼Driver Seat Slide Position Sensor

Your vehicle is equipped with a driver seat slide position sensor as a part of the supplemental restraint system. The sensor is located under the driver seat. The sensor determines whether the driver seat is fore or aft of a reference position and sends the seat position to the diagnostic module (SAS unit). The SAS unit is designed to control the deployment of the driver air bag depending on how close the driver seat is to the steering wheel.
The air bag/front seat belt pretensioner system warning light flashes if the sensor has a possible malfunction (page 2-64).

▼Front Passenger Seat Weight Sensors

Your vehicle is equipped with a front passenger seat weight sensors as a part of the supplemental restraint system. These sensors are located under both of the front passenger seat rails. These sensors determine the total seated weight on the front passenger seat and monitor the seat belt buckle for the front passenger seat. The SAS unit is designed to prevent the front passenger front and side air bags and seat belt pretensioner system from deploying if the front passenger air bag deactivation indicator light illuminates.
To reduce the chance of injuries caused by deployment of the front passenger air bag, the system deactivates the front passenger front and side air bags and also the seat belt pretensioner system when the front passenger air bag deactivation indicator light illuminates. Refer to the following table for the front passenger air bag deactivation indicator light illumination conditions.

This system shuts off the front passenger front and side air bags and seat belt pretensioner system, so make sure the front passenger air bag deactivation indicator light illuminates according to the following table.

The air bag/front seat belt pretensioner system warning light flashes and the front passenger air bag deactivation indicator light illuminates if the sensors have a possible malfunction. If this happens, the front passenger front and side air bags and seat belt pretensioner system will not deploy.

 *Some models.

Front passenger air bag deactivation indicator light

This indicator light illuminates to remind you that the front passenger front and side air bags and seat belt pretensioner will not deploy during a collision.

If the front passenger weight sensors are normal, the indicator light illuminates when the ignition is switched ON. The light turns off after a few seconds.

The front passenger air bag deactivation indicator light illuminates or is off under the following conditions:

Condition detected by the front passenger occupant classification system	Front passenger air bag deactivation indicator light	Front passenger front and side air bags	Front passenger seat belt pretensioner system
Empty (Not occupied)*1	Off	Deactivated	Deactivated
Child or child-restraint system*2	On	Deactivated	Deactivated
Adult*3	Off	Ready	Ready

*1 : If the front passenger seat belt is buckled, the front passenger air bag deactivation indicator light illuminates, however this does not indicate a malfunction.
*2 : If a larger child sits on the front passenger seat, the sensors might detect the child as being an adult depending on the child's physique.
*3 : If a smaller adult sits on the front passenger seat, the sensors might detect the person as being a child depending on the person's physique.
The curtain air bag is ready for inflating regardless of the chart above.

If the front passenger air bag deactivation indicator light does not illuminate when the ignition is switched ON and does not illuminate as indicated in the above chart, do not allow a child to sit in the front passenger seat and consult an Authorized Mazda Dealer as soon as possible. The system may not work properly in an accident.

WARNING

Do not decrease the total seated weight on the front passenger seat:

When an adult or large child sits on the front passenger seat, decreasing the total seated weight on the front passenger seat required for air bag deployment is dangerous. The front passenger seat weight sensors will detect the reduced total seated weight condition and the front passenger front and side air bags and seat belt pretensioner system will not deploy during an accident. The front passenger will not have the supplementary protection of the air bag, which could result in serious injury. Decreasing the total seated weight on the front passenger seat could result in an air bag not deploying under the following conditions, for example:

- *A rear passenger pushes up on the front passenger seat with their feet.*
- *Luggage or other items placed under the front passenger seat or between the front passenger seat and driver seat that push up the front passenger seat bottom.*
- *The front passenger seat occupant sits in a manner that does not place the entire weight of the occupant on the seat such as by sitting too close to the door, grasping the assist grip or the rim of the moonroof and sitting with the seatback reclined too far.*
- *Any accessories which might decrease the total seated weight on the front passenger seat are attached to the front passenger seat.*

The front passenger front and side air bags and seat belt pretensioner systems will deactivate if the front passenger air bag deactivation indicator light illuminates.

Do not increase the total seated weight on the front passenger seat:

When an infant or small child sits on the front passenger seat, increasing the total seated weight on the front passenger seat is dangerous. The front passenger seat weight sensors will detect the increased total seated weight, which could result in the unexpected deployment of the front passenger front and side air bags and seat belt pretensioner system in an accident and may cause serious injury. Increasing the total seated weight on the front passenger seat could result in the front passenger front and side air bags and seat belt pretensioner system deployment in an accident under the following conditions, for example:

- *Luggage or other items are placed on the seat with the child in the child-restraint system.*
- *A rear passenger or luggage push or pull down on the front passenger seatback.*
- *A rear passenger steps on the front passenger seat rails with their feet.*
- *Luggage or other items are placed on the seatback or hung on the head restraint.*
- *Heavy items are placed in the seatback map pocket.*
- *The seat is washed.*
- *Liquids are spilled on the seat.*
- *The front passenger seat is moved backward, pushing into luggage or other items placed behind it.*
- *The front passenger seatback contacts the second-row seat.*
- *Luggage or other items are placed between the front passenger seat and driver seat.*
- *Any accessories which might increase the total seated weight on the front passenger seat are attached to the front passenger seat.*

The front passenger front and side air bags and seat belt pretensioner systems will deactivate if the front passenger air bag deactivation indicator light illuminates.

⚠ CAUTION

- *To assure proper deployment of the front air bag and to prevent damage to the sensors in the front seat bottoms:*
  - *Do not place sharp objects on the front seat bottoms or leave heavy luggage on them.*
  - *Do not spill any liquids on the front seats or under the front seats.*
- *To allow the sensors to function properly, always perform the following:*
  - *Adjust the front seats as far back as possible and always sit upright against the seatbacks with seat belts worn properly.*
  - *If you place your child on the front passenger seat, secure the child-restraint system properly and slide the front passenger seat as far back as possible (page 2-46).*

NOTE

- *The system requires about 10 seconds to alternate between turning the front passenger front and side air bags and seat belt pretensioner system on or off.*
- *The front passenger air bag deactivation indicator light may illuminate repeatedly if luggage or other items are put on the front passenger seat, or if the temperature of the vehicle's interior changes suddenly.*
- *The front passenger air bag deactivation indicator light may illuminate for 10 seconds if the total seated weight on the front passenger seat changes.*
- *The air bag/front seat belt pretensioner system warning light might illuminate if the front passenger seat receives a severe impact.*
- *If the front passenger air bag deactivation indicator light does not illuminate after installing a child-restraint system on the front passenger seat, first, re-install your child-restraint system according to the procedure in this owner's manual. Then, if the front passenger air bag deactivation indicator light still does not illuminate, install the child-restraint system on the rear seat and consult an Authorized Mazda Dealer as soon as possible.*
- *If the front passenger air bag deactivation indicator light illuminates when an adult is seated in the front passenger seat, have the passenger re-adjust their posture by sitting with their feet on the floor, and then re-fastening the seat belt. If the front passenger air bag deactivation indicator light still illuminates, move the passenger to the rear seat. If sitting in the rear seat is not possible, slide the front passenger seat as far back as possible. Consult an Authorized Mazda Dealer as soon as possible.*

▼Driver and Front Passenger Buckle Switches

The buckle switches on the front seat belts detect whether or not the front seat belts are securely fastened and further control the deployment of the air bags.

Monitoring and Maintenance

▼Constant Monitoring

The following components of the air bag systems are monitored by a diagnostic system:

- Crash sensors, and diagnostic module (SAS unit)
- Front air bag sensor
- Air bag modules
- Side crash sensors
- Air bag/Front seat belt pretensioner system warning light
- Front seat belt pretensioners
- Related wiring

(With Driver and Front Passenger Occupant Classification System)

- Front passenger air bag deactivation indicator light
- Driver seat slide position sensor
- Front passenger seat weight sensors
- Front passenger seat weight sensor control module

The diagnostic module continuously monitors the system's readiness. This begins when the ignition is switched ON and continues while the vehicle is being driven.

▼Maintenance

The air bag systems do not require regular maintenance. But if any of the following occurs, take your vehicle to an Authorized Mazda Dealer as soon as possible:

- The air bag system warning light flashes.
- The air bag system warning light remains illuminated.
- The air bag system warning light does not illuminate when the ignition is switched ON.
- The air bag system warning beep sound is heard.
- The air bags have deployed.
- **(With Driver and Front Passenger Occupant Classification System)**
  Front passenger air bag deactivation indicator light does not illuminate when the ignition is switched ON or does not illuminate as indicated in the chart. For more details about this indicator light and this chart, refer to “Front passenger seat weight sensors” (page 2-68).

WARNING

Do not operate a vehicle with damaged air bag/seat belt pretensioner system components:

Expended or damaged air bag/seat belt pretensioner system components must be replaced after any collision which caused them to deploy or damage them. Only a trained Authorized Mazda Dealer can fully evaluate these systems to see that they will work in any subsequent accident. Driving with an expended or damaged air bag or pretensioner unit will not afford you the necessary protection in the event of any subsequent accident which could result in serious injury or death.

Do not remove interior air bag parts:

Removing any components such as the front seats, front dashboard, the steering wheel or parts on the front and rear window pillars and along the roof edge, containing air bag parts or sensors is dangerous. These parts contain essential air bag components. The air bag could accidentally activate and cause serious injuries. Always have an Authorized Mazda Dealer remove these parts.

Dispose of the air bag properly:

Improper disposal of an air bag or a vehicle with live air bags in it can be extremely dangerous. Unless all safety procedures are followed, injury can result. Ask an Authorized Mazda Dealer how to safely dispose of an air bag or how to scrap an air bag equipped vehicle.

NOTE

If it becomes necessary to have the components or wiring system for the supplementary restraint system modified to accommodate a person with certain medical conditions in accordance with a certified physician, contact an Authorized Mazda Dealer, refer to "Customer Assistance (U.S.A.)" (page 9-2).

3 Knowing Your Mazda

Explanation of basic operations and controls; opening/closing and adjustment of various parts.

Advanced Keyless Entry and Start System 3-2
Advanced Keys* 3-2
Operation Using Advanced Keyless Functions 3-7
Operation Using Advanced Key Functions 3-13
Advanced Key Suspend Function 3-17
Warning and Beep Sounds 3-18
When Warning Indicator/Beep is Activated 3-20

Doors and Locks 3-21
Keys 3-21
Keyless Entry System* 3-22
Door Locks 3-28
Liftgate 3-33
Power Windows 3-40
Fuel-Filler Lid and Cap 3-47
Hood 3-49
Moonroof* 3-50

Security System 3-53
Immobilizer System (With Advanced Key) 3-53
Immobilizer System (Without Advanced Key) 3-57
Theft-Deterrent System* 3-61

Steering Wheel and Mirrors 3-64
Steering Wheel 3-64
Mirrors 3-64

*Some models.

Advanced Keys*

The advanced keyless functions (advanced keyless entry and start system) enable the following operations while the advanced key is being carried (page 3-7).

- Locking/unlocking the doors and the liftgate without operating the key.
- Starting the engine without operating the key.

Additional functions are available using the buttons on the advanced key.
Refer to Operation Using Advanced Key Functions on page 3-13.

- The following operations are possible using the transmitter of the keyless entry system from a distance (Lock/Unlock/Panic/Liftgate* button):
  - Locking/unlocking the doors and the liftgate.
  - Opening/closing the power liftgate*.
  - Opening the power windows and the moonroof*.
  - Operating the theft-deterrent system*.
  - Turning on the alarm.
- Locking/unlocking the doors or starting the engine using the auxiliary key.

⚠ WARNING

Do not leave the key in your vehicle with children and keep them in a place where your children will not find or play with them:

Leaving children in a vehicle with the key is dangerous. This could result in someone being badly injured or even killed. Children may find these new kinds of keys to be an interesting toy to play with and could cause the power windows or other controls to operate, or even make the vehicle move.

Radio waves from the advanced key may affect medical equipment such as pacemakers:

Before using the advanced key near people who use medical equipment, ask the medical equipment manufacturer or your physician if radio waves from the advanced key will affect the equipment.

NOTE

- *The driver must carry the advanced key to ensure the system functions properly.*
- *Refer to Immobilizer System (page 3-53) for information regarding keys and engine starting.*
- ***(With theft-deterrent system)***
  Refer to Theft-Deterrent System (page 3-61) for information regarding keys and the prevention of vehicle and vehicle contents theft.

*Some models.

With power liftgate button

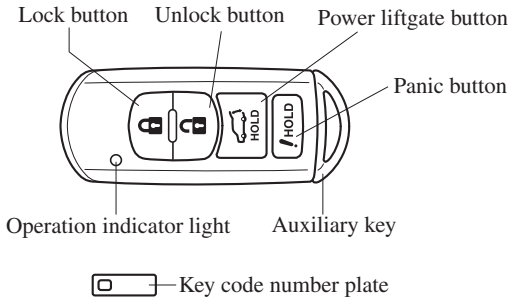

Without power liftgate button

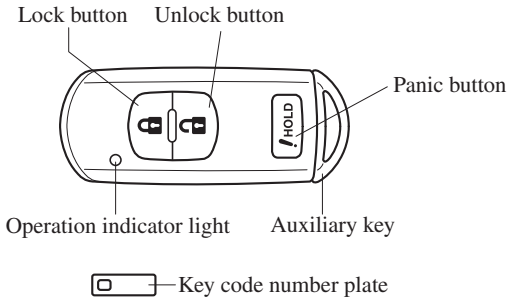

A code number is stamped on the plate attached to the key set; detach this plate and store it in a safe place (not in the vehicle) for use if you need to make a replacement key.

Also write down the code number and keep it in another safe and handy place, but not in the vehicle.

If your key is lost, consult your Authorized Mazda Dealer with the code number ready.

CAUTION

- *Because the advanced key uses low-intensity radio waves, it may not function correctly under the following conditions:*
  - *The advanced key is carried with communication devices such as cellular phones.*
  - *The advanced key contacts or is covered by a metal object.*
  - *The advanced key is near electronic devices such as personal computers or cell phones.*
  - *Non-Mazda genuine electronic equipment is installed in the vehicle.*
  - *There is equipment which discharges radio waves near the vehicle.*
  - *If the vehicle is near equipment such as wireless pay devices installed at certain gas stations.*
- *The advanced key may consume battery power excessively if it receives high-intensity radio waves. Do not place the advanced key near electronic devices such as televisions or personal computers.*
- *To avoid damage to the advanced key, DO NOT:*
  - *Drop the advanced key.*
  - *Get the advanced key wet.*
  - *Disassemble the advanced key.*
  - *Expose the advanced key to high temperatures on places such as the dashboard or hood, under direct sunlight.*
  - *Place heavy objects on the advanced key.*
  - *Put the advanced key in an ultrasonic cleaner.*
  - *Put any magnetized objects close to the advanced key.*

NOTE

- *Battery life is about one year. Be sure to replace the battery as soon as you see the green KEY indicator light in the instrument cluster begin flashing for 30 seconds after turning off the engine, otherwise, you will not be able to start the engine using the advanced keyless start system once the battery is completely dead. Refer to KEY Warning Light (Red)/KEY Indicator Light (Green) (with Advanced Key) on page 5-58. If this occurs, you will have to use the auxiliary key if you need to start the engine immediately.Refer to Advanced Key Battery Dead Warning on page 3-19.*

- *Additional advanced keys can be obtained at an Authorized Mazda Dealer. Up to 6 advanced keys can be used with the advanced keyless functions per vehicle.*

▼Advanced Key Maintenance

⚠ CAUTION

- *Make sure the battery is installed with the correct pole facing upward. Battery leakage could occur if it is not installed correctly.*
- *When replacing the battery, be careful not to touch any of the internal circuitry and electrical terminals, bend the electrical terminals, or get dirt in the transmitter as the transmitter could be damaged.*
- *There is the danger of explosion if the battery is not correctly replaced.*
- *Replace only with the same type battery (CR2025 or equivalent).*
- *Dispose of used batteries according to the following instructions.*
  - *Insulate the plus and minus terminals of the battery using cellophane or equivalent tape.*
  - *Never disassemble.*
  - *Never throw the battery into fire or water.*
  - *Never deform or crush.*

The following conditions indicate that the battery power is low:

- The KEY indicator light (green) flashes in the instrument cluster for about 30 seconds after the engine is turned off.
- The system does not operate and the operation indicator light on the transmitter does not flash when the buttons are pressed.
- The system's operational range is reduced.

Replacing the battery at an Authorized Mazda Dealer is recommended to prevent damage to the advanced key. If replacing the battery by yourself, follow the instruction below.

Replacing the advanced key battery

1. Pull out the auxiliary key.

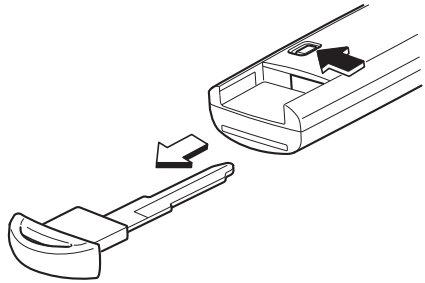

2. Insert a small, flathead screwdriver into the groove shown in the figure and rotate the screwdriver to open the cover slightly.

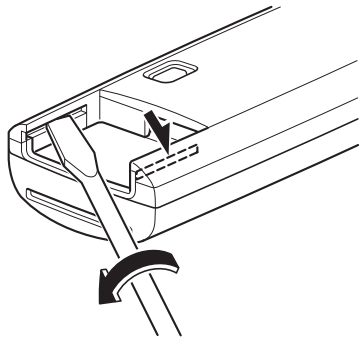

3. Insert the small, flathead screwdriver into the gap between the cover and the transmitter, and then rotate the screwdriver to detach the cover.

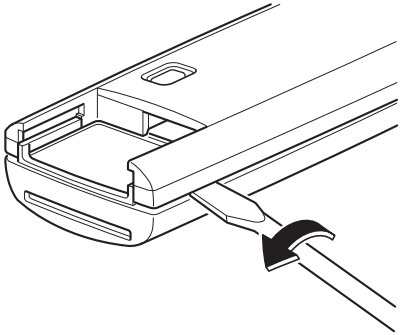

4. Remove the battery cap, then remove the battery.

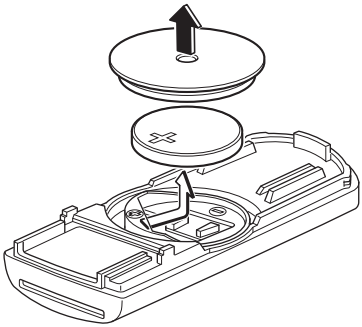

5. Insert a new battery with the positive pole facing up, and then cover the battery with the battery cap.

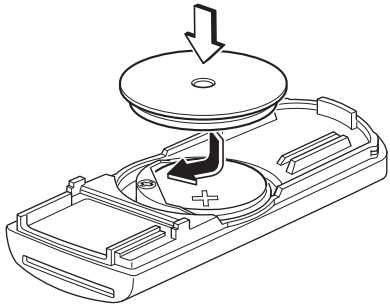

6. Close the cover.

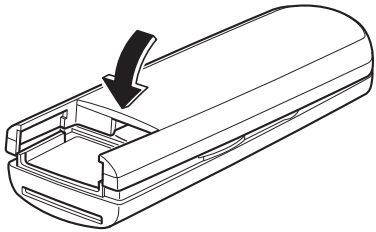

7. Reinsert the auxiliary key.

⚠ CAUTION

- *Be careful not to allow the rubber ring shown in the figure to be scratched or damaged.*
- *If the rubber ring detaches, reattach it before inserting a new battery.*

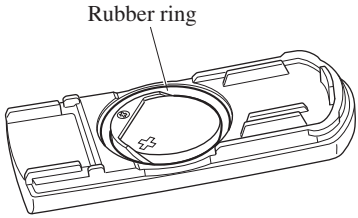

▼Service

If you have a problem with the advanced keyless functions, consult an Authorized Mazda Dealer.

If your advanced key is lost or stolen, bring all remaining advanced keys to an Authorized Mazda Dealer as soon as possible for a replacement and to make the lost or stolen advanced key inoperative.

⚠ CAUTION

Radio equipment like this is governed by laws in the United States. Changes or modifications not expressly approved by the party responsible for compliance could void the user's authority to operate the equipment.

Operation Using Advanced Keyless Functions

▼Operational Range

The system operates only when the driver is in the vehicle or within operational range while the advanced key is being carried.

NOTE

When the battery power is low, or in places where there are high-intensity radio waves or noise, the operational range may become narrower or the system may not operate.

Locking, unlocking the doors and the liftgate

The operational range for locking/unlocking the doors is an area of up to 80 cm (31 in) from the center of the front door handles.
The operational range for locking/unlocking the liftgate is an area of up to 80 cm (31 in) from the center of the liftgate.

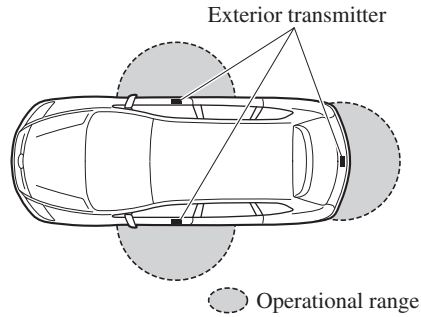

NOTE

The system may not operate if you are too close to the windows, door handles, or liftgate.

Starting the engine

The operational range for starting the engine includes nearly the entire cabin area except for the luggage compartment.

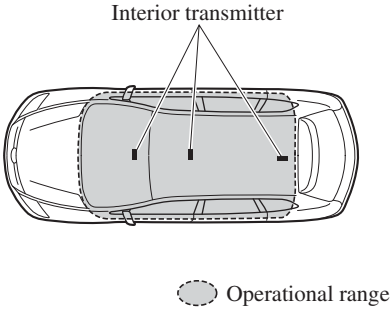

NOTE

- *The luggage compartment is out of the operational range, however, starting the engine may be possible.*
- *The engine may not start if the advanced key is placed in the following areas:*
  - *Around the dashboard*
  - *In the storage compartments such as the glove box*
- *Starting the engine may be possible even if the advanced key is outside of the vehicle and extremely close to a door and window, however, always start the engine from the driver's seat.*
  If the vehicle is started and driven away while the advanced key is not in the vehicle, the vehicle will not restart after it is turned off and the ignition is switched off.
- *If the advanced key is detected within operational range, the operation indicator light on the transmitter flashes momentarily.*

▼Locking, Unlocking with Request Switch

All doors and the liftgate can be locked/unlocked by pressing the request switch on the front doors or the liftgate while the advanced key is being carried.

Front doors

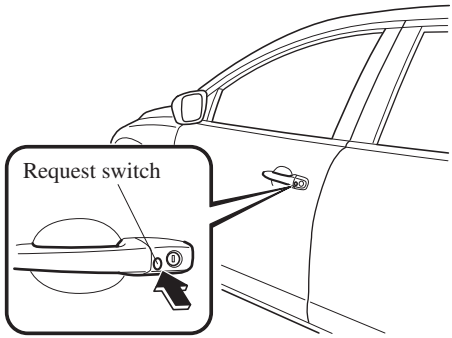

Liftgate

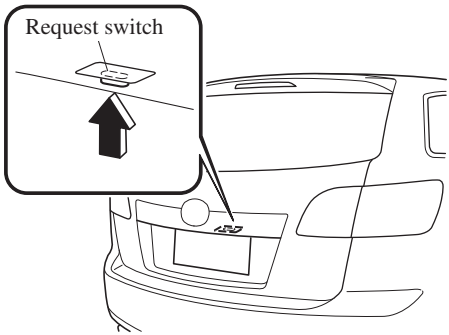

To lock

To lock the doors and the liftgate, press the request switch. A beep sound will be heard once and the hazard warning lights will flash once.

NOTE
(Without theft-deterrent system)
The hazard warning lights will flash once to indicate that the doors and the liftgate are locked.
(With theft-deterrent system)
The hazard warning lights flash when the theft deterrent system is armed.
The hazard warning lights do not flash if all the doors and the liftgate are locked before the theft-deterrent system is properly armed.
Refer to Theft-Deterrent System on page 3-61.

To unlock

Driver's door request switch

To unlock the driver's door, press the request switch. A beep sound will be heard twice and the hazard warning lights will flash twice.
To unlock all doors and the liftgate, press the request switch again within 3 seconds and two more beep sounds will be heard.

NOTE
(Without theft-deterrent system)
The hazard warning lights will flash twice to indicate that the doors and the liftgate are unlocked.
(With theft-deterrent system)
The hazard warning lights flash when the theft deterrent system is turned off.
The hazard warning lights do not flash unless the theft deterrent system has been properly turned off.
Refer to Theft-Deterrent System on page 3-61.

Front passenger door/liftgate request switch

To unlock the doors and the liftgate, press the request switch. A beep sound will be heard twice and the hazard warning lights will flash twice.

NOTE
- *The request switch on the driver's door can be used to close the power windows and the moonroof from Outside.Refer to Opening/Closing the Power Windows and the Moonroof from Outside on page 3-44.Refer to Opening/Closing the Moonroof from Outside on page 3-52.*
- *Confirm that all doors and the liftgate are securely locked.*
- *All doors and the liftgate cannot be locked when any door or the liftgate is open.*
- *A beep sound is heard for confirmation when the doors and the liftgate are locked/unlocked using the request switch. If you prefer, the beep sound can be turned off. Refer to Personalization Features on page 10-8.*
- *The system can be set to unlock all doors by performing a single operation. Refer to Personalization Features on page 10-8.*

- *The setting can be changed so that the doors and the liftgate are locked automatically without pressing the request switch (page 10-8).*
  (Auto-lock function)
  A beep sound is heard when all doors and the liftgate are closed while the advanced key is being carried. All doors and the liftgate are locked automatically after about 3 seconds when the advanced key is out of the operational range. Also, the hazard warning lights flash once. (Even if the driver is in the operational range, all doors and the liftgate are locked automatically after about 30 seconds.)
  If you are out of the operational range before the doors and the liftgate are completely closed or another advanced key is left in the vehicle, the auto-lock function will not work. Always make sure that all doors and the liftgate are closed and locked before leaving the vehicle.
  The auto-lock function does not close the power windows and the moonroof.
- ***(Auto re-lock function)***
  After unlocking doors and the liftgate by pressing the request switch, all doors and the liftgate will automatically lock if any of the following operations are not performed within about 30 seconds. If your vehicle has a theft-deterrent system, the hazard warning lights will flash for confirmation.
  - *A door or the liftgate is opened.*
  - *The auxiliary key is inserted into the ignition switch.*
  - *The start knob is pushed.*

▼Starting the Engine

Ignition switch positions

As there is no traditional key, some of the ignition switch functions are different.

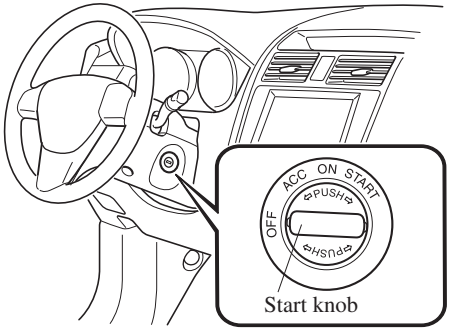

OFF—Knob Released
The power supply to electrical devices is turned off.
OFF—Knob Depressed
The ignition can be switched to ACC when the KEY indicator light (green) illuminates in the instrument cluster.

⚠ WARNING

Before leaving the driver's seat, always switch the ignition to OFF, set the parking brake and make sure the shift lever is in P:

It is important to switch the ignition to OFF even if you are not removing the key from the ignition or leaving the vehicle. Leaving the key in other positions will disable some of the vehicle security systems and run the battery down.
Leaving the driver's seat without switching the ignition to OFF, setting the parking brake and shifting the shift lever to P is dangerous. Unexpected vehicle movement could occur. This could cause an accident.

NOTE

- *If turning the ignition switch is difficult, move the steering wheel left and right.*
- *The ignition cannot be switched from ACC to OFF when the shift lever is not in P.*

ACC (Accessory)

In this position, some electrical accessories will operate.

NOTE

The Advanced Keyless Entry System does not function in the ACC position, and the doors will not lock/unlock using the transmitter or request switches even if the advanced key is carried away from the vehicle.

ON

This is the normal running position after the engine is started. The warning lights (except brakes) should be inspected before the engine is started (page 5-49).

NOTE

When the ignition is switched ON, the sound of the fuel pump motor operating near the fuel tank can be heard. This does not indicate an abnormality.

START

The engine is started in this position. It will crank until you release the start knob; then it returns to the ON position. The brake warning light can be checked after the engine is started (page 5-49).

Starting the engine

NOTE

- *Engine-starting is controlled by the spark ignition system.*
  This system meets all Canadian Interference-Causing Equipment Standard requirements regulating the impulse electrical field strength of radio noise.
- *The advanced key must be carried because the advanced key carries an immobilizer chip that must communicate with the engine controls at short range.*
- *When starting the engine, be sure the start knob is securely attached before trying to operate it. If the knob becomes detached from the ignition switch, re-attach it by pushing it on to the ignition switch.*

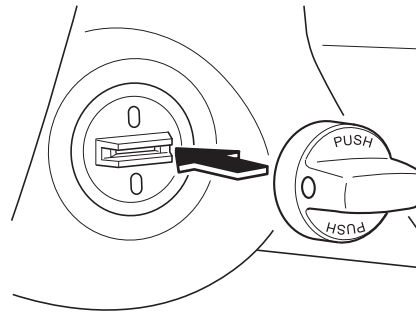

1. Make sure the advanced key is being carried.
2. Occupants should fasten their seat belts.
3. Make sure the parking brake is on.
4. Depress the brake pedal.
5. Put the vehicle in park (P). If you must restart the engine while the vehicle is moving, shift into neutral (N).

NOTE
The starter will not operate if the shift lever is not in P or N.

6. Push the start knob slowly all the way in.

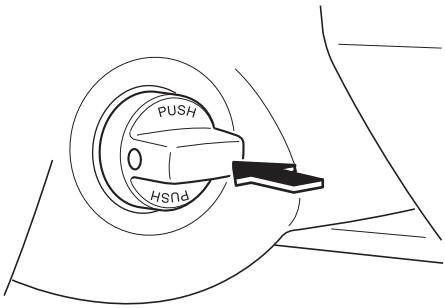

7. Verify that the KEY indicator light (green) illuminates in the instrument cluster. The KEY warning light (red) means you cannot continue to start the engine using the Advanced Keyless System. You may have to use the auxiliary key instead (page 3-20).

NOTE
In the following cases, the KEY warning light (red) illuminates and the engine will not start.
- *The advanced key battery is dead.*
- *The advanced key is out of operational range.*
- *The advanced key is placed in areas where it is difficult for the system to detect the signal (page 3-7).*
- *A key from another manufacturer similar to the advanced key is in the operational range.*

8. Switch the ignition to ACC while pushing the start knob in.

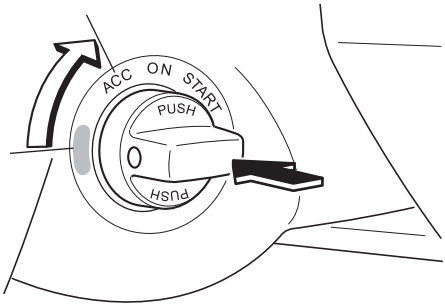

9. Switch the ignition from ACC to START and hold (up to 10 seconds at a time) until the engine starts.

⚠ CAUTION

Do not try the starter for more than 10 seconds at a time. If the engine stalls or fails to start, wait 10 seconds before trying again. Otherwise, you may damage the starter and drain the battery.

10. After starting the engine, let it idle for about 10 seconds.

NOTE
- *In extremely cold weather or after the vehicle has not been driven in several days, let the engine warm up without operating the accelerator.*
- *Whether the engine is cold or warm, it should be started without use of the accelerator.*

Turning the engine off

1. Move the shift lever to the P position.
2. Switch the ignition from ON to ACC.

NOTE
When the engine is turned off and the ignition is switched from ACC to OFF, the KEY indicator light (green) flashes in the instrument cluster for about 30 seconds if the battery power of the advanced key is low. Replace the battery with a new one.
Refer to Battery Replacement (page 3-7).

3. Push in the start knob from the ACC position and turn it to the OFF.

⚠ CAUTION

When leaving the vehicle, make sure the ignition is switched to OFF.

NOTE
- *When switching the ignition to OFF, the ignition switch has to be pushed in from the ACC position and turned. Without being pushed in, the ignition switch stops at the ACC position and the vehicle battery may be discharged if the ignition switch is left in the ACC position. When leaving the vehicle, make sure the ignition is switched to OFF.*
- *If the vehicle is left with the ignition not switched to OFF, a beep sound is heard and the indicator light flashes to notify the driver.*
  Refer to Warning Beep (page 3-18).

Operation Using Advanced Key Functions

▼Keyless Entry System

This system uses the more traditional keyless entry buttons to remotely lock and unlock the doors and the liftgate, and opens the power windows and the moonroof.
It can also help you signal for attention.
Press the buttons slowly and carefully.

NOTE
- *The keyless entry system is designed to operate up to about 2.5 m (8 ft) from the center of the vehicle, but this may vary due to local conditions.*
- *The system does not operate when the auxiliary key is in the ignition switch.*
- *With the start knob in the OFF position, the system is fully operational. If the ignition is not switched off or the start knob is pushed in, the system does not operate.*
- *All doors and the liftgate cannot be locked by pressing the lock button while any door or the liftgate is open. The hazard warning lights will also not flash.*
- *If the transmitter does not operate when pressing a button or the operational range becomes too small, the battery may be dead. To install a new battery, refer to Maintenance (page 3-5).*

Transmitter

with power liftgate

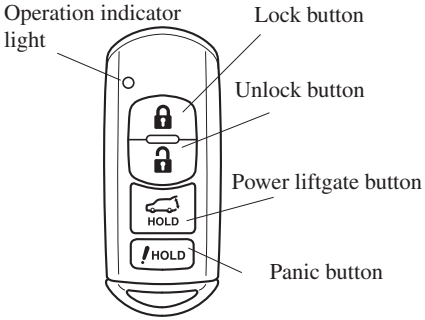

without power liftgate

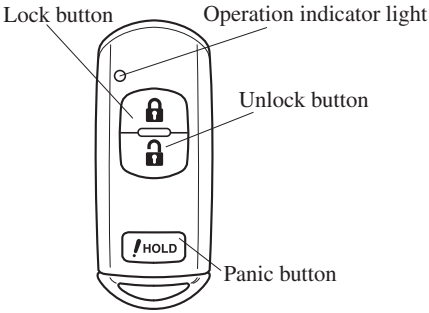

NOTE

The unlock button can be used to open the power windows and the moonroof, but the lock button cannot be used to close the power windows and the moonroof.
Refer to the following pages:
Opening/Closing the Power Windows (page 3-44)
Opening/Closing the moonroof (page 3-52)

The operation indicator light flashes when the buttons are pressed.

Lock button

To lock the doors and the liftgate, press the lock button. A beep sound will be heard once and the hazard warning lights will flash once.

To confirm that all doors and the liftgate have been locked, press the lock button again within 5 seconds. If they are closed and locked, the horn will sound.

NOTE

- *A beep sound can be heard for confirmation when the doors are locked using the advanced keyless transmitter. If you prefer, the beep sound can be turned off.*
  Refer to Personalization Features on page 10-8.
- ***(Without theft-deterrent system)***
  The hazard warning lights will flash once to indicate that all doors and the liftgate are locked.
  (With theft-deterrent system)
  The hazard warning lights flash when the theft deterrent system is armed.
  The hazard warning lights do not flash if all the doors and the liftgate are locked before the theft-deterrent system is properly armed.
  When the doors are locked by pressing the lock button on the transmitter while the theft-deterrent system is armed, the hazard warning lights will flash once to indicate that the system is armed.
  Refer to Theft-Deterrent System on page 3-61.

NOTE

- *All doors and the liftgate cannot be locked when any door or the liftgate is open.*
- *Confirm that all doors and the liftgate are locked visually or audibly by use of the double click.*

Unlock button

To unlock the driver's door, press the unlock button. A beep will be heard twice and the hazard warning lights will flash twice.

To unlock all doors and the liftgate, press the unlock button again within 3 seconds and two more beep sounds will be heard.

NOTE

- *A beep sound can be heard for confirmation when the doors are unlocked using the advanced keyless transmitter. If you prefer, the beep sound can be turned off.*
  Refer to Personalization Features on page 10-8.
- *The system can be set to unlock all doors by performing a single operation.*
  Refer to Personalization Features on page 10-8.
- ***(Without theft-deterrent system)***
  The hazard warning lights will flash twice to indicate that all doors and the liftgate are unlocked.
  (With theft-deterrent system)
  The hazard warning lights flash when the theft deterrent system is turned off.
  The hazard warning lights do not flash unless the theft deterrent system has been properly turned off.
  When the doors are unlocked by pressing the unlock button on the transmitter while the theft-deterrent system is turned off, the hazard warning lights will flash twice to indicate that the system is turned off.
  Refer to Theft-Deterrent System on page 3-61.

NOTE

(Auto re-lock function)

After unlocking with the transmitter, all doors and the liftgate will automatically lock if any of the following operations are not performed within about 30 seconds. If your vehicle has a theft-deterrent system, the hazard warning lights will flash for confirmation.
The time required for the doors to lock automatically can be changed.
Refer to Personalization Features on page 10-8.

- *A door or the liftgate is opened.*
- *The auxiliary key is inserted into the ignition switch.*
- *The start knob is pressed.*

Power liftgate button

If your Mazda has a power liftgate (page 3-35), the transmitter can open/close the liftgate.

Panic button

If you witness from a distance someone attempting to break into or damage your vehicle, pressing the panic button will activate the vehicle's alarm.

NOTE

The panic button will work whether any door or the liftgate is open or closed.

(Turning on the alarm)

Pressing the panic button for 1 second or more will trigger the alarm for about 2 minutes and 30 seconds, and the following will occur:

- The horn sounds intermittently.
- The hazard warning lights flash.

(Turning off the alarm)

The alarm stops by pressing any button on the transmitter.

Declaration of Conformity

Keyless entry system

(U.S.A)
FCC WARNING
Changes or modifications not expressly approved by the party responsible for compliance could void the user's authority to operate the equipment.
Note
*This device complies with Part 15 of the FCC Rules. Operation is subject to the following two conditions:
(1) this device may not cause harmful interference, and (2) this device must accept any interference received, including interference that may cause undesired operation.

(CANADA)
This device complies with RSS-210 of Industry CANADA. Operation is subject to the following two conditions: (1) this device may not cause interference, and (2) this device must accept any interference, including interference that may cause undesired operation of the device.

(MEXICO)
Este equipo opera a titulo secundario, consecuentemente, debe aceptar interferencias perjudiciales incluyendo equipos de la misma clase y puede no causar interferencias a sistemas operando a titulo primario

Sistema de arranque y de acceso avanzado sin llave
Modelo : SKE11A-04
Sistema de arranque y de acceso avanzado sin llave con marcado de confirmación por radio

COFETEL RLVMASK08-1120

▼Auxiliary Key Function

Use the auxiliary key stored in the advanced key in the event of a dead transmitter battery or malfunction.

Removing the auxiliary key

Pull out the auxiliary key from the advanced key.

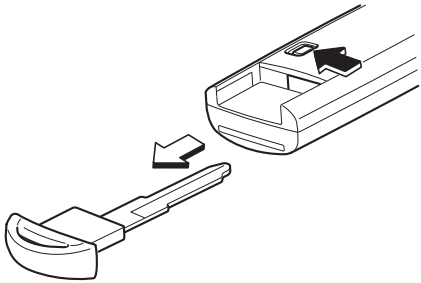

Locking, unlocking the doors

The doors can be locked/unlocked using the auxiliary key, refer to Locking, Unlocking with Key (page 3-28).

Starting the engine

The engine can be started with the auxiliary key, refer to Ignition Switch (page 5-2).

Locking, unlocking the glove box

The glove box can be locked/unlocked using the auxiliary key, refer to Glove Box (page 6-172).

Advanced Key Suspend Function

If one advanced key is left in the vehicle and a second advanced key is used to lock it, the functions of the advanced key left in the vehicle are temporarily suspended to prevent theft of the vehicle.
The following are inoperable:

- Starting the engine using the start knob.
- Operating the request switches.

To restore these functions, perform any one of the following:

- Press the lock or unlock button on the advanced key which has had its functions temporarily suspended.
- While carrying another advanced key, push in the start knob until the KEY indicator light (green) illuminates.
- Insert the auxiliary key and switch the ignition ON.

Warning and Beep Sounds

▼System Malfunction Warning Beep

If any malfunction occurs in the advanced keyless function, the KEY warning light (red) in the instrument cluster illuminates continuously and beep sounds will be heard.

⚠ CAUTION

If the KEY warning light (red) remains illuminated, do not continue to drive the vehicle with the advanced keyless function. Park the vehicle in a safe place and use the auxiliary key to continue driving the vehicle. Have the vehicle inspected at an Authorized Mazda Dealer as soon as possible. Refer to Ignition Switch (page 5-2).

▼Ignition Not Switched Off Warning Beep

If the driver's door is opened while the ignition is switched to ACC, a continuous beep sound will be heard to notify the driver that the ignition has not been switched off. Left in this condition, the keyless entry system will not operate, the car cannot be locked, and the battery power will be depleted.

▼Advanced Key Removed from Vehicle Warning Beep

Under the following conditions, a beep sound will be heard and the KEY warning light (red) will flash continuously when the ignition has not been switched off to notify the driver that the advanced key has been removed. The KEY warning light (red) will stop flashing when the advanced key is back inside the vehicle:

- The ignition has not been switched off, the driver's door is open, and the advanced key is removed from the vehicle. (A beep sound will be heard 3 times.)
  However the beep sound will be heard continuously when the ignition is switched to ACC and the door is open due to the activation of the warning beep sound indicating that the ignition is not switched off.
- The ignition has not been switched off and all the doors are closed after removing the advanced key from the vehicle. (A beep sound will be heard 6 times.)

NOTE

Because the advanced key utilizes low-intensity radio waves, the Advanced Key Removed From Vehicle Warning may activate if the advanced key is carried together with a metal object or it is placed in a poor signal reception area within the vehicle.

▼Request Switch Inoperable Warning Beep

If the request switch for a front door or the liftgate is pressed under the following conditions while the advanced key is being carried, a beep will be heard 6 times to indicate that the front doors and the liftgate cannot be locked.

- A door or the liftgate is open (door ajar included).
- The ignition has not been switched off.
- The auxiliary key is inserted into the ignition switch.

▼Advanced Key Battery Dead Warning

When the ignition is switched to ACC or switched off from ON, the KEY indicator light (green) flashes for approximately 30 seconds indicating that the remaining battery power is low. Replace with a new battery before the advanced key becomes unusable.
Refer to Advanced Key Maintenance (page 3-5).

NOTE
The advanced key can be set so that the KEY indicator light (green) does not flash even if the battery power is low.
Refer to Personalization Features on page 10-8.

▼Engine Start Not Permitted Warning

Under the following conditions, the KEY warning light (red) flashes to inform the driver that the ignition cannot be switched from off.

- The advanced key battery is dead.
- The advanced key is not within operational range.
- The advanced key is placed in areas where it is difficult for the system to detect the signal (page 3-7).
- A key from another manufacturer similar to the advanced key is in the operational range.

▼Advanced Key Left-in-vehicle Warning Beep

If an advanced key is left in the vehicle cabin and all the doors and the liftgate are locked using a separate advanced key, a beep sound is heard for about 10 seconds to remind the driver that the advanced key has been left in the vehicle cabin. If this happens, the doors and the liftgate lock but the functions of the advanced key left in the vehicle cabin may be temporarily suspended. Perform the following procedure to restore the functions of the advanced key (page 3-17).

When Warning Indicator/Beep is Activated

Under the following conditions, warning beeps are heard and a warning/indicator light in the instrument cluster illuminates to notify the driver of improper operation of the advanced key to prevent theft of the vehicle (page 3-18).

Warning	How to check
When a door is open, a continuous beep sound will be heard.	Check whether the ignition has been switched off.
When a door is open, 3 beep sounds are heard, and the KEY warning light (red) in the instrument cluster flashes.	Check whether the advanced key has been removed from the vehicle.
When a door is closed, a beep sound is heard 6 times, and the KEY warning light (red) in the instrument cluster flashes.	Check whether the advanced key has been removed from the vehicle.
When locking the doors , the chime sounds for about ten seconds.	Check whether the advanced key has been left in the vehicle.
When attempting to lock the doors by pressing the request switch on the front doors, and six beep sounds are heard.	Check whether the advanced key has been left in the vehicle.
	Check whether the ignition has been switched off.
	Check whether a door or the liftgate is open.
When the KEY indicator light (green) flashes in the instrument cluster.	The advanced key battery power is low. Replace the battery with a new one. Refer to Advanced Key Maintenance on page 3-5.
When the KEY warning light (red) remains illuminated in the instrument cluster.	The advanced key is malfunctioning. Park the vehicle in a safe place, and use the auxiliary key to continue driving the vehicle. Have the vehicle inspected at an Authorized Mazda Dealer as soon as possible.

Keys

WARNING

Do not leave the key in your vehicle with children and keep them in a place where your children will not find or play with them:

Leaving children in a vehicle with the key is dangerous. This could result in someone being badly injured or even killed. Children may find these new kinds of keys to be an interesting toy to play with and could cause the power windows or other controls to operate, or even make the vehicle move.

NOTE

- *Refer to Immobilizer System (page 3-57) for information regarding keys and engine starting.*
- ***(With theft-deterrent system)***
  Refer to Theft-Deterrent System (page 3-61) for information regarding keys and the prevention of vehicle and vehicle contents theft.

The keys operate all locks.

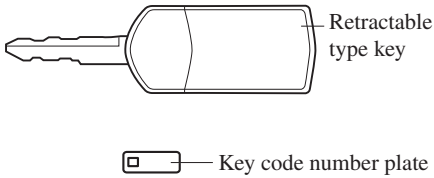

A code number is stamped on the plate attached to the key set; detach this plate and store it in a safe place (not in the vehicle) for use if you need to make a replacement key.

NOTE

- *Write down the code number and keep it in a separate, safe and convenient place, but not in the vehicle.*
  If your key is lost, consult your Authorized Mazda Dealer and have your code number ready.
- *Some types of key chains cannot be attached to the retractable type key. In this case, use the key ring provided with the transmitter which has the key code number plate attached.*

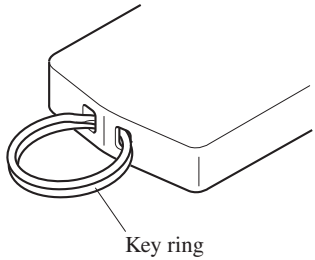

Key extend/retract method (Retractable type key)

To extend the key, press the release button.

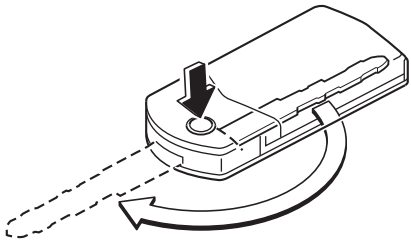

To retract the key, rotate it into the holder while pressing the release button.

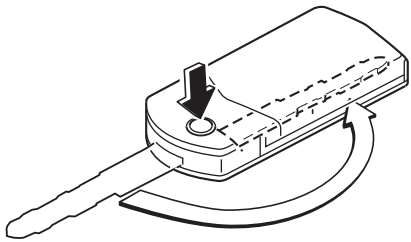

Keyless Entry System *

This system remotely locks and unlocks the doors and the liftgate, and opens the power windows and the moonroof.
It can also help you signal for attention.
Press the buttons slowly and carefully.

CAUTION

To avoid damage to the transmitter, do not:
- *Drop the transmitter.*
- *Get the transmitter wet.*
- *Disassemble the transmitter.*
- *Expose the transmitter to any kind of magnetic field.*
- *Expose the transmitter to high temperatures on places such as the dashboard or hood, under direct sunlight.*

NOTE
- *The keyless entry system is designed to operate up to about 2.5 m (8 ft) from the center of the vehicle, but this may vary due to local conditions.*
- *The system does not operate when the key is in the ignition switch.*
- *If the transmitter does not operate when pressing a button or the operation range becomes too small, the battery may be dead. To install a new battery, refer to Maintenance (page 3-24).*
- *Additional transmitters can be obtained at an Authorized Mazda Dealer. Up to 3 transmitters can be used with the keyless entry system per vehicle. Bring all transmitters to an Authorized Mazda Dealer when additional transmitters are required.*

*Some models.

▼Transmitter

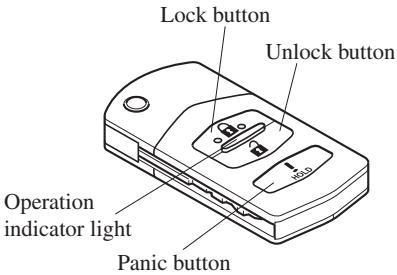

NOTE
The unlock button can be used to open the power windows and the moonroof, but the lock button cannot be used to close the power windows and the moonroof.
Refer to Opening/Closing the Power Windows and the moonroof from Outside (page 3-44).

The operation indicator light flashes when the buttons are pressed.

Lock button

To lock the doors and the liftgate, press the lock button and the hazard warning lights will flash once.

To confirm that all doors and the liftgate have been locked, press the lock button again within 5 seconds. If they are closed and locked, the horn will sound and the hazard warning lights will flash once.

NOTE
- *Doors and the liftgate can be locked by pressing the lock button while any other door or the liftgate is open. Also, the hazard warning lights will not flash and the horn will not sound.*
- ***(Without theft-deterrent system)***
  The hazard warning lights will flash once to indicate that all doors and the liftgate are locked.
  (With theft-deterrent system)
  The hazard warning lights flash when the theft deterrent system is armed.
  The hazard warning lights do not flash if all the doors and the liftgate are locked before the theft-deterrent system is properly armed.
  When the doors are locked by pressing the lock button on the transmitter while the theft-deterrent system is armed, the hazard warning lights will flash once to indicate that the system is armed.
  Refer to Theft-Deterrent System on page 3-61.
- *All doors and the liftgate cannot be locked when the key is in the ignition switch.*
- *Confirm that all doors and the liftgate are locked visually or audibly by use of the double click.*

Unlock button

To unlock the driver's door, press the unlock button and the hazard warning lights will flash twice.

To unlock all doors and the liftgate, press the unlock button again within 3 seconds and the hazard warning lights will flash twice.

NOTE
(Without theft-deterrent system)
The hazard warning lights will flash twice to indicate that all doors and the liftgate are unlocked.
(With theft-deterrent system)
The hazard warning lights flash when the theft deterrent system is turned off.
The hazard warning lights do not flash unless the theft deterrent system has been properly turned off.
When the doors are unlocked by pressing the unlock button on the transmitter while the theft-deterrent system is turned off, the hazard warning lights will flash twice to indicate that the system is turned off.
Refer to Theft-Deterrent System on page 3-61.

NOTE
Auto re-lock function
After unlocking with the transmitter, all doors and the liftgate will automatically lock if one of the doors or the liftgate is not opened within about 30 seconds.

Panic button

If you witness from a distance someone attempting to break into or damage your vehicle, pressing the panic button will activate the vehicle's alarm.

NOTE
The panic button will work whether any door or the liftgate is open or closed.

Turning on the alarm

Pressing the panic button once will trigger the alarm for about 2 minutes and 30 seconds, and the following will occur:
- The horn sounds intermittently.
- The hazard warning lights flash.

Turning off the alarm

Press any button on the transmitter.

▼Transmitter Maintenance

If the buttons on the transmitter are inoperable and the operation indicator light does not flash, the battery may be dead.
Replace with a new battery before the transmitter becomes unusable.

⚠ CAUTION

- *Install the battery with the positive pole (+) facing down. Battery leakage could occur if it is not installed correctly.*
- *When replacing the battery, be careful not to touch any of the internal circuitry and electrical terminals, bend the electrical terminals, or get dirt in the transmitter as the transmitter could be damaged.*
- *There is the danger of explosion if the battery is not correctly replaced.*
- *Replace only with the same type battery (CR1620 or equivalent).*
- *Dispose of used batteries according to the following instructions.*
  - *Insulate the plus and minus terminals of the battery using cellophane or equivalent tape.*
  - *Never disassemble.*
  - *Never throw the battery into fire and/or water.*
  - *Never deform or crush.*

Replacing the transmitter battery

1. Unfold the key (page 3-21).

2. Insert a screwdriver into the slot and push the tab to remove the key from the transmitter.

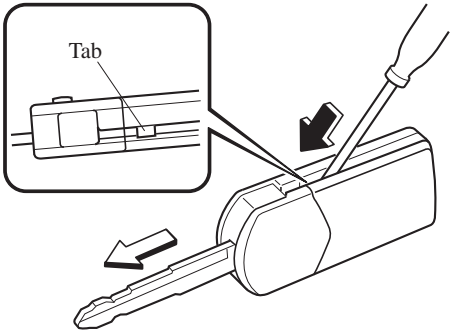

3. Insert a screwdriver into the slot and gently pry open the transmitter.

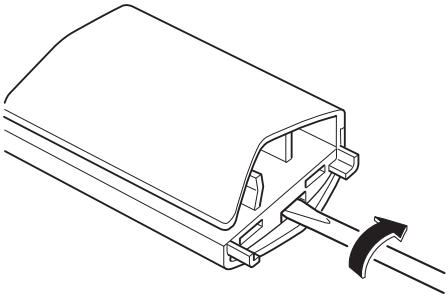

4. Remove the battery.

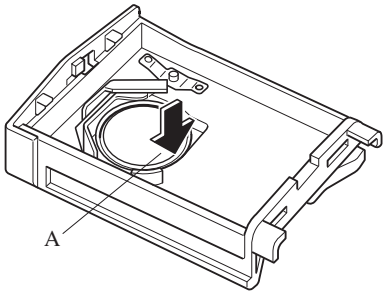

5. Put in the new battery (CR1620 or equivalent) with the positive pole (+) facing down.

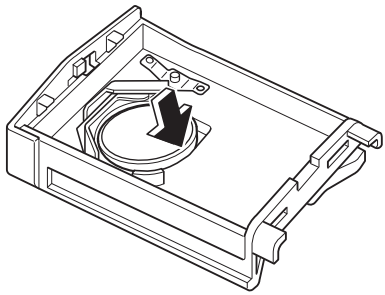

6. Align the front and back covers and snap the transmitter shut.
7. Align the key with the transmitter as shown in the figure, and insert the key until a click sound is heard.

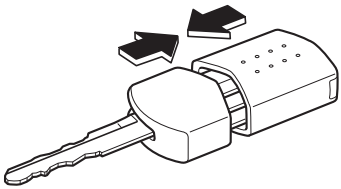

⚠ CAUTION

Insert the key into the transmitter securely until a click sound is heard. If it is not inserted securely, it could detach from the transmitter.

▼Service

If you have a problem with the keyless entry system, consult an Authorized Mazda Dealer.

If your transmitter is lost or stolen, consult an Authorized Mazda Dealer as soon as possible for a replacement and to make the lost or stolen transmitter inoperative.

⚠ CAUTION

Radio equipment like this is governed by laws in the United States. Changes or modifications not expressly approved by the party responsible for compliance could void the user's authority to operate the equipment.

▼Declaration of Conformity

Keyless entry system

(U.S.A)
FCC WARNING
Changes or modifications not expressly approved by the party responsible for compliance could void the user's authority to operate the equipment.
Note
*This device complies with Part 15 of the FCC Rules. Operation is subject to the following two conditions:
(1) this device may not cause harmful interference, and (2) this device must accept any interference received, including interference that may cause undesired operation.

(CANADA)
This device complies with RSS-210 of Industry CANADA. Operation is subject to the following two conditions: (1) this device may not cause interference, and (2) this device must accept any interference, including interference that may cause undesired operation of the device.

(MEXICO)
Este equipo opera a titulo secundario, consecuentemente, debe aceptar interferencias perjudiciales incluyendo equipos de la misma clase y puede no causar interferencias a sistemas operando a titulo primario

Sistema de acceso normal sin llave
Modelo : SKE125-01
Sistema de acceso normal sin llave con marcado de confirmación por radio

COFETEL RCPMAIM05-615

Door Locks

WARNING

Always take all children and pets with you or leave a responsible person with them:

Leaving a child or a pet unattended in a parked vehicle is dangerous. In hot weather, temperatures inside a vehicle can become high enough to cause brain damage or even death.

Do not leave the key in your vehicle with children and keep them in a place where your children will not find or play with them:

Leaving children in a vehicle with the key is dangerous. This could result in someone being badly injured or even killed.

Keep all doors locked when driving:

Unlocked doors in a moving vehicle are dangerous. Passengers can fall out if a door is accidentally opened and can more easily be thrown out in an accident.

Always close all the windows and the moonroof, lock the doors and take the key with you when leaving your vehicle unattended:

Leaving your vehicle unlocked is dangerous as children could lock themselves in a hot vehicle, which could result in death. Also, a vehicle left unlocked becomes an easy target for thieves and intruders.

After closing the doors, always verify that they are securely closed:

Doors not securely closed are dangerous, if the vehicle is driven with a door not securely closed, the door could open unexpectedly resulting in an accident.

Always confirm the safety around the vehicle before opening a door:

Suddenly opening a door is dangerous. A passing vehicle or a pedestrian could be hit and cause an accident.

▼Locking, Unlocking with Key

The driver's door can be locked/unlocked with the key.
Turn the key toward the front to unlock, toward the back to lock.

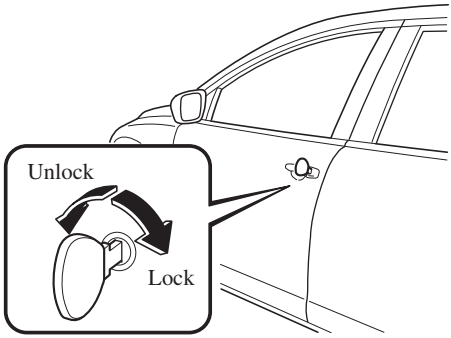

▼Locking, Unlocking with Request Switch (With Advanced Key)

The doors can be locked/unlocked by operating the request switch while carrying the advanced key outside the vehicle, refer to Operations Using Advanced Keyless Functions (page 3-7).

▼Locking, Unlocking with Transmitter (With Advanced Key)

The doors can be locked/unlocked by operating the keyless entry system transmitter, refer to Keyless Entry System (page 3-13).

▼Locking, Unlocking with Transmitter (With Retractable Type Key)

The doors can be locked/unlocked by operating the keyless entry system transmitter, refer to Keyless Entry System (page 3-22).

▼Locking, Unlocking with Door-Lock Knob

To lock any door from the inside, press the door-lock knob.
To unlock, pull it outward.
This does not operate the other door locks.

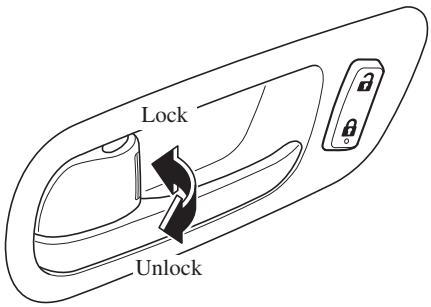

To lock any door with the door-lock knob from the outside, press the door-lock knob to the lock position and close the door.
This does not operate the other door locks.

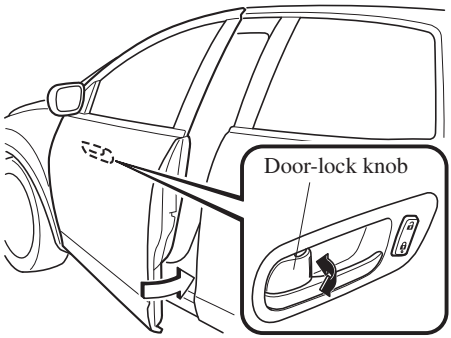

NOTE

- *When locking the doors this way, be careful not to leave the key inside the vehicle.*
- ***(With advanced key)***
  The driver's door cannot be locked using the door-lock knob from the outside.
- ***(With retractable type key)***
  The driver's door cannot be locked using the door-lock knob from the outside if the key is in the ignition switch.

▼Power Door Locks

<u>Vehicle lock-out prevention</u>

(With advanced key)
The vehicle lock-out prevention feature prevents you from locking yourself out of the vehicle. All doors and the liftgate will automatically unlock if they are locked using the power door locks with any door or the liftgate open.

(With retractable type key)
The vehicle lock-out prevention feature prevents you from locking yourself out of the vehicle. With the key in the ignition switch, all doors and the liftgate will automatically unlock if they are locked using the power door locks with any door or the liftgate open.

Locking, unlocking with key

All doors and the liftgate lock automatically when the driver's door is locked with the key.
All doors and the liftgate unlock when the driver's door is unlocked and the key is held in the unlock position for one second or longer.

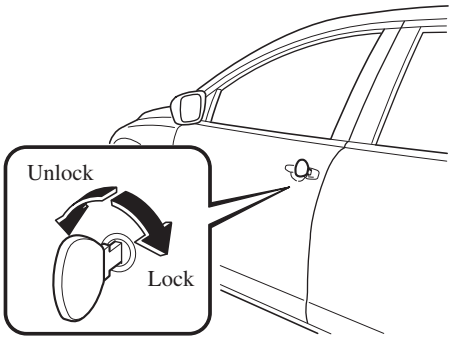

NOTE
Holding the key in the unlocked position in the driver's door lock for about a second unlocks all doors and the liftgate. To unlock only the driver's door, insert the key into the driver's door lock and turn the key briefly to the unlock position and then immediately return it to the center position.

Locking, unlocking with door-lock switch

All doors and the liftgate lock automatically when lock side is pressed. They all unlock when unlock side is pressed.

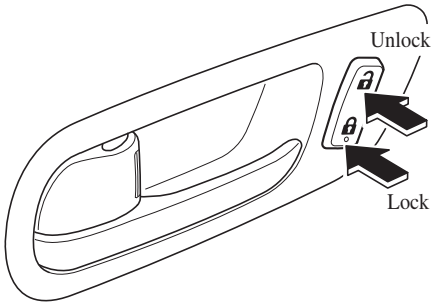

Locking, unlocking with request switch (with advanced key)

All doors and the liftgate can be locked/unlocked by operating the request switch on the front doors and the liftgate while carrying the advanced key outside the vehicle, refer to Operations Using Advanced Keyless Functions (page 3-7).

Locking, unlocking with transmitter (with advanced key)

All doors and the liftgate can be locked/unlocked by operating the keyless entry system transmitter, refer to Keyless Entry System (page 3-13).

Locking, unlocking with transmitter (with retractable type key)

All doors and the liftgate can be locked/unlocked by operating the keyless entry system transmitter, refer to Keyless Entry System (page 3-22).

Auto lock/unlock function

WARNING

Do not pull the inner handle on a front door:

Pulling an inner handle on a front door while the vehicle is moving is dangerous. Passengers can fall out of the vehicle if a front door accidentally opens, which could result in death or serious injury.

- When the vehicle speed exceeds 20 km/h (12 mph), all doors and the liftgate lock automatically.
- When the ignition is switched off, all doors and the liftgate unlock automatically.

These functions can also be disabled so that they do not operate.

Auto lock/unlock function setting change using door-lock switch

The doors and the liftgate can set to lock or unlock automatically by selecting any one of the functions from the following table and using the driver's door-lock switch on the interior to perform the setting change as indicated in the procedure which follows.

Settings can be changed using the following operation.

Function number	Function
1	The auto door-lock function is disabled.
2	All the doors and the liftgate lock automatically when the vehicle speed is about 20 km/h (12 mph) or more.
3	All the doors and the liftgate lock automatically when the vehicle speed is about 20 km/h (12 mph) or more. All the doors and the liftgate unlock when the ignition is switched from ON to ACC or Off.
4	When the ignition is switched ON and the shift lever is shifted from park (P) to any other gear position, all the doors and the liftgate lock automatically.
5	When the ignition is switched ON and the shift lever is shifted from park (P) to any other gear position, all the doors and the liftgate lock automatically. When the shift lever is shifted to park (P) while the ignition is switched ON, all the doors and the liftgate unlock automatically.

1. Stop the vehicle and close all the doors.
2. Switch the ignition ON.
3. Press and hold the lock side of the driver's door-lock switch within 10 seconds of switching the ignition ON, and make sure a beep sound is heard about eight seconds afterwards.
4. Referring to the auto lock/unlock function setting table, determine the function number for the desired setting and press the unlock side of the driver's door-lock switch only in the amount of the selected function number (Ex. If you select function 2, press the unlock side of the switch only 2 times).

NOTE
There are only a total of five auto lock/unlock settings available. Be sure to press the unlock side of the driver's door-lock switch the correct number of times according to the selected function number. If the switch is mistakenly pressed six times, the procedure will be invalidated. If this occurs, start the procedure from the beginning.

5. Three seconds after the function setting has been changed, a beep sound will beep in the amount of the selected function number.

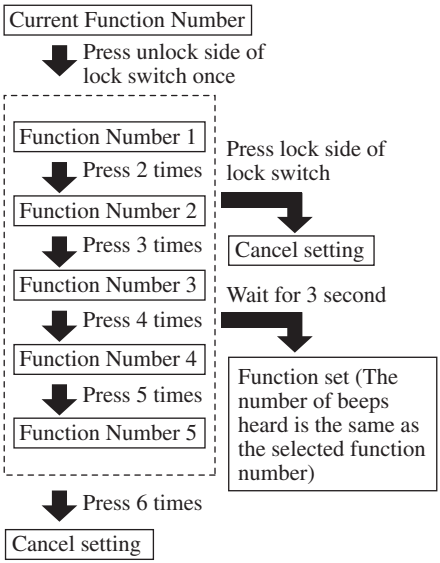

NOTE
- *The doors cannot be locked or unlocked while the setting function is being performed.*
- *The procedure can be cancelled by pressing the lock side of the driver's door-lock switch.*

▼Rear Door Child Safety Locks

These locks are intended to help prevent children from accidentally opening the rear doors. Use them both whenever a child rides in the vehicle.

If you slide the child safety lock to the lock position before closing that door, the door cannot be opened from the inside. The door can be opened only by pulling the outside handle.

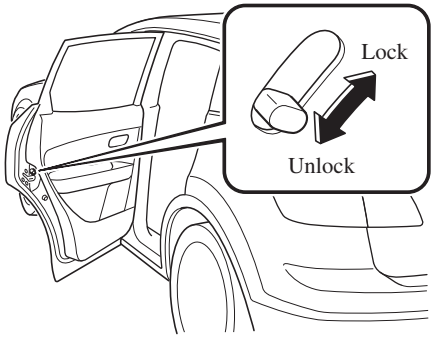

Liftgate

WARNING

Never allow a person to ride in the luggage compartment:

Allowing a person to ride in the luggage compartment is dangerous. The person in the luggage compartment could be seriously injured or killed during sudden braking or a collision.

Do not drive with the liftgate open:

Exhaust gas in the cabin of a vehicle is dangerous. An open liftgate in a moving vehicle will cause exhaust gas to be drawn into the cabin. This gas contains CO (carbon monoxide), which is colorless, odorless, and highly poisonous, and it can cause loss of consciousness and death. Moreover, an open liftgate could cause occupants to fall out in an accident.

Do not stack or leave loaded luggage unsecured in the luggage compartment:

Otherwise, the luggage may move or collapse, resulting in injury or an accident. In addition, do not load luggage higher than the seatbacks. It may affect the side or rear field of view.

CAUTION

- *When loading or unloading luggage in the luggage compartment, turn off the engine. Otherwise, you could get burned by the heat of the exhaust gas.*
- *Be careful not to apply excessive force to the damper stay on the liftgate such as by putting your hand on the stay. Otherwise, the damper stay may bend and affect the liftgate operation.*

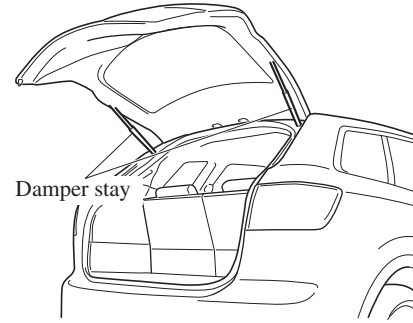

▼Locking, Unlocking with Request Switch (With Advanced Key)

The liftgate can be locked/unlocked by operating the request switch while carrying the advanced key outside the vehicle, refer to Operations Using Advanced Keyless Functions (page 3-7).

▼Locking, Unlocking with Transmitter (With Advanced Key)

The liftgate can be locked/unlocked by operating the keyless entry system transmitter, refer to Keyless Entry System (page 3-13).

▼Locking, Unlocking with Transmitter (With Retractable Type Key)

The liftgate can be locked/unlocked by operating the keyless entry system transmitter, refer to Keyless Entry System (page 3-22).

▼Locking, Unlocking with Door-Lock Switch

The liftgate can be locked/unlocked by operating the door-lock switch, refer to Power Door Locks (page 3-29).

▼Opening and Closing the Liftgate

Manually opening the liftgate

⚠ WARNING

Always fully open the liftgate when opening it:

Raising the liftgate only partially is dangerous as it could drop unexpectedly resulting in injury.

Pull up on the handle.

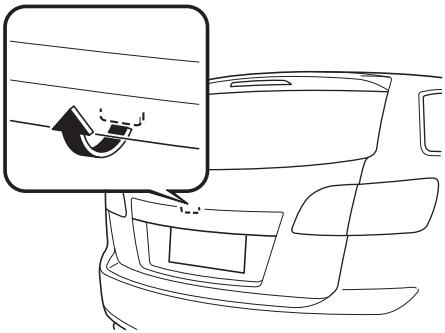

NOTE

If the vehicle battery is dead or there is a malfunction in the electrical system and the liftgate cannot be unlocked, perform the following procedure as an emergency measure to unlock it:

1. *Remove the cap on the interior surface of the liftgate with a flathead screwdriver.*

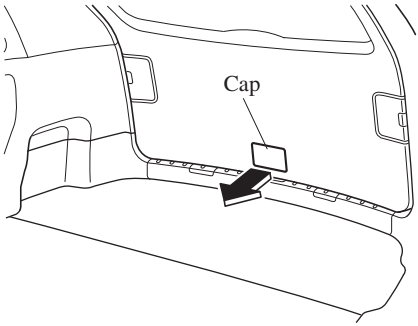

2. ***(With power liftgate)***
   Push the liftgate while pressing the lever down.
   (Without power liftgate)
   Turn the lever to the right to unlock the liftgate

(With power liftgate)

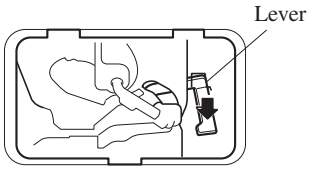

(Without power liftgate)

Lever

After performing this emergency measure, have the vehicle inspected at an Authorized Mazda Dealer as soon as possible.

Manually closing the liftgate

Use both hands to push the liftgate down until the lock snaps shut. Do not slam it. Pull up on the liftgate to make sure it is securely latched.

▼Power Liftgate*

The power liftgate opens/closes electrically by operating switches in the vehicle or the buttons on the keyless entry system transmitter.
Refer to Keyless Entry System on page 3-13.

⚠ WARNING

Be sure to watch the power liftgate as it opens or closes, and make sure that it closes completely:

Opening or closing the power liftgate while not watching it move is dangerous. Because of unseen obstacles and the jam-safe feature, a liftgate may not close completely and, if left unnoticed, could result in serious injury or death if an occupant were to fall out of the vehicle.
Always be sure that the area around the liftgate is clear before activating it.

Always confirm the safety of the area around the power liftgate before operating it electrically.

Not checking the area around the liftgate for people before operating it using the power liftgate switch or the button on the keyless entry system is dangerous. A person could become caught between the liftgate and an obstruction while it is opening electrically or between the liftgate and vehicle while it is closing electrically, resulting in an accident and serious injury.

Never allow children to operate the power liftgate system:

Allowing children to operate the power liftgate switch and the keyless entry system is dangerous. Children are not aware of the dangers of people getting fingers and hands caught in a moving liftgate. If someone's neck, head or hands get caught in a closing door, it could result in death or serious injury.

*Some models.

CAUTION

- *When closing the power liftgate, make sure there are no foreign objects around the striker. If foreign objects are obstructing the striker, the liftgate may not close properly.*

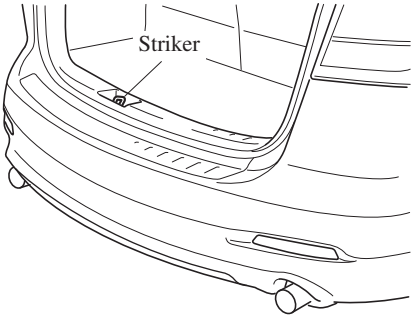

- *Do not install accessories to the power liftgate other than specified accessories. Otherwise, it cannot be opened/closed automatically and could result in a malfunction.*
- *Be careful when switching the power liftgate from electrical to manual operation. The power liftgate may open/close unexpectedly depending on its position which could result in injury.*

NOTE

- *Do not apply unnecessary force to the power liftgate when it is opening/closing electrically. Unnecessary force on the liftgate may cause it to reverse direction of movement automatically. Also, it could result in a malfunction.*
- *The power liftgate may not open/close electrically if the vehicle is parked on an incline, or there is strong wind, or the liftgate is laden with snow.*
- *The power liftgate will not operate unless it is unlocked. The power liftgate does not operate unless it is unlocked using the power door lock function.*
  Refer to Locking, Unlocking with Door-Lock Knob on page 3-29.
- *If a power liftgate system fuse has blown, the liftgate cannot be opened using the power liftgate switch or the outer handle (liftgate). Use the emergency lever to open the liftgate.*
- *Fully close the power liftgate before disconnecting the vehicle battery. If the battery is disconnected with the liftgate open, it cannot be opened or closed automatically after the battery is reconnected.*
- *To restore the power liftgate functions, perform the following:*
  1. *Park on level ground.*
  2. *Fully close the liftgate manually.*
  3. *Unlock the liftgate and all the doors.*
  4. *Press the power liftgate switch or the power liftgate button on the keyless entry system transmitter to fully open the liftgate.*
  5. *Press the power liftgate switch or the power liftgate button on the keyless entry system transmitter again to fully close the liftgate.*

Opening/Closing the power liftgate

If the vehicle has satisfied all the following operation conditions, the power liftgate can be opened using the power function.

Operation conditions

(1) The power liftgate is unlocked.
(2) The shift lever is in park (P) when the ignition is switched ON.

NOTE

- *If condition (2) is not satisfied while the power liftgate is opening electrically, the beep sound will be heard and the liftgate will move in the reverse direction automatically.*
- *If condition (2) is not satisfied while the power liftgate is closing electrically, the beep sound will be heard and the liftgate continues closing.*
- *When condition (2) is satisfied, you can resume power liftgate open/close operation with the switches.*
- *When the ignition is switched ON, the transmitter does not operate.*

Operation using the transmitter

Press the power liftgate button for one second or more with the power liftgate in the fully closed/open position. The hazard warning lights flash twice and the liftgate opens/closes after the beep sounds.
Refer to Keyless Entry System on page 3-13.

Operation from the driver's seat (To open/close)

Press the power liftgate switch for about one second or more while the liftgate is in the fully closed/open position. The hazard warning lights flash twice and the liftgate opens/closes fully after the beep sound is heard.

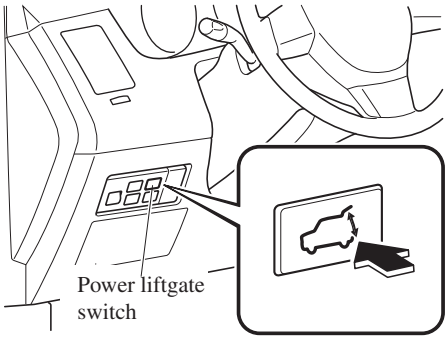

Operation from outside (To close only)

Press the power liftgate close switch while the liftgate is fully opened. The hazard warning lights flash twice and the liftgate closes automatically after the beep sound is heard.

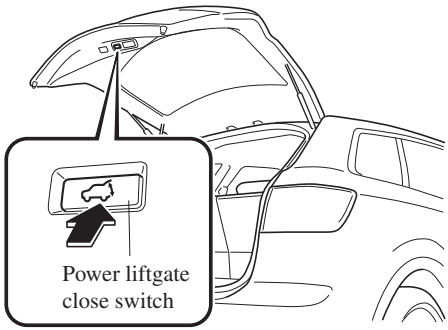

NOTE
If the power liftgate switch/power liftgate close switch/power liftgate button on the transmitter is pressed or the outside handle is operated while the liftgate is opening/closing electrically, the beep sound is heard and the liftgate moves in the reverse direction automatically. If this operation is repeated the system switches to manual operation.

Jam-safe equipment

While the power liftgate is opening/closing electrically and the system detects a person or an object in the liftgate's path, the liftgate will move in the reverse direction automatically.

⚠ WARNING

Always check the area around the power liftgate before opening/closing it:

Not checking for occupants and objects around the power liftgate before opening/closing it is dangerous. The jam-safe equipment is designed to prevent jamming in the event an obstruction is in the liftgate's path. The system may not detect certain objects obstructing the liftgate depending on the way they are positioned and their shape. However, if the jam-safe function detects an obstruction and moves the liftgate in the reverse direction, an occupant in the liftgate's path could be seriously injured.

⚠ CAUTION

Sensors are installed on both ends of the power liftgate. Be careful not to allow the sensors to be scratched or damaged by sharp objects, otherwise the liftgate may no longer open/close automatically. In addition, if the sensor is damaged while the liftgate is closing automatically, the system changes to manual operation.

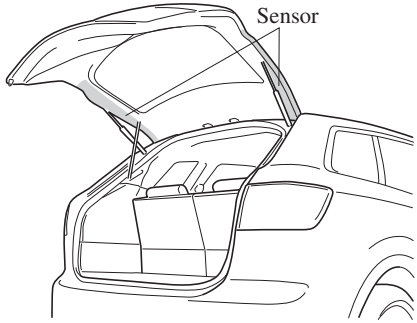

NOTE
The jam-safe equipment does not activate during easy closure operation when the power liftgate is between the near-shut position and fully closed position.

When the power liftgate is moving in the open/close direction and an obstruction is detected, the beep sound will be heard and the liftgate moves in the reverse direction.

NOTE
If the system repeatedly detects an object obstructing the power liftgate in the open/close direction several times, the beep sound will be heard and the system changes to manual operation.

Power liftgate drop prevention mechanism

The power liftgate drop prevention mechanism activates if the system detects weight such as that caused by a snow-laden liftgate when it is opened electrically. After the liftgate is fully opened, the beep sound will be heard and the liftgate closes automatically.

NOTE

- *If the power liftgate is snow-laden, remove the snow before operating the liftgate.*
- *Trying to force the power liftgate closed manually immediately after it has fully opened automatically may activate the liftgate drop prevention mechanism. However, this does not indicate a malfunction.*

Liftgate easy closure

The Easy Closure system automatically closes the liftgate completely from the near-shut position.
This system also operates when the liftgate is closed manually.

WARNING

When closing a liftgate, always keep hands and fingers away from the liftgate:

Placing hands or fingers around a liftgate is dangerous because the liftgate closes automatically from the near-shut position, which could cause hands and fingers to be pinched and injured.

NOTE

- *If the liftgate handle is pulled while the easy closure function is operating, the liftgate can be opened.*
- *If the liftgate is opened/closed repeatedly in a short period of time, the easy closure function may not operate. Wait for a while and then try again.*

Power Windows

The ignition must be switched ON for the power windows to operate.

⚠ WARNING

Make sure the opening is clear before closing a window:

Closing power windows are dangerous. A person's hands, head, or even neck could be caught by the window and result in serious injury or even death.
This warning applies especially to children.

Never allow children to play with power window switches:

Power window switches that are not locked with the power window lock switch would allow children to operate power windows unintentionally which could result in serious injury if a child's hands, head or neck becomes caught by the window.

▼Operating the Front Power Windows

NOTE

- *Each passenger power window can be operated with each door switch when the power window lock switch on the driver's door is in the unlocked position (page 3-44).*
- *Each passenger power window can also be operated using the master control switches on the driver's door.*

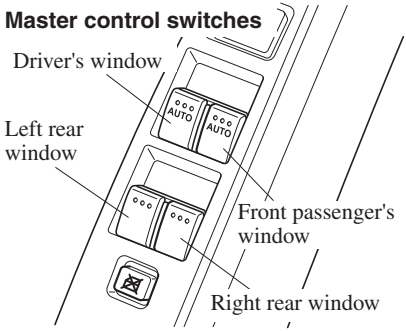

- *The following functions can be performed for the front power windows using the power window master control switches on the driver's door or front passenger's door switch.*
  - *Manual opening/closing*
  - *Auto-opening/closing*
  - *Two-step down function*

Normal opening/closing

To open a power window to the desired position, lightly hold down the switch.
To close the power window to the desired position, lightly pull up the switch.

Master control switches

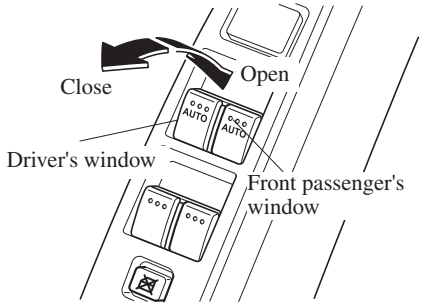

Front passenger switch

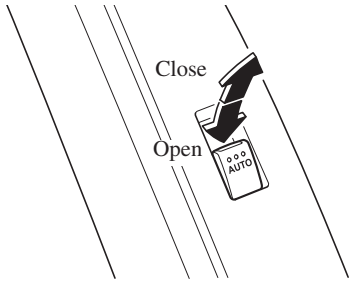

Auto-opening/closing

To fully open a power window automatically, press the switch completely down.
To fully close the power window automatically, pull the switch completely up.

To stop the power window partway, pull or press the switch in the opposite direction and then release it.

Power window system initialization procedure

If the battery was disconnected during vehicle maintenance, or for other reasons (such as a switch continues to be operated after the window is fully open/closed), the power windows will not fully open and close automatically. Resetting of the automatic function can be performed using the master control switches or the front passenger door switch.
The power window auto function reset procedure can be done on one or both door switches. The power window auto function will only resume on the side that has been reset.

1. Switch the ignition ON.
2. Make sure that the power window lock switch located on the driver's door is not depressed.
3. Press the switch and fully open the power window.
4. Pull up the switch to fully close the power window and continue holding the switch for about 2 seconds after the window fully closes.
5. Repeat Steps 3-4 for each front power window.
6. Make sure that the power windows operate correctly using the door switches.

Two-step down function

With the power window completely closed, press the switch lightly and it will open and stop about 3 cm (1 in) from the top.
If you continue to press and hold the switch, the window will resume opening all the way.

NOTE
Pressing the power window switch once when the window is fully closed will only open it about 3 cm (1 in) to allow convenient ventilation of the cabin.

Canceling the two-step down function

To cancel the two-step down function for the front power windows, carry out the following procedure using the master control switches.

1. Switch the ignition ON and complete the following procedure within 5 seconds:
   Press the power window switch 2 times firmly, then pull it 2 times firmly.

Master control switches

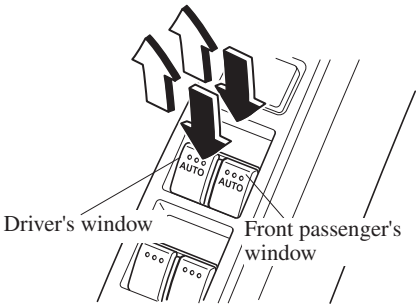

2. Switch the ignition off.
3. With the ignition off, and within 40 seconds, switch the ignition ON and complete the following procedure within 5 seconds:
   Press the power window switch 2 times firmly, then pull 2 times firmly.

NOTE
- *The two-step down function cannot be canceled if the procedure is not completed within the specified times, or the procedure is changed along the way. To redo the procedure, first switch the ignition off and proceed from the beginning.*
- *If you are unable to cancel the function despite carrying out the cancellation procedure, consult an Authorized Mazda Dealer.*

Restoring the two-step down function

With the two-step down function in the canceled state, repeat the previous procedure for canceling the function on each door switch and it will be restored.

NOTE
If you are unable to restore the function despite doing the restore procedure, consult an Authorized Mazda Dealer.

Jam-safe window

If a person's hands, head or an object blocks the window during the manual closing operation or the auto-closing operation, the window will stop and open halfway.

⚠ WARNING

Make sure nothing blocks the window just before it reaches the fully closed position or while fully holding up the power window switch:

Blocking the power window just before it reaches the fully closed position or while fully holding up the power window switch is dangerous. In this case, the jam-safe function cannot prevent the window from closing all the way. If fingers are caught, serious injuries could occur.

NOTE

- *Depending on driving conditions, a closing power window could stop and start opening when the window feels a shock that is similar to something blocking it.*
  In the event the jam-safe function activates and the power window cannot be closed automatically, pull and hold the switch fully and the window will close.
- *The jam-safe window function does not operate until the system is re-initialized.*

Engine-off power window operation

The power window can be operated for about 40 seconds after the ignition is switched from ON to ACC or OFF with all doors closed. If any door is opened, the power window will stop operating.

NOTE

- *For engine-off operation of the power window, the switch must be held up firmly throughout window closure because the auto-closing function will be inoperable.*
- *The two-step down function is inoperable during engine-off operation.*

▼Operating the Rear Power Windows

The power windows may be operated when the power window lock switch on the driver's door is in the unlocked position.

The rear power windows may be opened or closed using the master control switches on the driver's door.

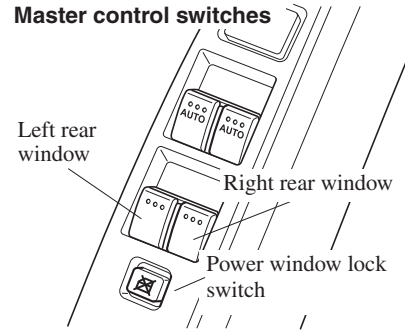

To open the power window to the desired position, hold down the switch.
To close the power window to the desired position, pull up the switch.

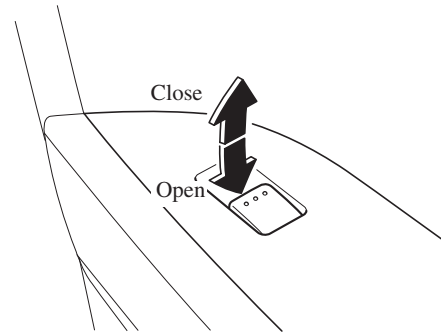

Engine-off power window operation

The power windows can be operated for about 40 seconds after the ignition is switched from ON to ACC or OFF with all doors closed. If any door is opened, the power windows will stop operating.

▼Power Window Lock Switch

This feature prevents all power windows from operating, except the driver's power window. Keep this switch in the locked position while children are in the vehicle.
Locked position (button depressed):
Only the driver's power window can be operated.
Unlocked position (button not depressed):
All power windows on each door can be operated.

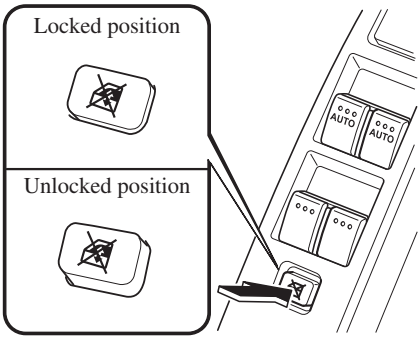

▼Opening/Closing the Power Windows and the Moonroof from Outside

The front power windows and the moonroof can be opened or closed from outside the vehicle after the doors and the liftgate are closed.
The front power windows may be operated remotely when the power window lock switch on the driver's door is in the lock or unlocked position.

⚠ WARNING

Make sure the opening is clear before closing a window and the moonroof:
Closing power windows and the moonroof are dangerous. A person's hands, head, or even neck could be caught by the window or the moonroof and result in serious injury or even death.
This warning applies especially to children.

NOTE

- *The power windows and the moonroof cannot be opened or closed from outside the vehicle under the following condition:*
  - *A door or the liftgate is opened.*
  - *The key is inserted into the ignition switch.*
  - *The ignition is in any position except OFF. (With advanced key)*
- *The power windows and the moonroof may not close completely. Make sure all the windows and the moonroof are closed.*

  If the power windows and the moonroof cannot be closed completely, operate each power window switch or the tilt/slide switch from inside the vehicle. After closing the windows and the moonroof from outside the vehicle, verify that they are completely closed.

Opening

Because nobody likes getting into a very hot car, Mazda has introduced a way to open the two front windows and the moonroof as you approach the vehicle to get the air moving before you get in.

WARNING

Use the remote auto-window and the auto-moonroof function only when you can see the vehicle and it is in a secure area:

Do not let children play with your keys. If they open the window and moonroof without your knowing, the open windows and moonroof are an even bigger invitation to a thief than leaving the doors unlocked.

The windows and moonroof can be opened for ventilating the cabin before getting in the vehicle.

With unlock button (Keyless entry system)

Press the unlock button on the transmitter once, then press it again immediately and hold.
After the doors and the liftgate are unlocked, the two front windows and the moonroof open while the unlock button is pressed.
To stop the windows and the moonroof while opening, release the button.
If the operation is performed from the beginning again, the windows and the moonroof open.

Advanced key

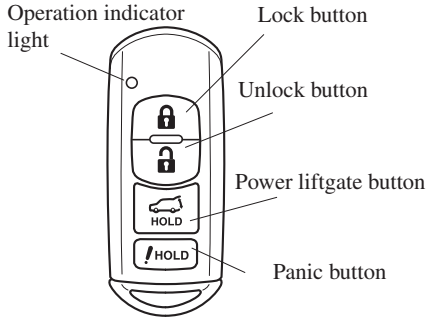

Retractable type key

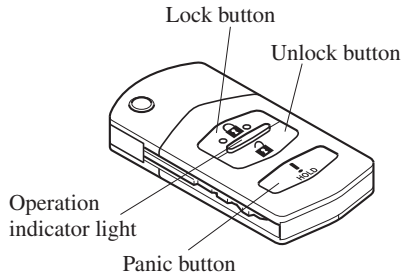

NOTE

- *The unlock button does not operate unless it is pressed twice sequentially.*
- *The lock button cannot be used to close the power windows and the moonroof.*

With key

1. Insert the key in the driver's door key cylinder.
2. Turn the key counterclockwise and hold until the windows and the moonroof are completely open. After the doors and the liftgate are unlocked, the windows and the moonroof fully open automatically.

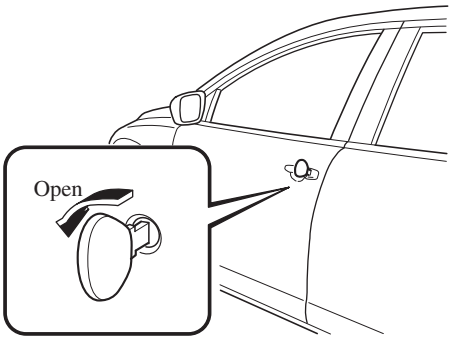

To stop this operation, turn the key to the center position, then turn it counterclockwise again.

NOTE
The window and the moonroof opening operation also can be stopped by turning the key clockwise. However, the doors and the liftgate will lock.

Closing

The windows and the moonroof can be closed in case they are left open after getting out of the vehicle.

NOTE
(With advanced key)
If the auto-lock function (page 3-8) has been activated, the doors and the liftgate automatically lock as you walk away from the vehicle, however, the power windows and the moonroof cannot be closed. When leaving the vehicle, close the windows and the moonroof using the power window switch or the tilt or slide switch inside the vehicle, the key, or a request switch on the front door handles.

With key

1. Insert the key in the driver's door key cylinder.
2. Turn the key clockwise and hold until the windows and the moonroof are completely closed. After the doors and the liftgate are locked, the windows and the moonroof close as long as the key is turned.

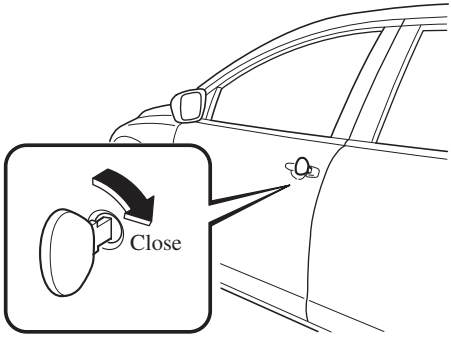

With request switch on the driver's door (Advanced key)

1. If the doors and the liftgate are locked, unlock them.
2. Press and hold the request switch on the driver's door. After the doors and the liftgate are locked, the windows and the moonroof close as long as the request switch is pressed.

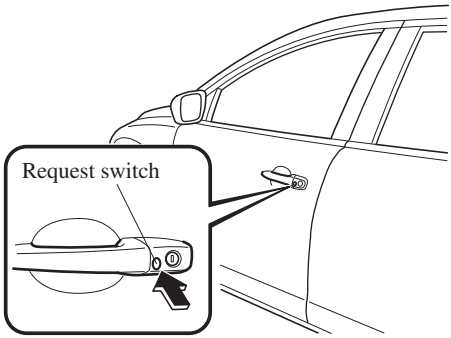

To stop the windows and the moonroof from closing, release the request switch. If the operation is performed from the beginning again, the windows and the moonroof close.

Fuel-Filler Lid and Cap

WARNING

When removing the fuel-filler cap, loosen the cap slightly and wait for any hissing to stop. Then remove it:

Fuel spray is dangerous. Fuel can burn skin and eyes and cause illness if ingested. Fuel spray is released when there is pressure in the fuel tank and the fuel-filler cap is removed too quickly.

Before refueling, stop the engine, and always keep sparks and flames away from the filler neck:

Fuel vapor is dangerous. It could be ignited by sparks or flames causing serious burns and injuries. Additionally, use of the incorrect fuel-filler cap or not using a fuel-filler cap may result in fuel leak, which could result in serious burns or death in an accident.

CAUTION

Always use only a genuine Mazda fuel-filler cap or an approved equivalent, available at an Authorized Mazda Dealer. The wrong cap can result in a serious malfunction of the fuel and emission control systems. It may also cause the check engine light in the instrument cluster to illuminate.

▼Fuel-Filler Lid

To open, pull the remote fuel-filler lid release.

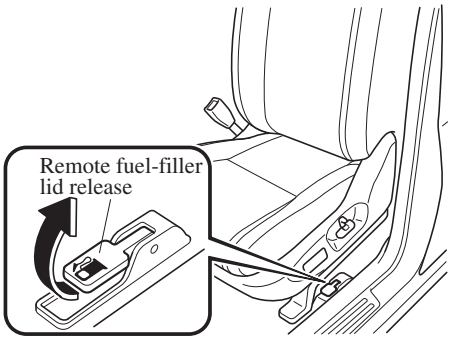

▼Fuel-Filler Cap

To remove the fuel-filler cap, turn it counterclockwise.
Attach the removed cap to the inner side of the fuel lid.

To close the fuel-filler cap, turn it clockwise until two or more clicks are heard.

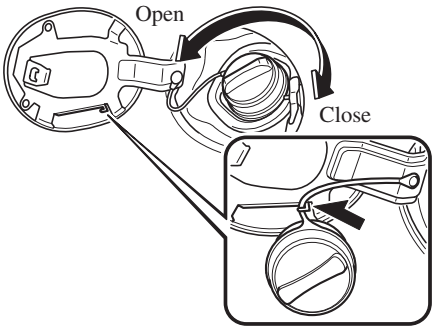

⚠ CAUTION

If the check fuel cap warning light illuminates, the fuel-filler cap may not be properly installed. If the warning light illuminates, park your vehicle safely off the right-of-way, remove the fuel-filler cap and reinstall it correctly. After the cap has been correctly installed, the fuel cap warning light may continue to illuminate until a number of driving cycles have been completed. A drive cycle consists of starting the engine (after four or more hours with the engine off) and driving the vehicle on city and highway roads.
Continuing to drive with the check fuel cap warning light illuminated could cause the check engine light to illuminate as well.

Hood

WARNING

Always check that the hood is closed and securely locked:

A hood that is not closed and securely locked is dangerous as it could fly open while the vehicle is moving and block the driver's vision which could result in a serious accident.

▼Opening the Hood

1. With the vehicle parked, pull the release handle to unlock the hood.

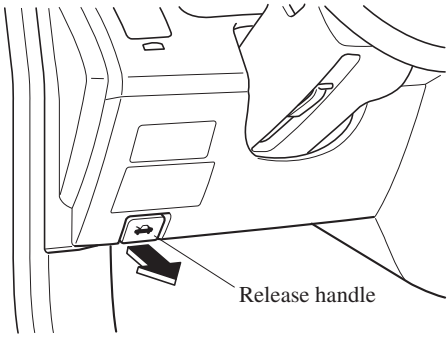

2. Insert your hand into the hood opening, slide the hood latch lever, and lift the hood.

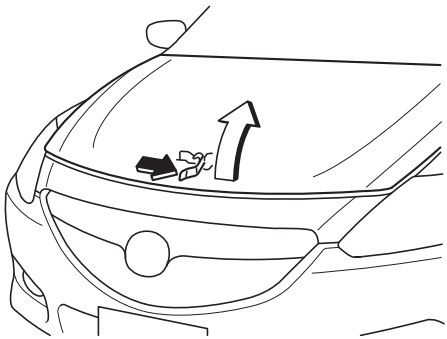

3. Grasp the support rod in the padded area and secure it in the support rod hole indicated by the arrow to hold the hood open.

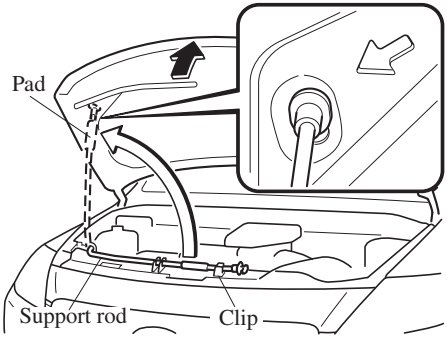

▼Closing the Hood

1. Check under the hood area to make certain all filler caps are in place and all loose items (e.g. tools, oil containers, etc.) have been removed.
2. Lift the hood, grasp the padded area on the support rod, and secure the support rod in the clip. Verify that the support rod is secured in the clip before closing the hood.

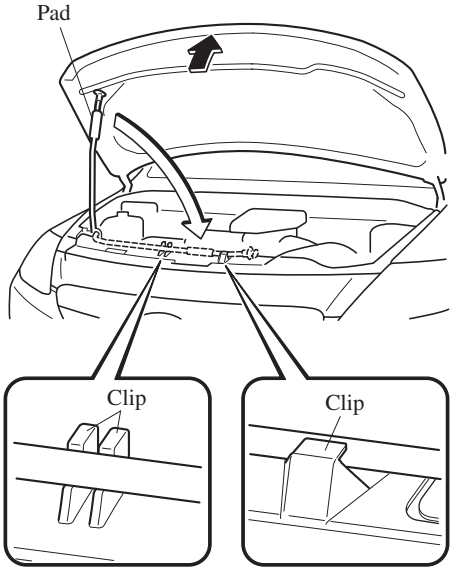

3. Lower the hood slowly from a height of about 20 cm (7.9 in) above its closed position and then let it drop.

⚠ CAUTION

When closing the hood, do not push it excessively such as by applying your weight. Otherwise, the hood could be deformed.

Moonroof*

The moonroof can be opened or closed electrically only when the ignition is switched ON.

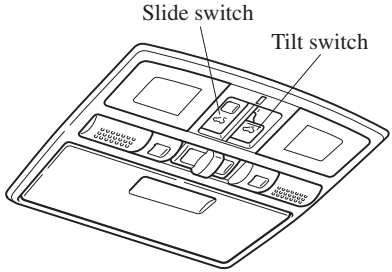

⚠ WARNING

Do not let passengers stand up or extend part of their body through the open moonroof while the vehicle is moving:

Extending the head, arms, or other parts of the body through the moonroof is dangerous. The head or arms could hit something while the vehicle is moving. This could cause serious injury or death.

Make sure the opening is clear before closing the moonroof:

A closing moonroof is dangerous. The hands, head, or even neck of a person, especially a child, could be caught in it as it closes, causing serious injury or even death.

*Some models.

NOTE
Before washing your Mazda, make sure the moonroof is completely closed so that water does not get inside the cabin area. After washing your Mazda or after it rains, wipe the water off the moonroof before operating it to avoid water penetration which could cause rust and water damage to your headliner.

▼Tilt Operation

The rear of the moonroof can be tilted open to provide more ventilation.

To fully tilt automatically, momentarily press the tilt switch.
To fully close automatically, momentarily pull the tilt switch or press the front of the slide switch.
To stop tilting partway, press any part of the tilt or slide switch.

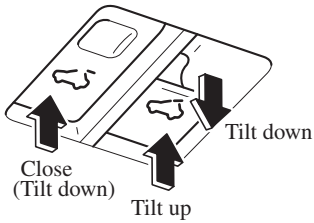

▼Slide Operation

To fully open automatically, momentarily press the rear of the slide switch.
To fully close automatically, momentarily press the front of the slide switch or pull the tilt switch.
To stop sliding partway, press any part of the tilt or slide switch.

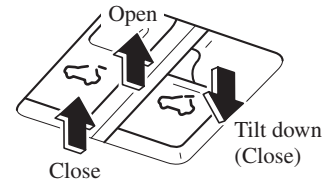

▼Power Moonroof Re-set Procedure

If the battery is disconnected, the moonroof will not operate. The moonroof will not operate correctly until it is re-set. Carry out the following procedure to re-set the moonroof and resume operation:

1. Switch the ignition ON.
2. Press the tilt switch, to partially tilt open the rear of the moonroof.
3. Repeat Step 2. The rear of the moonroof tilts open to the fully open position, then closes a little.

NOTE
If the re-set procedure is performed while the moonroof is in the slide position (partially open) it closes before the rear tilts opens.

▼Engine-off Moonroof Operation

The moonroof can be operated for about 40 seconds after the ignition is switched from ON to ACC or switched off with all doors closed. If any door is opened, the moonroof will be inoperable.

▼Opening/Closing the Moonroof from Outside

The moonroof can be opened or closed from outside the vehicle after the doors and the liftgate are closed.
Refer to Opening/Closing the Power Windows and the Moonroof from Outside on page 3-44.

▼Jam-safe Moonroof

If a person's hands, head or an object blocks the moonroof during closing operation, the moonroof will stop and open halfway.

⚠ WARNING

Make sure nothing blocks the moonroof just before it reaches the fully closed position:

Blocking the moonroof just before it reaches the closed position is dangerous.
In this case, the jam-safe function cannot prevent the moonroof from closing. If fingers are caught, serious injuries could occur.

NOTE

- *Depending on driving conditions, a closing moonroof could stop and start opening when the moonroof feels a shock that is similar to something blocking it.*
- *The moonroof's jam-safe function does not function while the moonroof is initializing.*

▼Sunshade

The sunshade can be opened and closed by hand.

The sunshade opens automatically when the moonroof is opened, but must be closed by hand.

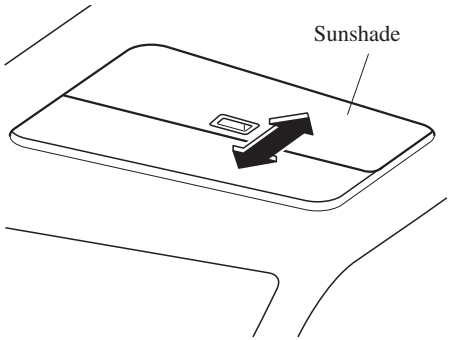

⚠ CAUTION

- *The sunshade does not tilt. To avoid damaging the sunshade, do not push up on it.*
- *Do not close the sunshade while the moonroof is opening. Trying to force the sunshade closed could damage it.*

Immobilizer System (With Advanced Key)

The immobilizer system allows the engine to start only with an advanced key the system recognizes.

If someone attempts to start the engine with an unrecognized advanced key, the engine will not start, thereby helping to prevent the theft of your vehicle.
If you have a problem with the immobilizer system or the advanced key (including auxiliary key), consult an Authorized Mazda Dealer.

CAUTION

- *Radio equipment like this is governed by laws in the United States.*
  Changes or modifications not expressly approved by the party responsible for compliance could void the user's authority to operate the equipment.
- *To avoid damage to the key, do not:*
  - *Drop the key.*
  - *Get the key wet.*
  - *Expose the key to any kind of magnetic field.*
  - *Expose the key to high temperatures on places such as the dashboard or hood, under direct sunlight.*

CAUTION

Do not allow the following when starting the engine with the auxiliary key due to an advanced key dead battery or other malfunction. Otherwise the signal from the auxiliary key will not be received correctly and the engine may not start.

- *A key ring rests on the auxiliary key grip.*

- *Metal parts of other keys or metal objects touch the auxiliary key grip.*

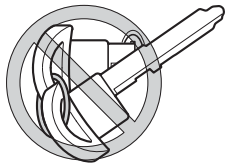

- *Spare auxiliary keys or keys for other vehicles equipped with an immobilizer system touch or come near the auxiliary key.*

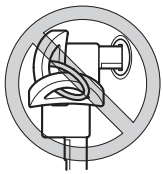

➢ *Devices for electronic purchases, or security passage which touch or come near the auxiliary key.*

NOTE

- *The advanced keys (including auxiliary key) carry a unique electronic code. For this reason, and to assure your safety, obtaining a replacement advanced key (including auxiliary key) requires some waiting time. They are only available through an Authorized Mazda Dealer.*
- *Always keep a spare advanced key in case one is lost. If an advanced key is lost, consult an Authorized Mazda Dealer as soon as possible.*
- *If you lose an advanced key (including auxiliary key), an Authorized Mazda Dealer will reset the electronic codes of your remaining advanced keys (including auxiliary keys) and immobilizer system. Bring all the remaining advanced keys (including auxiliary keys) to an Authorized Mazda Dealer to reset.*
  Starting the vehicle with a key that has not been reset is not possible.

Declaration of Conformity

Immobilizer system

(U.S.A)
FCC WARNING
Changes or modifications not expressly approved by the party responsible for compliance could void the user's authority to operate the equipment.
Note
*This device complies with Part 15 of the FCC Rules. Operation is subject to the following two conditions:
(1) this device may not cause harmful interference, and (2) this device must accept any interference received, including interference that may cause undesired operation.

(CANADA)
This device complies with RSS-210 of Industry CANADA. Operation is subject to the following two conditions: (1) this device may not cause interference, and (2) this device must accept any interference, including interference that may cause undesired operation of the device.

(MEXICO)
Este equipo opera a titulo secundario, consecuentemente, debe aceptar interferencias perjudiciales incluyendo equipos de la misma clase y puede no causar interferencias a sistemas operando a titulo primario

Sistema inmovilizador
Modelo : IMB111-02
Sistema inmovilizador con marcado de confirmación por radio

COFETEL RCPMAIM05-614

Sistema inmovilizador
Modelo : IMB111-03
Sistema inmovilizador con marcado de confirmación por radio

COFETEL RCPMAIM05-935

▼Operation

Arming

The system is armed when the ignition is switched from ON to ACC or OFF. The security indicator light in the instrument cluster flashes every 2 seconds until the system is disarmed.

Disarming

The system is disarmed when the ignition is switched ON with the registered advanced key.
The security indicator light illuminates for about 3 seconds and goes out.

If the engine does not start with the correct advanced key, and the security indicator light keeps illuminating or flashing, the system may have a malfunction. Consult an Authorized Mazda Dealer.

NOTE

- *The engine may not start and the security indicator light may illuminate or flash if the advanced key is placed in an area where it is difficult for the system to detect the signal, such as on the dashboard, or in the glove box. Move the advanced key to another place, switch the ignition off, and then restart the engine.*
- *Signals from a TV or radio station, or from a transceiver or a mobile telephone could interfere with your immobilizer system. If you are using the proper advanced key and the engine fails to start, check the security indicator light. If the indicator light is flashing, switch the ignition to ACC or switch the ignition off and wait for a while, then restart the engine. If it does not start after 3 or more tries, contact an Authorized Mazda Dealer.*
- *If the security indicator light flashes continuously while you are driving, do not shut off the engine. Go to an Authorized Mazda Dealer and have it checked. If the engine is shut off while the indicator light is flashing, you will not be able to restart it.*
- *Since the electronic codes are reset when repairing the immobilizer system, the advanced key (including auxiliary key) are needed. Bring all the advanced keys (including auxiliary keys) to an Authorized Mazda Dealer.*

▼Modification and Add-On Equipment

Mazda cannot guarantee the immobilizer system's operation if the system has been modified or if any add-on equipment has been installed.

⚠ CAUTION

To avoid damage to your vehicle, do not modify the system or install any add-on equipment to the immobilizer system or the vehicle.

Immobilizer System (Without Advanced Key)

The immobilizer system allows the engine to start only with a key the system recognizes.

If someone attempts to start the engine with an unrecognized key, the engine will not start, thereby helping to prevent the theft of your vehicle.
If you have a problem with the immobilizer system or the key, consult an Authorized Mazda Dealer.

⚠ CAUTION

- *Radio equipment like this is governed by laws in the United States.*
  Changes or modifications not expressly approved by the party responsible for compliance could void the user's authority to operate the equipment.
- *To avoid damage to the key, do not:*
  - *Drop the key.*
  - *Get the key wet.*
  - *Expose the key to any kind of magnetic field.*
  - *Expose the key to high temperatures on places such as the dashboard or hood, under direct sunlight.*

CAUTION

When starting the engine do not allow the following, as the engine may not start due to the electronic signal from the ignition key not being transmitted correctly.

- *A key ring rests on the key grip.*

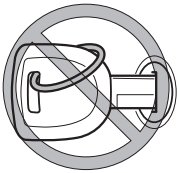

- *Metal parts of other keys or metal objects touch the key grip.*

- *Spare keys or keys for other vehicles equipped with an immobilizer system touch or come near the key grip.*

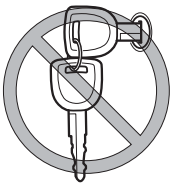

- *Devices for electronic purchases, or security passage which touch or come near the key.*

NOTE

- *The keys carry a unique electronic code. For this reason, and to assure your safety, obtaining a replacement key requires some waiting time. They are only available through an Authorized Mazda Dealer.*
- *Always keep a spare key, in case one is lost. If a key is lost, contact an Authorized Mazda Dealer as soon as possible.*
- *If you lose a key, an Authorized Mazda Dealer will reset the electronic codes of your remaining keys and immobilizer system. Bring all the remaining keys to an Authorized Mazda Dealer to reset. Starting the vehicle with a key that has not been reset is not possible.*

Declaration of Conformity

Immobilizer system

(U.S.A)
FCC WARNING
Changes or modifications not expressly approved by the party responsible for compliance could void the user's authority to operate the equipment.
Note
*This device complies with Part 15 of the FCC Rules. Operation is subject to the following two conditions:
(1) this device may not cause harmful interference, and (2) this device must accept any interference received, including interference that may cause undesired operation.

(CANADA)
This device complies with RSS-210 of Industry CANADA. Operation is subject to the following two conditions: (1) this device may not cause interference, and (2) this device must accept any interference, including interference that may cause undesired operation of the device.

(MEXICO)
Este equipo opera a titulo secundario, consecuentemente, debe aceptar interferencias perjudiciales incluyendo equipos de la misma clase y puede no causar interferencias a sistemas operando a titulo primario

Sistema inmovilizador
Modelo : IMB111-02
Sistema inmovilizador con marcado de confirmación por radio

COFETEL RCPMAIM05-614

Sistema inmovilizador
Modelo : IMB111-03
Sistema inmovilizador con marcado de confirmación por radio

COFETEL RCPMAIM05-935

▼Operation

Arming

The system is armed when the ignition is switched from ON to ACC or OFF.
The security indicator light in the instrument cluster flashes every two seconds until the system is disarmed.

Disarming

The system is disarmed when the ignition is switched ON with the correct ignition key.
The security indicator light illuminates for about three seconds and goes out.

If the engine does not start with the correct ignition key, and the security indicator light keeps illuminating or flashing, the system may have a malfunction. Consult an Authorized Mazda Dealer.

NOTE

- *If the security indicator light illuminates and stays on or flashes when the ignition is switched ON, the engine will not start.*
- *Signals from a TV or radio station, or from a transceiver or a mobile telephone, could interfere with your immobilizer system. If you are using the proper key and your engine fails to start, check the security indicator light. If it is flashing, remove the ignition key and wait 2 seconds or more, then reinsert it and try starting the engine again. If it does not start after 3 or more tries, contact an Authorized Mazda Dealer.*
- *If the security indicator light flashes continuously while you are driving, do not shut off the engine. Go to an Authorized Mazda Dealer and have it checked. If you shut off the engine while the light is flashing you will not be able to restart it.*
- *Since the electronic codes are reset when repairing the immobilizer system, the keys are needed. Bring all the existing keys to an Authorized Mazda Dealer.*

▼Modification and Add-On Equipment

Mazda cannot guarantee the immobilizer system's operation if the system has been modified or if any add-on equipment has been installed.

⚠ CAUTION

To avoid damage to your vehicle, do not modify the system or install any add-on equipment to the immobilizer system or the vehicle.

Theft-Deterrent System*

If the theft deterrent system detects an inappropriate entry into the vehicle, which could result in the vehicle or its contents being stolen, the alarm alerts the surrounding area of an abnormality by sounding the horn and flashing the hazard warning lights.
Refer to Operation on page 3-61.

NOTE

- *The theft-deterrent system operates with the advanced keyless function, keyless entry system or the auxiliary key.*
  The system operates only when the driver is in the vehicle or within operational range while the advanced key is being carried.
- *The system will not function unless it is properly armed. To properly secure the vehicle, always make sure all windows are completely closed and all doors and the liftgate are locked before leaving the vehicle. Remember to take your advanced key.*

▼Operation

What turns it on:

- Forcing open a door, the hood or the liftgate.
- Opening a door or the hood by operating an inside door-lock knob or the hood release handle.

What it does:

- The horn sounds intermittently and the hazard warning lights flash.
- The alarm continues for about 30 seconds, then stops.

If the system is triggered again, the lights and horn will activate until a door or the liftgate is unlocked with the key or with the transmitter.

NOTE

If the battery goes dead while the theft-deterrent system is armed, the horn will activate and the hazard warning lights will flash when the battery is charged or replaced.

▼How to Arm the System

1. Close the windows and the moonroof* securely.
2. Remove the key from the ignition switch.
   (With advanced key)
   Switch the ignition off with the start knob.
3. Make sure all the windows, the moonroof*, the hood are closed. Close and lock all doors and the liftgate from the outside using the key or press the lock button on your keyless entry system transmitter.
   The hazard warning lights will flash once to indicate that the system is armed.
   The following method will also arm the theft-deterrent system:
   (With advanced key)
   Press a request switch or the lock button on the transmitter.
   (Without advanced key)
   Close the hood and the liftgate. Press the area on the door-lock switch marked "🔒" once. Close all doors.

The theft deterrent system can also be armed by activating the auto re-lock function with all the doors, the liftgate and the hood closed.

4. After 20 seconds, the system is fully armed.

*Some models.

NOTE

- ***Auto re-lock function***
  After unlocking with the transmitter or the request switch, all doors and the liftgate will automatically lock and the hazard warning lights will flash if any of the following operations are not performed within about 30 seconds.
  - *A door or the liftgate is opened.*
  - *The auxiliary key is inserted into the ignition switch (with advanced key).*
  - *The key is inserted in the ignition switch.*
  - *The start knob is pushed (with advanced key).*
- *The system will disarm if one of the following operations takes place within 20 seconds after closing the hood and locking all the doors and the liftgate:*
  - *Pressing the unlock button on the transmitter.*
  - *Any door or the liftgate is opened.*
  - *Unlocking a door with the inside door-lock knob.*
  - *Unlocking a door with the door lock switch.*
  - *Unlocking the driver's door with the key.*
  - *The hood is opened.*
  - *The key is inserted in the ignition switch.*
  - *The auxiliary key is inserted into the ignition switch (With advanced key).*
  - *The start knob is pressed into the ignition switch or a request switch is pressed (With advanced key).*
  - *The ignition is switched ON.*

  To rearm the system, do the arming procedure again.
- *When the doors are locked by pressing the lock button on the transmitter or request switch on the front doors or using the key while the theft-deterrent system is armed, the hazard warning lights will flash once to indicate that the system is armed.*

▼To Turn off an Armed System

An armed system can be turned off by any one of the following methods:

- Unlock a door with the key.
- Press the unlock button on the keyless entry system transmitter.
- Insert the key into the ignition switch and switch the ignition ON.
- **(With advanced key)**
  - Press a request switch or the unlock button on the transmitter.
  - Switch the ignition ON with the start knob.

The hazard warning lights will flash twice to indicate that the system is turned off.

NOTE

When the doors are unlocked by pressing the unlock button on the transmitter or request switch on the front doors or using the key while the theft-deterrent system is turned off, the hazard warning lights will flash twice to indicate that the system is turned off.

▼To Stop an Alarm

A triggered alarm can be turned off by any one of the following methods:

- Unlock a door or the liftgate with the key.
- Press the unlock button on the keyless entry system transmitter.
- The engine is started with the ignition key.
- **(With advanced key)**
  - Press a request switch.
  - Press the unlock button on the transmitter.
  - The engine is started with the start knob.

NOTE
If you have any problem with the theft-deterrent system, consult an Authorized Mazda Dealer.

▼Theft-Deterrent Labels

A label indicating that your vehicle is equipped with a Theft-Deterrent System is in the glove compartment.

Mazda recommends that you affix it to the lower rear corner of a front door window.

Steering Wheel

WARNING

Never adjust the steering wheel while the vehicle is moving:

Adjusting the steering wheel while the vehicle is moving is dangerous. Moving it can very easily cause the driver to abruptly turn to the left or right. This can lead to loss of control or an accident.

▼Steering Wheel Adjustment

To change the angle or length of the steering wheel:

1. Stop the vehicle, pull down the lock release lever under the steering column.

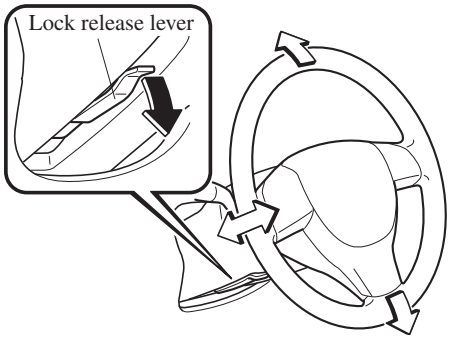

2. Tilt the steering wheel and/or adjust the steering column length to the desired positions, push the lever up to lock the column.
3. Push the wheel up and down to be certain it's locked before driving.

Mirrors

▼Outside Mirrors

Check the mirror angles before driving.

Mirror type

Flat type (driver's side)
Flat surface mirror.
Convex type (front passenger side)
The mirror has single curvature on its surface.

WARNING

Be sure to look over your shoulder before changing lanes:

Changing lanes without taking into account the actual distance of the vehicle in the convex mirror is dangerous. You could have a serious accident. What you see in the convex mirror is closer than it appears.

Power mirror

The ignition must be switched to ACC or ON.

To adjust:

1. Press the left or right side of the selector switch to choose the left or right side mirror.

2. Depress the mirror switch in the appropriate direction.

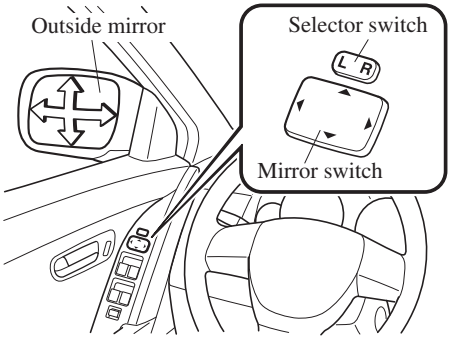

After adjusting the mirror, lock the control by placing the selector switch in the center position.

NOTE

(With seat position memory function)

The on-road outside mirror position can be programmed in conjunction with the seat position memory function.

Refer to Seat Position Memory on page 2-6.

Power mirrors with reverse tilt down function*

When the ignition is switched ON and the selector lever is shifted to the R position, the outside mirrors tilt downward to facilitate the view of the lower area on each side of the vehicle.

1. Switch the left/right power door mirror selector switch to the left or right side.
2. Shift the selector lever to the R position while depressing the brake pedal. The outside mirrors tilt downward automatically.

NOTE

If the left/right power outside mirror selector switch is in the center position, or the selector lever is shifted to a position other than the R position, the outside mirrors return to their on-road position automatically. The door mirrors return to their on-road position automatically even when the ignition is switched from ON to off.

Folding the mirror

Fold the outside mirror rearward until it is flush with the vehicle.

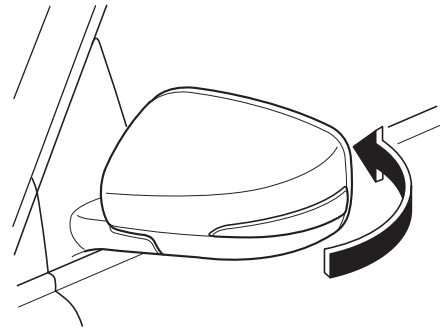

⚠ WARNING

Always return the outside mirrors to the driving position before you start driving:

Driving with the outside mirrors folded in is dangerous. Your rear view will be restricted, and you could have an accident.

*Some models.

▼Rearview Mirror

WARNING

Do not stack cargo or objects higher than the seatbacks:

Cargo stacked higher than the seatbacks is dangerous. It can block your view in the rearview mirror, which might cause you to hit another car when changing lanes.

Rearview mirror adjustment

Before driving, adjust the rearview mirror to center on the scene through the rear window.

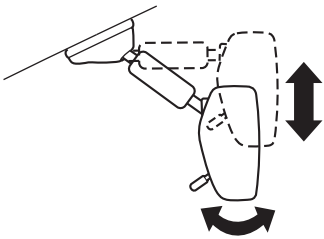

NOTE

For the manual day/night mirror, perform the adjustment with the day/night lever in the day position.

Reducing glare from headlights

Manual day/night mirror

Push the day/night lever forward for day driving. Pull it back to reduce glare of headlights from cars at the rear.

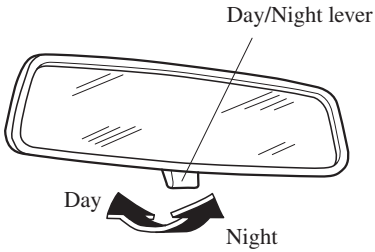

Auto-dimming mirror

The auto-dimming mirror automatically reduces glare of headlights from cars at the rear when the ignition is switched ON.

Press the OFF button (○) to cancel the automatic dimming function. The indicator light will turn off.
To reactivate the automatic dimming function, press the ON button (|). The indicator light will illuminate.

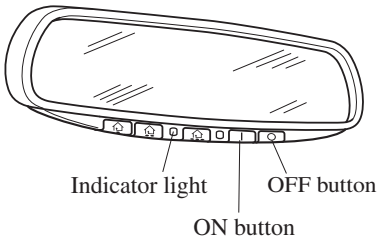

NOTE

- *Do not use glass cleaner or suspend objects on or around the light sensor. Otherwise, light sensor sensitivity will be affected and may not operate normally.*

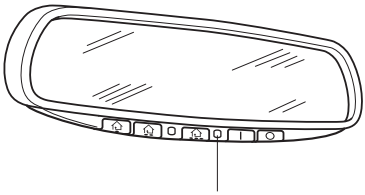

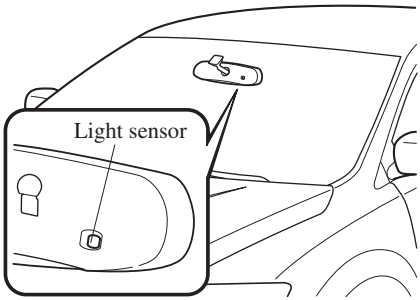

- *For information regarding the 3 buttons (, ,) on the auto-dimming mirror, refer to HomeLink Wireless Control System (page 5-81).*
- *The auto-dimmer function is canceled when the ignition is switched ON and the shift lever/selector lever is in reverse (R).*

4 Before Driving Your Mazda

Important information about driving your Mazda.

Fuel and Engine Exhaust Precautions 4-2
Fuel Requirements 4-2
Emission Control System 4-3
Engine Exhaust (Carbon Monoxide) 4-4

Before Starting the Engine 4-5
Before Getting In 4-5
After Getting In 4-5

Driving Tips 4-6
Break-In Period 4-6
Money-Saving Suggestions 4-6
Hazardous Driving 4-7
Floor Mat 4-9
Rocking the Vehicle 4-9
Winter Driving 4-10
Driving In Flooded Area 4-12
Overloading 4-12
Driving on Uneven Road 4-13

Towing 4-14
Trailer Towing (U.S.A. and Canada) 4-14

Fuel Requirements

Vehicles with catalytic converters or oxygen sensors must use ONLY UNLEADED FUEL, which will reduce exhaust emissions and keep spark plug fouling to a minimum.

Fuel with a lower rating could cause the emission control system to lose effectiveness. It could also cause engine knocking and serious engine damage.

Your Mazda will perform best with fuel listed in the table.

Fuel	Octane Rating* (Anti-knock index)
Regular unleaded fuel	87 [(R+M)/2 method] or above (91 RON or above)

* U.S. federal law requires that octane ratings be posted on gasoline station pumps.

Fuel with a rating lower than 87 octane (91 RON) could cause the emission control system to lose effectiveness. It could also cause engine knocking and serious engine damage.

CAUTION

- *USE ONLY UNLEADED FUEL.*
  Leaded fuel is harmful to the catalytic converter and oxygen sensors and will lead to deterioration of the emission control system and or failures.
- *Your vehicle can only use oxygenated fuels containing no more than 10 % ethanol by volume. Damage to your vehicle may occur when ethanol exceeds this recommendation, or if the gasoline contains any methanol. Stop using gasohol of any kind if your vehicle engine is performing poorly.*
- *Never add fuel system additives. Otherwise, the emission control system could be damaged. Consult an Authorized Mazda Dealer for details.*

Gasoline blended with oxygenates such as alcohol or ether compounds are generally referred to as oxygenated fuels. The common gasoline blend that can be used with your vehicle is ethanol blended at no more than 10%. Gasoline containing alcohol, such as ethanol or methanol, may be marketed under the name “Gasohol”.

Vehicle damage and drivability problems resulting from the use of the following may not be covered by the Mazda warranty.

- Gasohol containing more than 10% ethanol.
- Gasoline or gasohol containing methanol.
- Leaded fuel or leaded gasohol.

Emission Control System

Your vehicle is equipped with an emission control system (the catalytic converter is part of this system) that enables your vehicle to comply with existing exhaust emissions requirements.

WARNING

Never park over or near anything flammable:

Parking over or near anything flammable, such as dry grass, is dangerous. Even with the engine turned off, the exhaust system remains very hot after normal use and could ignite anything flammable. A resulting fire could cause serious injury or death.

CAUTION

Ignoring the following precautions could cause lead to accumulate on the catalyst inside the converter or cause the converter to get very hot. Either condition will damage the converter and cause poor performance.

- *USE ONLY UNLEADED FUEL.*
- *Do not drive your Mazda with any sign of engine malfunction.*
- *Do not coast with the ignition switched off.*
- *Do not descend steep grades in gear with the ignition switched off.*
- *Do not operate the engine at high idle for more than 5 minutes.*
- *Do not tamper with the emission control system. All inspections and adjustments must be made by a qualified technician.*
- *Do not push-start or pull-start your vehicle.*

NOTE

Under U.S. federal law, any modification to the original-equipment emission control system before the first sale and registration of a vehicle is subject to penalties. In some states, such modification made on a used vehicle is also subject to penalties.

Engine Exhaust (Carbon Monoxide)

WARNING

Do not drive your vehicle if you smell exhaust gas inside the vehicle:

Engine exhaust gas is dangerous. This gas contains carbon monoxide (CO), which is colorless, odorless, and poisonous. When inhaled, it can cause loss of consciousness and death. If you smell exhaust gas inside your vehicle, keep all windows fully open and contact an Authorized Mazda Dealer immediately.

Do not run the engine when inside an enclosed area:

Running the engine inside an enclosed area, such as a garage, is dangerous. Exhaust gas, which contains poisonous carbon monoxide, could easily enter the cabin. Loss of consciousness or even death could occur.

Open the windows or adjust the heating or cooling system to draw fresh air when idling the engine:

Exhaust gas is dangerous. When your vehicle is stopped with the windows closed and the engine running for a long time even in an open area, exhaust gas, which contains poisonous carbon monoxide, could enter the cabin. Loss of consciousness or even death could occur.

Clear snow from underneath and around your vehicle, particularly the tail pipe, before starting the engine:

Running the engine when a vehicle is stopped in deep snow is dangerous. The exhaust pipe could be blocked by the snow, allowing exhaust gas to enter the cabin. Because exhaust gas contains poisonous carbon monoxide, it could cause loss of consciousness or even death to occupants in the cabin.

Before Getting In

- Be sure the windows, outside mirrors, and outside lights are clean.
- Inspect inflation pressures and condition of tires.
- Look under the vehicle for any sign of fluid leaks.
- If you plan to back up, make sure nothing is in your way.

NOTE

Engine oil, engine coolant, brake fluid, washer fluid, and other fluid levels should be inspected. See Maintenance, Section 8.

After Getting In

- Are all doors closed and locked?
- Is the seat adjusted properly?
- Are the inside and outside mirrors adjusted?
- Is the steering wheel adjusted properly?
- Is everyone's seat belt fastened?
- Check all gauges.
- Check all warning lights when the ignition is switched ON.
- Release the parking brake and make sure the brake warning light goes off.

Always be thoroughly familiar with your Mazda.

Break-In Period

No special break-in is necessary, but a few precautions in the first 1,000 km (600 miles) may add to the performance, economy, and life of your Mazda.

- Do not race the engine.
- Do not maintain one constant speed, either slow or fast, for a long period of time.
- Do not drive constantly at full-throttle or high engine rpm for extended periods of time.
- Avoid unnecessary hard stops.
- Avoid full-throttle starts.
- Do not tow a trailer.

Money-Saving Suggestions

How you operate your Mazda determines how far it will travel on a tank of fuel. Use these suggestions to help save money on fuel and repairs.

- Avoid long warm-ups. Once the engine runs smoothly, begin driving.
- Avoid fast starts.
- Keep the engine tuned. Follow the maintenance schedule (page 8-4) and have an Authorized Mazda Dealer perform inspections and servicing.
- Use the air conditioner only when necessary.
- Slow down on rough roads.
- Keep the tires properly inflated.
- Do not carry unnecessary weight.
- Do not rest your foot on the brake pedal while driving.
- Keep the wheels in correct alignment.
- Keep windows closed at high speeds.
- Slow down when driving in crosswinds and headwinds.

⚠ WARNING

Never stop the engine when going down a hill:

Stopping the engine when going down a hill is dangerous. This causes the loss of power steering and power brake control, and may cause damage to the drivetrain. Any loss of steering or braking control could cause an accident.

Hazardous Driving

▼Driving on Slippery Surface

⚠ WARNING

Be extremely careful if it is necessary to downshift on slippery surfaces:

Downshifting into lower gear while driving on slippery surfaces is dangerous. The sudden change in tire speed could cause the tires to skid. This could lead to loss of vehicle control and an accident.

Do not rely on ABS or RSC as a substitute for safe driving:

The ABS and RSC cannot compensate for unsafe and reckless driving, excessive speed, tailgating (following another vehicle too closely), driving on ice and snow, and hydroplaning (reduced tire friction and road contact because of water on the road surface). You can still have an accident.

When driving on ice or in water, snow, mud, sand, or similar hazards:

- Be cautious and allow extra distance for braking.
- Avoid sudden braking and sudden maneuvering.
- Do not pump the brakes. Continue to press down on the brake pedal.
- If you get stuck, select a lower gear and accelerate slowly. Do not spin the front wheels.
- Do not perform abrupt maneuvers when the road surface changes (such as from a paved road to gravel) because the reaction of the vehicle against the driving operation changes.
- For more traction in starting on slippery surfaces such as ice or packed snow, use sand, rock salt, chains, carpeting, or other nonslip material under the front wheels.

NOTE

Use snow chains only on the front wheels.

▼Roll-over

⚠ WARNING

Avoid sharp turns, excessive speed and abrupt maneuvers when driving this vehicle:

Sharp turns, excessive speed and abrupt maneuvering of this vehicle is dangerous as it could result in the increased risk of loss of vehicle control, vehicle roll-over, personal injury or death.
This vehicle has a higher center of gravity. Vehicles with a higher center of gravity such as utility and AWD vehicles handle differently than vehicles with a lower center of gravity.
Utility and AWD vehicles are not designed for cornering at high speeds any more than low profile sports cars are designed to perform satisfactorily under off-road conditions.
In addition, utility vehicles have a significantly higher rollover rate than other types of vehicles.
RSC might help if you get into trouble, but then it might not be able to allow you to fully recover, always drive carefully with the vehicle's height in mind.

Drive carefully when the vehicle is loaded by lowering vehicle speed and applying the brakes earlier:

Abrupt maneuvering and sudden braking when driving a loaded vehicle is dangerous as the driving behavior of a vehicle with a high center of gravity is different when it is loaded compared to when it is not, and could result in the loss of vehicle control and an accident.

▼Emergency Maneuvering

⚠ WARNING

Do not perform abrupt maneuvers when driving the vehicle in an emergency situation:

Performing abrupt maneuvers even when driving in an emergency situation is dangerous as it could reduce vehicle stability and operability resulting in an accident. Operate the accelerator pedal, brake pedal, and the steering wheel smoothly.

Floor Mat

WARNING

Make sure the floor mats are hooked on the retention pins to prevent them from bunching up under the foot pedals:

Using a floor mat that is not secured is dangerous as it will interfere with the accelerator and brake pedal operation, which could result in an accident.

Do not install two floor mats, one on top of the other, on the driver's side:

Installing two floor mats, one on top of the other, on the driver's side is dangerous as the retention pins can only keep one floor mat from sliding forward.
In using a heavy duty floor mat for winter use always remove the original floor mat.
Loose floor mat(s) will interfere with the foot pedal and could result in an accident.

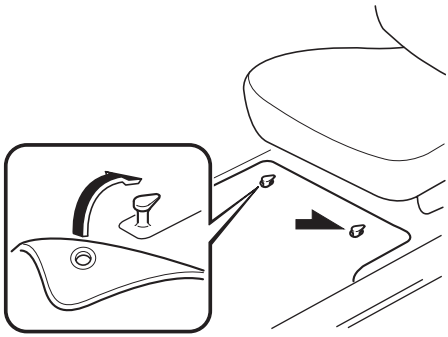

When setting a floor mat, position the floor mat so that its eyelets are inserted over the pointed end of the retention posts.

Rocking the Vehicle

WARNING

Do not spin the wheels at more than 56 km/h (35 mph), and do not allow anyone to stand behind a wheel when pushing the vehicle:

When the vehicle is stuck, spinning the wheels at high speed is dangerous. The spinning tire could overheat and explode. This could cause serious injuries.

CAUTION

Too much rocking may cause engine overheating, transaxle failure, and tire damage.

If you must rock the vehicle to free it from snow, sand or mud, depress the accelerator slightly and slowly move the shift lever from D to R.

Winter Driving

- Carry emergency gear, including tire chains, window scraper, a small shovel, jumper cables, and a small bag of sand or salt.

Ask an Authorized Mazda Dealer to perform the following precautions:

- Have the proper ratio of antifreeze in the radiator.
  Refer to Engine Coolant on page 8-23.
- Inspect the battery and its cables. Cold reduces battery capacity.
- Inspect the ignition system for damage and loose connections.
- Use washer fluid made with antifreeze—but do not use engine coolant antifreeze for washer fluid (page 8-26).
- Do not use the parking brake in freezing weather as it may freeze. Instead, shift to P and block the rear wheels.
- Snow left on the windshield is dangerous as it could obstruct vision. Remove snow before driving.
- Do not apply excessive force to a window scraper when removing ice or frozen snow on the mirror glass and windshield.
- Never use warm or hot water for removing snow or ice from windows and mirrors as it could result in the glass cracking.
- Braking performance can be adversely affected if snow or ice adheres to the brake equipment. If this situation occurs, drive the vehicle slowly, releasing the accelerator pedal and lightly applying the brakes several times until the brake performance returns to normal.

▼Snow Tires

Use snow tires on all four wheels

Do not go faster than 120 km/h (75 mph) while driving with snow tires. Inflate snow tires 30 kPa (0.3 kgf/cm^2, 4.3 psi) more than recommended on the tire pressure label (driver's door frame), but never more than the maximum cold-tire pressure shown on the tires.
Your vehicle is originally equipped with all season radials designed to be used all year around. In some extreme climates you may find it necessary to replace them with snow tires during the winter months to further improve traction on snow and ice covered roads.

⚠ WARNING

Use only the same size and type tires (snow, radial, or non-radial) on all four wheels:

Using tires different in size or type is dangerous. Your vehicle's handling could be greatly affected and result in an accident.

⚠ CAUTION

Check local regulations before using studded tires.

NOTE

If your vehicle is equipped with the tire pressure monitoring system, the system may not function correctly when using tires with steel wire reinforcement in the sidewalls (page 5-32).

▼Tire Chains

Check local regulations before using tire chains.

⚠ CAUTION

- *Chains may affect handling.*
- *Do not go faster than 50 km/h (30 mph) or the chain manufacturer's recommended limit, whichever is lower.*
- *Drive carefully and avoid bumps, holes, and sharp turns.*
- *Avoid locked-wheel braking.*
- *Do not use chains on a temporary spare tire; it may result in damage to the vehicle and to the tire.*
- *Do not use chains on roads that are free of snow or ice. The tires and chains could be damaged.*
- *Chains may scratch or chip aluminum wheels.*

NOTE

- *Use of tire chains on a vehicle equipped with P245/50R20 specification tires could cause interference with the vehicle body and scratching. If tire chains are to be used, replace both front and rear tires with P 245/60R18 tires. Please consult an Authorized Mazda Dealer.*
- *If your vehicle is equipped with the tire pressure monitoring system, the system may not function correctly when using tire chains.*

Install the chains on the front tires only. Do not use chains on the rear tires. Please consult an Authorized Mazda Dealer.

Installing the chains

1. Secure the chains on the front tires as tightly as possible. Always follow the chain manufacturer's instructions.
2. Retighten the chains after driving 1/2—1 km (1/4—1/2 mile).

Driving In Flooded Area

WARNING

Dry wet brakes by driving very slowly and applying the brakes lightly until brake performance returns to normal:

Driving with wet brakes is dangerous. Increased stopping distance or the vehicle pulling to one side when braking could result in a serious accident. Light braking will indicate whether the brakes have been affected.

CAUTION

Do not drive the vehicle on flooded roads as it could cause short circuiting of electrical/electronic parts, or engine damage or stalling from water absorption. If the vehicle has been immersed in water, consult an Authorized Mazda Dealer.

Overloading

WARNING

Be careful not to overload your vehicle:

The gross axle weight rating (GAWR) and the gross vehicle weight rating (GVWR) of your vehicle are on the Motor Vehicle Safety Standard Label on the driver's door frame. Exceeding these ratings can cause an accident or vehicle damage. You can estimate the weight of your load by weighing the items (or people) before putting them in the vehicle.

Driving on Uneven Road

Your vehicle's suspension and underbody can be damaged if driven on rough/uneven roads or over speed bumps at excessive speeds. Use care and reduce speed when traveling on rough/uneven roads or over speed bumps.

Use care not to damage the vehicle's underbody, bumpers or muffler(s) when driving under the following conditions:

- Ascending or descending a slope with a sharp transition angle
- Ascending or descending a driveway or trailer ramp with a sharp transition angle

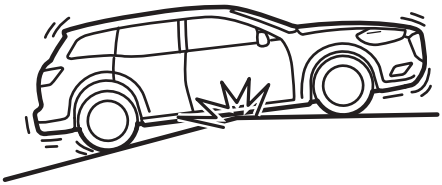

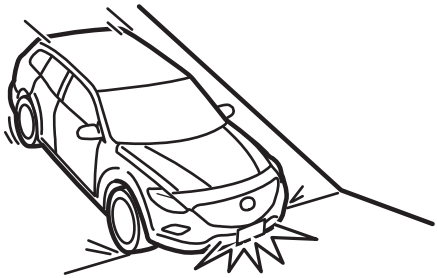

Your vehicle is equipped with low profile tires allowing class-leading performance and handling. As a result, the sidewall of the tires are very thin and the tires and wheels can be damaged if driven through potholes or on rough/uneven roads at excessive speeds. Use care and reduce speed when traveling on rough/uneven roads or through potholes.

Trailer Towing (U.S.A. and Canada)

Your Mazda was designed and built primarily to carry passengers and cargo.
If you tow a trailer, follow these instructions because driver and passenger safety depends on proper equipment and safe driving habits. Towing a trailer will affect handling, braking, durability, performance, and economy.
Never overload vehicle or trailer. Consult an Authorized Mazda Dealer if you need further details.

⚠ CAUTION

Do not tow a trailer during the first 1,000 km (600 miles) of your new Mazda. If you do, you may damage the engine, transaxle, differential, wheel bearings, and other power train components.

▼Weight Limits

TTW and GCWR

The total trailer weight (TTW), gross combination weight rating (GCWR), gross axle weight rating (GAWR), trailer load, and trailer tongue load must be within the prescribed limits.

- **The total trailer weight (TTW) is the sum of the weights of the trailer load (trailer weight plus cargo), trailer hitch, vehicle passengers, and vehicle load. Never allow the total trailer weight (TTW) to exceed specifications in the Trailer Towing-Load Table.**
- **The maximum GCWR is the combination weight of the trailer and load plus the towing vehicle (including trailer hitch, vehicle passengers, and load). It must not exceed specifications in the load table.**

GAWR and GVWR

Do not exceed front and rear GAWR (gross axle weight rating) and GVWR (gross vehicle weight rating). If you do, vehicle handling, braking, and performance will be affected. These values are also on the Motor Vehicle Safety Certification Label posted on the driver's door frame.

High-altitude operation

In a high-altitude operating environment, a gasoline engine loses power at a rate of 3 % to 4 % per 304 m (1,000 ft) of elevation. In these conditions, a reduction in gross vehicle weight and gross combination weight is recommended.

TRAILER TOWING-LOAD TABLE

Because vehicle weights vary, adjustments must be made to meet the requirements in this table.

Item			Model	
			Without Towing Package	With Towing Package
MAX. FRONTAL AREA			2.97 m^2 (32 ft^2)	4.65 m^2 (50 ft^2)
MAX. TTW	Add trailer's weight, load and hitch; vehicle passengers and vehicle load*1		907 kg (2,000 lb)	1,588 kg (3,500 lb)
MAX. GCWR			3,101 kg (6,836 lb)*2	3,782 kg (8,337 lb)*2
			3,196 kg (7,045 lb)*3	3,877 kg (8,547 lb)*3
MAX. GAWR		Front	1,276 kg (2,813 lb)*2	
			1,307 kg (2,881 lb)*3	
		Rear	1,400 kg (3,086 lb)*2	
			1,458 kg (3,214 lb)*3	
MAX. GVWR			2,645 kg (5,831 lb)*2	
			2,720 kg (5,997 lb)*3	
TRAILER-TONGUE LOAD	Tongue load		Tongue load/Trailer load × 100 = 10 % to 15 %	
	Trailer load			
DISTRIBUTION OF TRAILER LOAD		Front	60 %	
		Rear	40 %	

*1 i.e. baggage, food, camp gear
*2 2WD
*3 AWD

GCWR: Gross Combination Weight Rating (sum of TTW, vehicle weights and 2 passengers)
GAWR: Gross Axle Weight Rating

GVWR: Gross Vehicle Weight Rating

⚠ WARNING

Always keep tow loads within specified limits as indicated in the Trailer Towing-Load Table:

Attempting to tow loads greater than those specified is dangerous as it may cause serious handling and performance problems that could result in personal injury or vehicle damage, or both.

Load your trailer with the weight about 60 % toward the front and 40 % toward the rear:

Loading the trailer with more weight in the rear than in the front is dangerous. Doing so could cause you to lose control. The trailer tongue load must be 10 %—15 % of the total trailer load (sum of the weights of the trailer and cargo).

Always have the total trailer weight and tongue load determined prior to departure:

Attempting to tow loads without determining the total trailer weight and tongue load is dangerous. Trailer sway from crosswinds, rough roads or other causes could result in loss of control and a serious accident.

⚠ CAUTION

The total trailer weight and tongue load can be determined by weighing the trailer on platform scales at a highway weight station or a trucking company.

▼Trailer Hitch

Use only a hitch ball recommended by the trailer manufacturer that conforms to the gross trailer weight requirement.
When not towing a trailer, remove the trailer hitch (if detachable) to reduce the possibility of damage as a result of the vehicle being rear-ended.

⚠ WARNING

Always make sure the trailer hitch is securely attached before departure:

An unsecured trailer hitch is dangerous as it causes greater trailer sway from crosswinds, rough roads or other causes, resulting in loss of control and a serious accident.

Examine all trailer-hitch mounting bolts regularly and tighten any that are loose. If the hitch is removed, seal any open mounting holes to prevent exhaust, dust, water, dirt and other foreign elements from filtering in, possibly endangering personal safety and damaging your vehicle.

Do not install a hitch that stiffens the bumper as it will reduce the bumper's performance.

Make sure there are no exhaust gas leaks into the passenger compartment if any mounting bolts are connected to the body:

Modifying your vehicle exhaust system is dangerous. Exhaust gas entering the vehicle could cause loss of consciousness or even death.

When mounting the trailer hitch, make no modifications to the vehicle exhaust system.

⚠ CAUTION

- *Make all hitch adjustments with actual loads. Do not load and unload vehicle while adjusting hitch. This action will change the vehicle height.*
- *Do not use an axle-mounted hitch. This may damage the axle and related parts.*

▼Tires

When towing a trailer, make sure all tires are inflated to the recommended cold-tire pressure, as indicated on the tire pressure chart on the driver's door frame. Trailer tire size, load rating, and inflation pressures should conform to tire manufacturer specifications.

⚠ WARNING

Never use the temporary spare tire when towing:

Using the temporary spare tire on your vehicle when towing a trailer is dangerous as it could result in tire failure, loss of control, and injury to vehicle occupants.

▼Safety Chains

Safety chains must be used as a precautionary measure should the trailer become unintentionally unhitched. They should cross under the trailer tongue and attach to the hitch. Leave enough slack to allow full turns. Consult literature published by your trailer or hitch manufacturer for more details.

⚠ WARNING

Make sure the safety chain is securely attached to both the trailer and the vehicle prior to departure:

Towing a trailer without using a safety chain securely attached to both the trailer and the vehicle is dangerous. If damage occurs to the coupling unit or hitch ball, the trailer could wander into another lane and cause a collision.

▼Trailer Lights

Trailer lights must comply with all federal, state, and local regulations. Equip your trailer as required before towing it day or night.

⚠ CAUTION

Do not connect a trailer lighting system directly to the lighting system of your Mazda. This may damage your vehicle's electrical system and lighting systems. Have a recreational vehicle dealer or trailer rental agency connect the system, and inspect the brake lights and turn signals yourself before each trip.

▼Trailer Brakes

If the total trailer weight exceeds 450 kg (1,000 lb), trailer brakes are required. If your trailer has brakes, make sure they comply with all federal, state, and local regulations.

⚠ WARNING

Do not connect a hydraulic trailer-brake system to your vehicle's brake system:

Connecting a hydraulic trailer-brake system directly to the vehicle brake system is dangerous and will result in inadequate braking and possible injury.

▼Trailer Towing Tips

- Verify that your Mazda maintains a near-normal attitude when a loaded or unloaded trailer is connected. Do not drive if it has an abnormal front-up or front-down position. Inspect for incorrect tongue load, worn suspension parts, and trailer overloading.
- Make sure the trailer is properly loaded and the cargo is secure to prevent it from shifting.
- Make sure the mirrors conform to all government regulations. If they do not, install required rear view mirrors appropriate for towing purposes.

The three main causes of vehicle-trailer accidents are driver error, excessive speed, and improper trailer loading.

Before driving

- Have your cooling and braking system checked by an Authorized Mazda Dealer.
- Before starting out, inspect the operation of all vehicle and trailer lights and all vehicle-to-trailer connections. Stop and re-inspect all lights and connections after driving a short distance.

Driving

- Your Mazda will handle differently with a trailer in tow, so practice turning, backing, and stopping in a traffic-free area.
- Take time to get accustomed to the extra weight and length.
- Allow more room between your vehicle and the one in front because braking distance increases with a trailer. For each 16 km/h (10 mph) of speed, allow at least one vehicle and trailer length between your Mazda and the vehicle ahead.
- Avoid jerky starts or sudden acceleration.
- Avoid sudden braking. It may cause loss of control and result in jackknifing, especially so on wet or slippery roads.
- Shift the shift lever to the D position when towing a trailer in hilly terrain or when heavily loaded.

The D position will allow operating the vehicle without frequent shifting.

Lane changes and turning

Avoid quick lane changes, sudden turns, and tight turns. Slow down before turning to avoid the need of sudden braking.
A turning trailer will make a tighter arc than the tow vehicle. Compensate with turns that are larger than normal.

Passing

Plan well ahead to pass other vehicles, and provide plenty of room before changing lanes.
Crosswinds from passing vehicles, especially larger ones, and the effects of rough roads will affect handling.
If swaying occurs, firmly grip the steering wheel and reduce speed immediately, but gradually.
Steer straight ahead. If no extreme correction of steering or braking is made, the combination of less speed and firm steering will result in stability.

Backing up

Backing a vehicle with a trailer requires practice and patience. Back slowly, and have a helper outside at the rear of the trailer to reduce the risk of an accident.
To turn the trailer, place your hand at the bottom of the steering wheel and turn it in the direction you want the trailer to go. Make only slight movements to prevent sharp or prolonged turning.

Ascending a hill

Shift into a lower gear to reduce the possibility of overloading or overheating the engine, or both.

Descending a hill

Shift into a lower gear and use engine compression as a braking effect.

WARNING

Always use lower gears to reduce speed:

Holding the brake pedal down too long or too frequently is dangerous as it could cause the brakes to overheat and lose power, resulting in loss of control and a serious accident. Use lower gears to help reduce speed. Pull off the road and allow brakes to cool down whenever braking performance feels reduced.

Overheated engine

The extra weight of the trailer may strain the engine on hot days and on long or steep upgrades.
If the temperature gauge indicates overheating, turn off the air conditioner, drive safely to the side of the road, park off the right-of-way and wait for engine to cool. Refer to Overheating (page 7-16).

Parking

Always make sure the tires of the trailer and the tow vehicle are blocked while parked. Apply the parking brake firmly and put the transaxle in P.

Avoid parking on an incline, but if you must, follow these instructions:

1. Depress and hold down the brake pedal.
2. Have a helper put wheel blocks against the downhill side of all vehicle and trailer tires.
3. Then release the brake pedal slowly until the blocks bear the load.
   - If the grade is downhill, turn the steering wheel so that the front of the front tires face the curb.
   - If it is uphill, face the rear of the front tires against the curb.
4. Firmly apply the parking brake.
5. Shift the transaxle into P, and stop the engine.

To restart after parking on an incline:

1. With the transaxle in P, start the engine. (Be sure to depress and hold the brake pedal.)
2. Shift into gear.

3. Release the parking brake (also the foot brake) and pull away from the wheel blocks. Stop; apply the parking brake and shift into P.
4. Have a helper retrieve the wheel blocks.

Fuel consumption

Trailer towing causes higher fuel consumption.

Maintenance

If you tow a trailer frequently, have your vehicle serviced as shown in Scheduled Maintenance (page 8-4).

5 Driving Your Mazda

Explanation of instruments and controls.

Starting and Driving 5-2
Ignition Switch 5-2
Starting the Engine 5-4
Turning the Engine Off 5-5
Brake System 5-5
Automatic Transaxle Controls 5-11
Power Steering 5-17
All-Wheel Drive (AWD) Operation* 5-17
Cruise Control 5-20
Traction Control System (TCS) 5-23
Dynamic Stability Control (DSC)/Roll Stability Control (RSC) 5-26
Tire Pressure Monitoring System* 5-28
Blind Spot Monitoring (BSM) System* 5-34
Parking Sensor System 5-40

Instrument Cluster and Indicators 5-45
Meters and Gauges 5-45

Warning/Indicator Lights and Beep Sounds 5-49
Warning/Indicator Lights 5-49
Beep Sounds 5-63

Switches and Controls 5-65
Lighting Control 5-65
Turn and Lane-Change Signals 5-71
Fog Lights* 5-72
Windshield Wipers and Washer 5-73
Rear Window Wiper and Washer 5-77
Rear Window Defroster 5-78
Horn 5-79
Hazard Warning Flasher 5-80
HomeLink Wireless Control System* 5-81

*Some models.

Ignition Switch

Auxiliary key (with advanced key)

NOTE
When starting the engine using the advanced key, refer to Starting the Engine (page 3-10).

When starting the engine with the auxiliary key, perform the following procedure.

1. Remove the auxiliary key from the advanced key (page 3-17).
2. Make sure the start knob is in the OFF position.
3. Remove the start knob by pulling it outward while pressing the buttons on both the left and right sides.

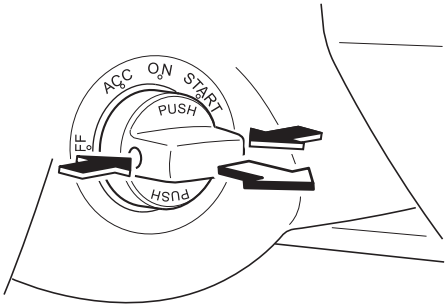

4. Insert the auxiliary key in the ignition switch.

▼Ignition Switch Positions

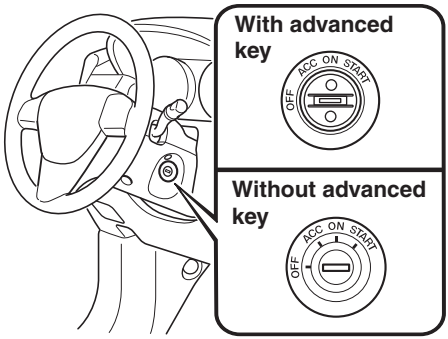

OFF

The power supply to electrical devices is turned off. Only in this position can the key be removed.

⚠ WARNING

Do not stop the engine while the vehicle is moving:

Stopping the engine while the vehicle is moving for any reason other than in an emergency is dangerous. Stopping the engine while the vehicle is moving will result in reduced braking ability due to the loss of power braking, which could cause an accident and serious injury.

Before leaving the driver's seat, always switch the ignition to OFF, set the parking brake and make sure the shift lever is in P:

It is important to switch the ignition to OFF even if you are not removing the key from the ignition or leaving the vehicle. Leaving the key in other positions will disable some of the vehicle security systems and run the battery down.
Leaving the driver's seat without switching the ignition to OFF, setting the parking brake and shifting the shift lever to P is dangerous. Unexpected vehicle movement could occur. This could cause an accident.

ACC (Accessory)

In this position, some electrical accessories will operate.

ON

This is the normal running position after the engine is started. Some indicator lights/warning lights should be inspected before the engine is started (page 5-49).

NOTE

When the ignition is switched ON, the sound of the fuel pump motor operating near the fuel tank can be heard. This does not indicate an abnormality.

NOTE

Vibration of the brake pedal may be felt when the ignition is switched ON, however, this is a normal operation of the DSC/RSC and does not indicate an abnormality.

START

The engine is started in this position. It will crank until you release the key. It then returns to the ON position.

▼Ignition Key Reminder

If the ignition is switched off or the ignition is switched to ACC with the key inserted, a continuous beep sound will be heard when the driver's door is opened.

Starting the Engine

NOTE
Engine-starting is controlled by the spark ignition system.
This system meets all Canadian Interference-Causing Equipment Standard requirements regulating the impulse electrical field strength of radio noise.

1. Occupants should fasten their seat belts.
2. Make sure the parking brake is on.
3. Depress the brake pedal.
4. Put the vehicle in park (P). If you must restart the engine while the vehicle is moving, shift into neutral (N).

NOTE
The starter will not operate if the shift lever is ***not*** *in P or N.*

5. Switch the ignition to START and hold (up to 10 seconds at a time) until the engine starts.

⚠ CAUTION

Do not try the starter for more than 10 seconds at a time. If the engine stalls or fails to start, wait 10 seconds before trying again. Otherwise, you may damage the starter and drain the battery.

6. After starting the engine, let it idle for about 10 seconds.

NOTE
- *In extremely cold weather or after the vehicle has not been driven in several days, let the engine warm up without operating the accelerator.*
- *Whether the engine is cold or warm, it should be started without use of the accelerator.*

Turning the Engine Off

⚠ WARNING

Do not stop the engine while the vehicle is moving:

Stopping the engine while the vehicle is moving for any reason other than in an emergency is dangerous. Stopping the engine while the vehicle is moving will result in reduced braking ability due to the loss of power braking, which could cause an accident and serious injury.

1. Stop the vehicle completely.
2. Shift the shift lever to the P position.
3. Switch the ignition from ON to OFF.

⚠ CAUTION

When leaving the vehicle, make sure the ignition is switched off.

Brake System

▼Foot Brake

Your Mazda has power-assisted brakes that adjust automatically through normal use.

Should power-assist fail, you can stop by applying greater force than normal to the brake pedal. But the distance required to stop will be greater than usual.

WARNING

Do not coast with the engine stalled or turned off, find a safe place to stop:

Coasting with the engine stalled or turned off is dangerous. Braking will require more effort, and the brake's power-assist could be depleted if you pump the brake. This will cause longer stopping distances or even an accident.

Shift to a lower gear when going down steep hills:

Driving with your foot continuously on the brake pedal or steadily applying the brakes for long distances is dangerous. This causes overheated brakes, resulting in longer stopping distances or even total brake failure. This could cause loss of vehicle control and a serious accident. Avoid continuous application of the brakes.

Dry off brakes that have become wet by driving slowly, releasing the accelerator pedal and lightly applying the brakes several times until the brake performance returns to normal:

Driving with wet brakes is dangerous. Increased stopping distance or the vehicle pulling to one side when braking could result in a serious accident. Light braking will indicate whether the brakes have been affected.

CAUTION

- *Do not drive with your foot held on the brake pedal. Doing so could result in the following:*
  - *The brake parts will wear out more quickly.*
  - *The brakes can overheat and adversely affect brake performance.*
- *Always depress the brake pedal with the right foot. Applying the brakes with the unaccustomed left foot could slow your reaction time to an emergency situation resulting in insufficient braking operation.*

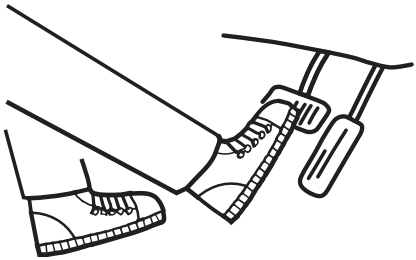

- *Wear shoes appropriate for driving in order to avoid your shoe contacting the brake pedal when depressing the accelerator pedal.*

▼Parking Brake

WARNING

Before leaving the driver's seat, always switch the ignition to OFF, set the parking brake and make sure the shift lever is in P:

It is important to switch the ignition to OFF even if you are not removing the key from the ignition or leaving the vehicle. Leaving the key in other positions will disable some of the vehicle security systems and run the battery down.
Leaving the driver's seat without switching the ignition to OFF, setting the parking brake and shifting the shift lever to P is dangerous. Unexpected vehicle movement could occur. This could cause an accident.

CAUTION

Driving with the parking brake on will cause excessive wear of the brake linings or pads.

NOTE

For parking in snow, refer to Winter Driving (page 4-10) regarding parking brake use.

Setting the parking brake

Depress the brake pedal, then depress the parking brake pedal fully.

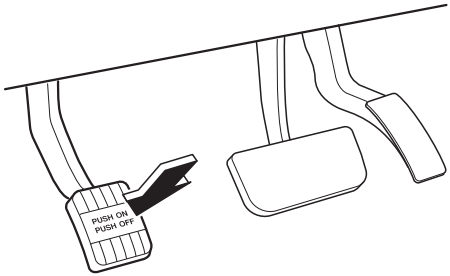

Releasing the parking brake

Depress the brake pedal, then depress the parking brake pedal until it releases. Gradually let up on the parking brake pedal.

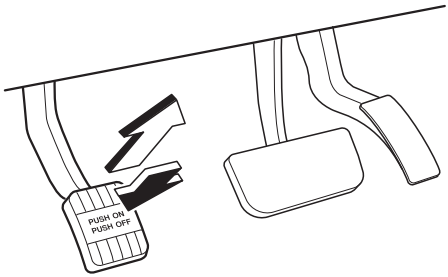

NOTE

Release the parking brake pedal once before trying to reapply it.

▼Brake System Warning Light

This warning has the following functions:

Parking brake warning

The light illuminates when the parking brake is applied with the ignition switched to START or ON. It turns off when the parking brake is fully released.

Low brake fluid level warning

If the light stays on after the parking brake is fully released, you may have a brake problem.

Drive to the side of the road and park off the right-of-way.

You may notice that the pedal is harder to depress or that it may go closer to the floor. In either case, it will take longer to stop the vehicle.

1. With the engine stopped, open the hood and check the brake fluid level immediately, and then add fluid if required (page 8-25).
2. After adding fluid, check the light again.

If the warning light remains on, or if the brakes do not operate properly, do not drive the vehicle. Have it towed to an Authorized Mazda Dealer.

Even if the light turns off, have your brake system inspected as soon as possible by an Authorized Mazda Dealer.

NOTE

Having to add brake fluid is sometimes an indicator of leakage. Consult an Authorized Mazda Dealer as soon as possible even if the brake light is no longer illuminated.

⚠ WARNING

Do not drive with the brake system warning light illuminated. Contact an Authorized Mazda Dealer to have the brakes inspected as soon as possible:

Driving with the brake system warning light illuminated is dangerous. It indicates that your brakes may not work at all or that they could completely fail at any time. If this light remains illuminated, after checking that the parking brake is fully released, have the brakes inspected immediately.

▼Parking Brake Reminder

If the parking brake has not been completely released and the vehicle is driven at about 5 km/h (3 mph) or faster, a continuous beep sound will be heard to notify the driver that the parking brake has not been released.

▼Anti-Lock Brake System (ABS)

The ABS control unit continuously monitors the speed of each wheel. If one wheel is about to lock up, the ABS responds by automatically releasing and reapplying that wheel's brake.

The driver will feel a slight vibration in the brake pedal and may hear a chattering noise from the brake system. This is normal ABS system operation. Continue to depress the brake pedal without pumping the brakes.

⚠ WARNING

Do not rely on ABS or RSC as a substitute for safe driving:

The ABS and RSC cannot compensate for unsafe and reckless driving, excessive speed, tailgating (following another vehicle too closely), driving on ice and snow, and hydroplaning (reduced tire friction and road contact because of water on the road surface). You can still have an accident.

NOTE

- *Braking distances may be longer on loose surfaces (snow or gravel, for example) which usually have a hard foundation. A vehicle with a normal braking system may require less distance to stop under these conditions because the tires will build up a wedge of surface layer when the wheels skid.*
- *The sound of the ABS operating may be heard when starting the engine or immediately after starting the vehicle, however, it does not indicate a malfunction.*

▼ABS Warning Light

The warning light stays on for a few seconds when the ignition is switched ON.

If the ABS warning light stays on while you're driving, the ABS control unit has detected a system malfunction. If this occurs, your brakes will function normally as if the vehicle had no ABS.
Should this happen, consult an Authorized Mazda Dealer as soon as possible.

NOTE

- *When the engine is jump-started to charge the battery, uneven rpm occurs and the ABS warning light may illuminate. If this occurs, it is the result of the weak battery and does not indicate an ABS malfunction.*
  Recharge the battery.
- *The brake assist system does not operate while the ABS warning light is illuminated.*

▼Electronic Brake Force Distribution System Warning

If the electronic brake force distribution control unit determines that some components are operating incorrectly, the control unit may illuminate the brake system warning light and the ABS warning light on simultaneously. The problem is likely to be the electronic brake force distribution system.

⚠ WARNING

Do not drive with both the ABS warning light and brake warning light illuminated. Have the vehicle towed to an Authorized Mazda Dealer to have the brakes inspected as soon as possible:

Driving when the brake system warning light and ABS warning light are illuminated simultaneously is dangerous.
When both lights are illuminated, the rear wheels could lock more quickly in an emergency stop than under normal circumstances.

▼Brake Assist

During emergency braking situations when it is necessary to depress the brake pedal with greater force, the brake assist system provides braking assistance, thus enhancing braking performance.

When the brake pedal is depressed hard or depressed more quickly, the brakes apply more firmly.

NOTE

- *When the brake pedal is depressed hard or depressed more quickly, the pedal will feel softer but the brakes will apply more firmly. This is a normal effect of the brake assist operation and does not indicate a malfunction.*
- *When the brake pedal is depressed hard or depressed more quickly, a motor/pump operation noise may be heard. This is a normal effect of the brake assist and does not indicate a malfunction.*
- *The brake assist equipment does not supersede the functionality of the vehicle's main braking system.*

▼Brake Pad Wear Indicator

When the disc brake pads become worn, the built-in wear indicators contact the disc plates. This causes a loud screeching noise to warn that the pads should be replaced.

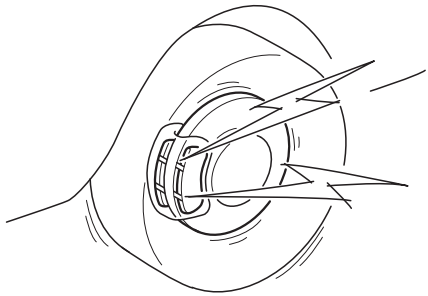

When you hear this noise, consult an Authorized Mazda Dealer as soon as possible.

⚠ WARNING

Do not drive with worn disc pads:

Driving with worn disc pads is dangerous. The brakes could fail and cause a serious accident. As soon as you hear a screeching noise consult an Authorized Mazda Dealer.

Automatic Transaxle Controls

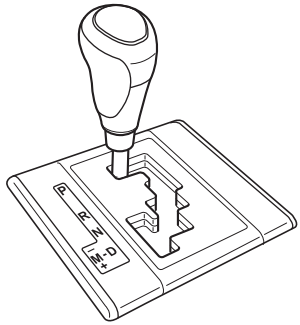

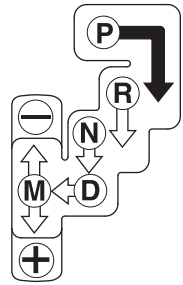

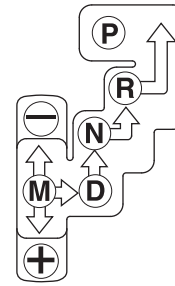

Various Lockouts:

➡ Indicates that you must depress the brake pedal to shift (The ignition must be switched to ACC or ON).

⇨ Indicates the shift lever can be shifted freely into any position.

NOTE

The Sport AT has an option that is not included in the traditional automatic transaxle giving the driver the option of selecting each gear instead of leaving it to the transaxle to shift gears. Even if you intend to use the automatic transaxle functions as a traditional automatic, you should also be aware that you can inadvertently shift into manual shift mode and an inappropriate gear may be retained as the vehicle speed increases. If you notice the engine speed going higher or hear the engine racing, confirm you have not accidentally slipped into manual shift mode (page 5-13).

▼Transaxle Ranges

The shift lever must be in P or N to operate the starter.

P (Park)

P locks the transaxle and prevents the front wheels from rotating.

⚠ WARNING

Always set the shift lever to P and set the parking brake:

Only setting the shift lever to the P position without using the parking brake to hold the vehicle is dangerous. If P fails to hold, the vehicle could move and cause an accident.

⚠ CAUTION

- *Shifting into P, N or R while the vehicle is moving can damage your transaxle.*
- *Shifting into a driving gear or reverse when the engine is running faster than idle can damage the transaxle.*

R (Reverse)

In position R, the vehicle moves only backward. You must be at a complete stop before shifting to or from R, except under rare circumstances as explained in Rocking the Vehicle (page 4-9).

N (Neutral)

In N, the wheels and transaxle are not locked. The vehicle will roll freely even on the slightest incline unless the parking brake or brakes are on.

⚠ WARNING

If the engine is running faster than idle, do not shift from N or P into a driving gear:

It's dangerous to shift from N or P into a driving gear when the engine is running faster than idle. If this is done, the vehicle could move suddenly, causing an accident or serious injury.

Do not shift into N when driving the vehicle:

Shifting into N while driving is dangerous. Engine braking cannot be applied when decelerating which could lead to an accident or serious injury.

⚠ CAUTION

Do not shift into N when driving the vehicle. Doing so can cause transaxle damage.

NOTE

Apply the parking brake or depress the brake pedal before moving the shift lever from N to prevent the vehicle from moving unexpectedly.

D (Drive)

D is the normal driving position. From a stop, the transaxle will automatically shift through a 6-gear sequence.

M (Manual)

M is the manual shift mode position. Gears can be shifted up or down by operating the shift lever.
Refer to Manual Shift Mode (page 5-13).

▼Active Adaptive Shift (AAS)

Active Adaptive Shift (AAS) automatically controls the transaxle shift points to best suit the road conditions and driver input. This improves driving comfort.
If the driver accelerates rapidly, or accelerates and decelerates rapidly by operating the accelerator and brake pedal for a certain period of time while the shift lever is in the D position, AAS mode could activate.
When cornering the vehicle, AAS mode will hold the transaxle in the gear the vehicle was in before entering the curve, allowing the vehicle to be accelerated from the same gear after exiting the curve. AAS mode will maintain the transaxle in the optimum gear and the driver may sense that the transaxle is not shifting, however this does not indicate an abnormality.

▼Shift-Lock System

The shift-lock system prevents shifting out of P unless the brake pedal is depressed.

To shift from P:

1. Depress and hold the brake pedal.
2. Start the engine.
3. Move the shift lever.

NOTE

- *When the ignition is switched off, the shift lever cannot be shifted from P.*
- *To be sure the vehicle is in park,* ***the ignition key cannot be removed unless the shift lever is in P.***
- ***(With Advanced Key)***
  The ignition cannot be switched from ACC to OFF when the shift lever is not in P.

▼Manual Shift Mode

This mode gives you the feel of driving a manual transaxle vehicle by operating the shift lever and allows you to control engine rpm and torque to the drive wheels much like a manual transaxle when more control is desired.

To change to manual shift mode, shift the lever from D to M.

NOTE

Changing to manual shift mode while driving will not damage the transaxle.

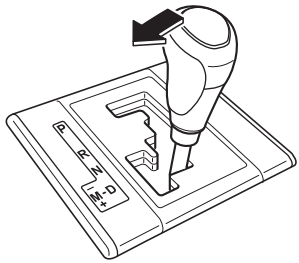

To return to automatic shift mode, shift the lever from M to D.

NOTE

- *If you change to manual shift mode when the vehicle is stopped, the gear will shift to M1.*
- *If you change to manual shift mode without depressing the accelerator pedal when driving in D range, 5th gear, the gear will shift to M4.*
- *If you change to manual shift mode without depressing the accelerator pedal when driving in D range, 6th gear, the gear will shift to M5.*

Indicators

Manual shift mode indicator

In manual shift mode, the “M” of the shift position indicator in the instrument panel illuminates.

Gear position indicator

The numeral for the selected gear illuminates.

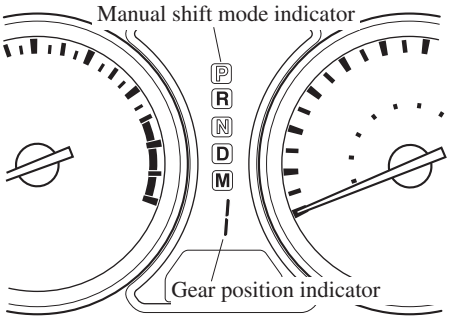

NOTE

If the gears cannot be shifted down when driving at higher speeds, the gear position indicator will flash twice to signal that the gears cannot be shifted down (to protect the transaxle).

Shifting

Manually Shifting up

(M1 → M2 → M3 → M4 → M5 → M6)

To shift up to a higher gear, tap the shift lever back (**+**) once.

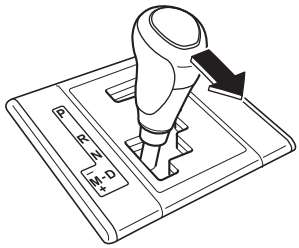

NOTE

- *When driving slowly, the gears may not shift up.*
- *In manual shift mode, gears do not shift up automatically. Do not run the engine with the tachometer needle in the RED ZONE. If the tachometer needle enters the RED ZONE, you may feel engine-braking because the fuel delivery will be stopped to protect the engine. However, this does not indicate an abnormality.*
- *When depressing the accelerator fully, the transaxle will shift to a lower gear, depending on vehicle speed.*

Manually Shifting down

(M6 → M5 → M4 → M3 → M2 → M1)

To shift down to a lower gear, tap the shift lever forward (−) once.

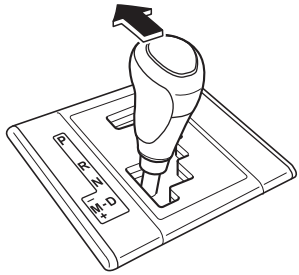

⚠ WARNING

Do not use engine braking on slippery road surfaces or at high speeds:

Shifting down while driving on wet, snowy, or frozen roads, or while driving at high speeds causes sudden engine braking, which is dangerous. The sudden change in tire speed could cause the tires to skid. This could lead to loss of vehicle control and an accident.

NOTE

- *When driving at high speeds, the gear may not shift down.*
- *During deceleration, the gear may automatically shift down depending on vehicle speed.*
- *When depressing the accelerator fully, the transaxle will shift to a lower gear, depending on vehicle speed.*

Second gear fixed mode

When the shift lever is tapped back (+) while the vehicle is stopped or driven at about 15 km/h (9.3 mph) or less, the transaxle is set in the second gear fixed mode. The gear is fixed in second while in this mode for easier starting and driving on slippery roads. If the shift lever is tapped back (+) or forward (−) while in the second gear fixed mode, the mode will be canceled.

Shifting specification

Shifting up

If the vehicle speed is lower than the speed specified for each gear, the gear cannot be shifted up to a higher gear.

Gear	Vehicle speed
M1 → M2	You can shift up to M2 whether the vehicle is stopped or moving.
M2 → M3	15 km/h (10 mph)
M3 → M4	29 km/h (19 mph)
M4 → M5	40 km/h (25 mph)
M5 → M6	50 km/h (32 mph)

Shifting down

If the vehicle speed is higher than the speed specified for each gear, the gear cannot be shifted to a lower gear so as to protect the transaxle.

Gear	Vehicle speed
M6 → M5	230 km/h (142 mph)
M5 → M4	201 km/h (124 mph)
M4 → M3	150 km/h (93 mph)
M3 → M2	96 km/h (59 mph)
M2 → M1	49 km/h (30 mph)

NOTE

Regarding the vehicle speed at the highest gear indicated above, achieving this speed may not actually be possible depending on various driving conditions such as the wind, upslope, and road surface.

During deceleration, the gears shift down automatically when speed is reduced to the following:

Gear	Vehicle speed
M6 → M5	47 km/h (29 mph)
M5 → M4	37 km/h (22 mph)
M4 → M3	26 km/h (16 mph)
M3 or M2 → M1	7 km/h (4 mph)

NOTE
The gear does not shift down to M1 automatically while in the second gear fixed mode.

If the vehicle is kicked down at the following speeds or lower, the gears shift down automatically:

Gear	Vehicle speed
M6 → M5	230 km/h (142 mph)
M5 → M4	90 km/h (55 mph)
M4 → M3	65 km/h (40 mph)
M3 → M2	40 km/h (24 mph)

Recommendations for shifting

Upshifting

For normal acceleration and cruising, we recommend these shift points.

Gear	Vehicle speed
M1 to M2	24 km/h (15 mph)
M2 to M3	40 km/h (25 mph)
M3 to M4	65 km/h (40 mph)
M4 to M5	73 km/h (45 mph)
M5 to M6	80 km/h (50 mph)

Downshifting

When you must slow down in heavy traffic or on a steep **upgrade**, downshift before the engine starts to overwork. This gives better acceleration when you need more speed.

On a steep **downgrade**, downshifting helps maintain safe speed and prolongs brake life.

▼Driving Tips

⚠ WARNING

Do not allow the vehicle to move in reverse on an up-slope while the selector lever is in a forward gear position, or move forward on a down-slope while the selector lever is in the reverse position.

Otherwise, the engine will stop, causing the loss of the power brake and power steering functions, and make it difficult to control the vehicle which could result in an accident.

Passing

For extra power when passing another vehicle or climbing steep grades, depress the accelerator fully. The transaxle will shift to a lower gear, depending on vehicle speed.

Climbing steep grades from a stop

To climb a steep grade from a stopped position:

1. Depress the brake pedal.
2. Shift to D or M1, depending on the load weight and grade steepness.
3. Release the brake pedal while gradually accelerating.

Descending steep grades

When descending a steep grade, shift to lower gears, depending on load weight and grade steepness. Descend slowly, using the brakes only occasionally to prevent them from overheating.

Power Steering

Power steering is only operable when the engine is running. If the engine is off or if the power steering system is inoperable, you can still steer, but it requires more physical effort.

If the steering feels stiffer than usual during normal driving, consult an Authorized Mazda Dealer.

⚠ CAUTION

Never hold the steering wheel to the extreme left or right for more than 5 seconds with the engine running. This could damage the power steering system.

All-Wheel Drive (AWD) Operation *

AWD provides excellent driveability on snow-covered and ice-packed roads, sand and mud, as well as on steep slopes and other slippery surfaces.

▼AWD Driving

WARNING

Avoid sharp turns, excessive speed and abrupt maneuvers when driving this vehicle:

Sharp turns, excessive speed and abrupt maneuvering of this vehicle is dangerous as it could result in the increased risk of loss of vehicle control, vehicle roll-over, personal injury or death.
This vehicle has a higher center of gravity. Vehicles with a higher center of gravity such as utility and AWD vehicles handle differently than vehicles with a lower center of gravity.
Utility and AWD vehicles are not designed for cornering at high speeds any more than low profile sports cars are designed to perform satisfactorily under off-road conditions. In addition, utility vehicles have a significantly higher rollover rate than other types of vehicles.
RSC might help if you get into trouble, but then it might not be able to allow you to fully recover, always drive carefully with the vehicle's height in mind.

Drive carefully when the vehicle is loaded by lowering vehicle speed and applying the brakes earlier:

Abrupt maneuvering and sudden braking when driving a loaded vehicle is dangerous as the driving behavior of a vehicle with a high center of gravity is different when it is loaded compared to when it is not, and could result in the loss of vehicle control and an accident.

▼AWD Warning Light

4WD

This warning light stays on for a few seconds when the ignition is switched ON.
Thereafter, the warning light will illuminate or flash under the following conditions:

- Illuminates when there is an abnormality with the AWD system.
- Flashes when the differential oil temperature is abnormally high.
- Flashes when there are continually large differences between front and rear wheel rotation, such as when trying to pull away from an icy surface, or when trying to extricate the vehicle from mud, sand or similar conditions.

If the AWD warning light illuminates:

If the AWD warning light illuminates, contact an Authorized Mazda Dealer.

If the AWD warning light flashes:

Park the vehicle in a safe place. After a few moments, if the warning light stops flashing, you can resume driving. If the light does not stop flashing, contact an Authorized Mazda Dealer.

⚠ WARNING

Never spin a wheel that is off the ground:

Spinning a wheel that is off the ground as a result of the vehicle being stuck or in a ditch is dangerous. The drive assembly could be seriously damaged which could lead to an accident or could even lead to overheating, oil leakage, and a fire.

▼Tires and Tire Chains

The condition of the tires plays a large role in the performance of the vehicle. Moreover, to prevent adverse effects to the drive assembly, please note the following:

Tires

- When replacing tires, always replace all front and rear tires at the same time.
- All tires must be of the same size, manufacture, brand and tread pattern. Pay particular attention when equipping snow or other types of winter tires.
- Do not mix tread-worn tires with normal tires.
- Inspect tire inflation pressures at the specified periods and adjust to the specified pressures.

NOTE

Check the tire inflation pressure label attached to driver's door frame for the correct tire inflation pressure.

- Make sure to equip the vehicle with genuine wheels of the specified size, on all wheels. With AWD, the system is calibrated for all four wheels being of the same dimensions.

Tire chains

- Install tire chains to the front tires.
- Do not use tire chains on the rear wheels.
- Do not drive the vehicle faster than 30 km/h (19 mph) with the tire chains installed.
- Do not drive the vehicle with tire chains on road conditions other than snow or ice.

▼Towing

If the vehicle requires towing, have it towed with all four wheels completely off the ground(page 7-21).

Cruise Control

With cruise control, you can set and automatically maintain any speed of more than about 30 km/h (19 mph).

⚠ WARNING

Do not use the cruise control under the following conditions:

Using the cruise control under the following conditions is dangerous and could result in loss of vehicle control.

- *Hilly terrain*
- *Steep inclines*
- *Heavy or unsteady traffic*
- *Slippery or winding roads*
- *Similar restrictions that require inconsistent speed*

▼Cruise Main Indicator Light (Amber)/Cruise Set Indicator Light (Green)

CRUISE

The indicator light has two colors.

Cruise Main Indicator Light (Amber)

The indicator light illuminates amber when the ON switch is pressed and the cruise control system is activated.

Cruise Set Indicator Light (Green)

The indicator light illuminates green when a cruising speed has been set.

▼Activation/Deactivation

To activate the system, press the ON switch.
The cruise main indicator light illuminates.

To deactivate the system, press the OFF switch.
The cruise main indicator light turns off.

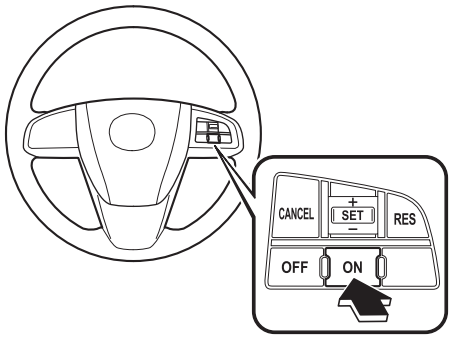

⚠ WARNING

Always turn off the cruise control system when it is not in use:

Leaving the cruise control system in an activation-ready state while the cruise control is not in use is dangerous as the cruise control could unexpectedly activate if the activation button is accidentally pressed, and result in loss of vehicle control and an accident.

▼To Set Speed

1. Activate the cruise control system by pressing the ON switch.
2. Accelerate to the desired speed, which must be more than 30 km/h (19 mph).

3. Set the cruise control by pressing the cruise control SET + /SET - switch up or down at the desired speed. The cruise control is set at the moment the cruise control SET + /SET - switch is pressed up or down. Release the accelerator pedal simultaneously.

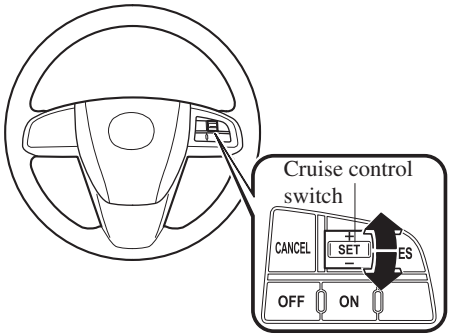

NOTE

- *Release the cruise control switch at the desired speed, otherwise the speed will continue increasing while the switch is pressed up, and continue decreasing while it is pressed down (except when the accelerator pedal is depressed).*
- *On a steep grade, the vehicle may momentarily slow down while ascending, or speed up while descending.*
- *Cruise control will turn off if the vehicle speed decreases below 30 km/h (19 mph) when cruise is activated, such as when climbing a steep grade.*

▼To Increase Cruising Speed

Follow either of these procedures.

<u>To increase speed using cruise control switch</u>

Press up the cruise control SET + switch and hold it. Your vehicle will accelerate. Release the switch at the speed you want.

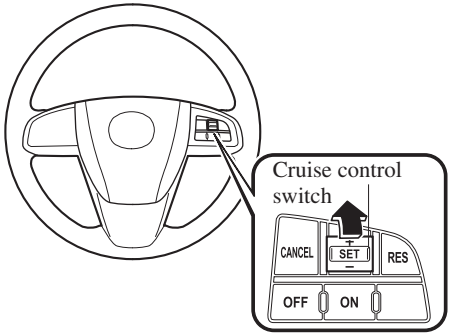

Your vehicle has a tap-up feature that allows you to increase your current speed in increments of 1.6 km/h (1 mph) by a momentary tap of the cruise control SET + switch. Multiple taps will increase your vehicle speed 1.6 km/h (1 mph) for each tap.

To increase speed using accelerator pedal

Depress the accelerator pedal to accelerate to the desired speed.
Press down or press up on the cruise control SET + /SET - switch and release it immediately.

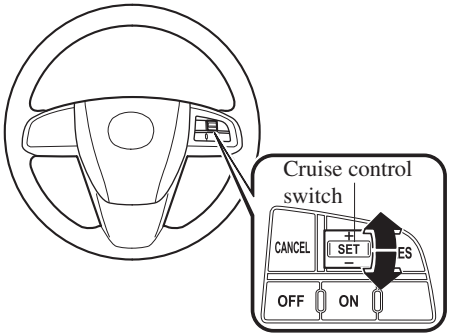

NOTE
Accelerate if you want to speed up temporarily when the cruise control is on. Greater speed will not interfere with or change the set speed. Take your foot off the accelerator to return to the set speed.

▼To Decrease Cruising Speed

Press down the cruise control SET - switch and hold it. The vehicle will gradually slow.
Release the switch at the speed you want.

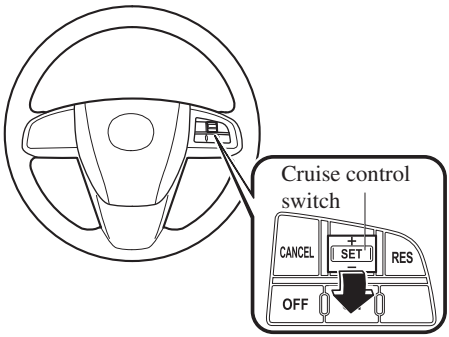

Your vehicle has a tap-down feature that allows you to decrease your current speed in decrements of 1.6 km/h (1 mph) by a momentary tap of the cruise control SET - switch. Multiple taps will decrease your vehicle speed 1.6 km/h (1 mph) for each tap.

▼To Resume Cruising Speed at More Than 30 km/h (19 mph)

If some other method besides the OFF switch was used to cancel cruising speed (such as applying the brake pedal) and the system is still activated, the most recent set speed will automatically resume when the RES switch is pressed.
If vehicle speed is below 30 km/h (19 mph), increase the vehicle speed up to 30 km/h (19 mph) or more and press the RES switch.

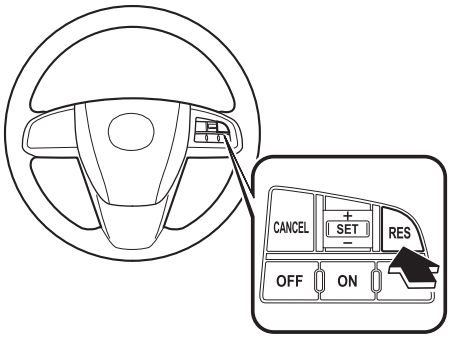

▼To Cancel

To cancel the system, use **one** of these methods:
- Press the OFF switch.
- Slightly depress the brake pedal.

- Press the CANCEL switch.

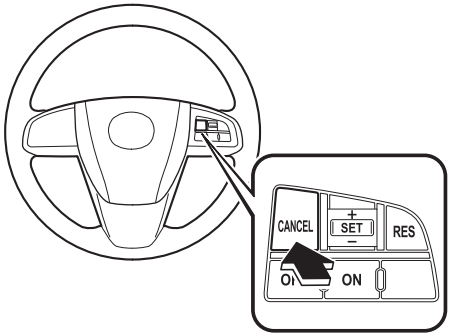

The system turns off when the ignition is switched off.

NOTE

Cruise control will cancel at about 15 km/h (9 mph) below the preset speed (such as may happen when climbing a long, steep grade).

Traction Control System (TCS)

The Traction Control System (TCS) enhances traction and safety by controlling engine torque and braking. When the TCS detects driving wheel slippage, it lowers engine torque and operates the brakes to prevent loss of traction.

This means that on a slick surface, the engine adjusts automatically to provide optimum power to the drive wheels, limiting wheel spin and loss of traction.

⚠ WARNING

Do not rely on the traction control system as a substitute for safe driving:

The traction control system (TCS) cannot compensate for unsafe and reckless driving, excessive speed, tailgating (following another vehicle too closely), and hydroplaning (reduced tire friction and road contact because of water on the road surface). You can still have an accident.

Use snow tires or tire chains and drive at reduced speeds when roads are covered with ice and/or snow:

Driving without proper traction devices on snow and/or ice-covered roads is dangerous. The traction control system (TCS) alone cannot provide adequate traction and you could still have an accident.

⚠ CAUTION

Do not rely on the TCS to maintain constant control of the vehicle under severe or maximum handling conditions. If the TCS operates frequently due to severe driving conditions, the TCS may stop operating to protect the brakes from overheating. After the brakes have cooled down, the TCS resumes normal operation.

▼TCS/DSC/RSC Indicator Light

This indicator light stays on for a few seconds when the ignition is switched ON. If the TCS or DSC/RSC is operating, the indicator light flashes.

If the light stays on, the TCS, DSC/RSC or the brake assist system may have a malfunction and they may not operate correctly. Take your vehicle to an Authorized Mazda Dealer.

NOTE

- *In addition to the indicator light flashing, a slight lugging sound will come from the engine. This indicates that the TCS is operating properly.*
- *On slippery surfaces, such as fresh snow, it will be impossible to achieve high rpm when the TCS is on.*

▼TCS OFF Indicator Light

TCS OFF

This indicator light stays on for a few seconds when the ignition is switched ON.
It also illuminates when the TCS OFF switch is pressed and TCS is switched off. Refer to TCS OFF Switch on page 5-25.
If the light remains illuminated and the TCS is not switched off, take your vehicle to an Authorized Mazda Dealer. The dynamic stability control may have a malfunction.

NOTE

If the TCS/DSC indicator light and the TCS OFF indicator light remain illuminated even after switching the ignition from ON to OFF, and back to ON, attempt the procedure again. If this still does not resolve the issue, consult an Authorized Mazda Dealer.

▼TCS OFF Switch

If the vehicle speed is less than 15 km/h (9 mph), press the TCS OFF switch to turn off the TCS. The TCS OFF indicator light will illuminate.

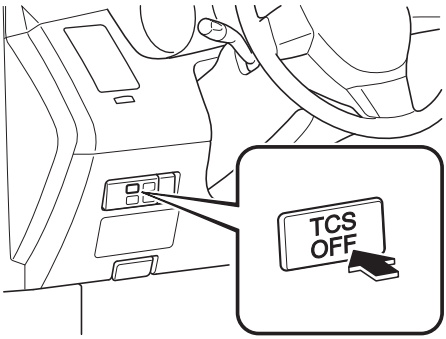

Press the switch again to turn the TCS back on. The TCS OFF indicator light will turn off. If the vehicle speed is more than 15 km/h (9 mph), the TCS OFF indicator light will not illuminate even if the switch is pressed.

NOTE

- *When TCS is on and you attempt to free the vehicle when it is stuck, or drive it out of freshly fallen snow, the TCS will activate. Depressing the accelerator will not increase engine power and freeing the vehicle may be difficult. When this happens, turn off the TCS.*
- *If the TCS is off when the engine is turned off, it automatically activates when the ignition is switched ON.*
- *Leaving the TCS on will provide the best traction.*
- *If the TCS is OFF when the vehicle speed is more than 15 km/h (9 mph), it automatically activates and the TCS OFF indicator light will turn off.*
- *If the TCS OFF switch is pressed and held for 10 seconds or more, the TCS OFF switch malfunction detection function operates and the TCS and DSC/RSC system activates automatically. The TCS OFF indicator light turns off while the TCS system is operative.*

Dynamic Stability Control (DSC)/Roll Stability Control (RSC)

The Dynamic Stability Control (DSC) automatically controls braking and engine torque in conjunction with systems such as ABS and TCS to help control side slip when driving on slippery surfaces or during sudden or evasive maneuvering, enhancing vehicle safety.

The Roll Stability Control (RSC) automatically controls braking and engine torque in conjunction with systems such as ABS and TCS to help control rolling when cornering at a higher speed or during sudden or evasive maneuvering, enhancing vehicle safety.

Refer to ABS (page 5-8) and TCS (page 5-23).

DSC/RSC operation is possible at speeds greater than 15 km/h (9 mph).

⚠ WARNING

Do not rely on the dynamic stability control as a substitute for safe driving:

The dynamic stability control (DSC)/ Roll Stability Control (RSC) cannot compensate for unsafe and reckless driving, excessive speed, tailgating (following another vehicle too closely), and hydroplaning (reduced tire friction and road contact because of water on the road surface). You can still have an accident.

When driving under bad road conditions, lower the vehicle speed and drive carefully:

Reckless driving and excessive speed under any road conditions is dangerous as it reduces vehicle stability and operability which could result in an accident.

CAUTION

- *The DSC/RSC may not operate correctly unless the following are observed:*
  - *Use tires of the correct size specified for your Mazda on all four wheels.*
  - *Use tires of the same manufacturer, brand and tread pattern on all four wheels.*
  - *Do not mix worn tires.*
- *The DSC/RSC may not operate correctly when tire chains are used or a temporary spare tire is installed because the tire diameter changes.*
- *Do not modify the suspension, steering wheel, and tires. It may affect the DSC/RSC.*
- *Do not install non-genuine speakers since their vibration may affect the Dynamic Stability Control (DSC)/Roll Stability Control (RSC) sensors.*

▼TCS/DSC/RSC Indicator Light

This indicator light stays on for a few seconds when the ignition is switched ON. If the TCS or DSC/RSC is operating, the indicator light flashes.

If the light stays on, the TCS, DSC/RSC or the brake assist system may have a malfunction and they may not operate correctly. Take your vehicle to an Authorized Mazda Dealer.

Tire Pressure Monitoring System*

The tire pressure monitoring system (TPMS) monitors the pressure for each tire.
If tire pressure is too low in one or more tires, the system will inform the driver via the warning light in the instrument panel and by the warning beep sound.

The tire pressure sensors installed on each wheel send tire pressure data by radio signal to the receiver unit in the vehicle.

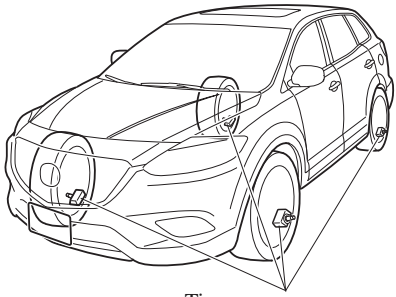

NOTE
When the ambient temperature is low due to seasonal changes, tire temperatures are also lower. When the tire temperature decreases, the air pressure decreases as well. The TPMS warning light may illuminate more frequently. Visually inspect the tires daily before driving, and check tire pressures monthly with a tire pressure gauge. When checking tire pressures, use of a digital tire pressure gauge is recommended.

TPMS does not alleviate your need to check the pressure and condition of all four tires regularly.

*Some models.

⚠ CAUTION

Each tire, including the spare (if provided), should be checked monthly when cold and inflated to the inflation pressure recommended by the vehicle manufacturer on the vehicle placard or tire inflation pressure label. (If your vehicle has tires of a different size than the size indicated on the vehicle placard or tire inflation pressure label, you should determine the proper tire inflation pressure for those tires.)
As an added safety feature, your vehicle has been equipped with a tire pressure monitoring system (TPMS) that illuminates a low tire pressure telltale when one or more of your tires is significantly under-inflated. Accordingly, when the low tire pressure telltale illuminates, you should stop and check your tires as soon as possible, and inflate them to the proper pressure. Driving on a significantly under-inflated tire causes the tire to overheat and can lead to tire failure. Underinflation also reduces fuel efficiency and tire tread life, and may affect the vehicle's handling and stopping ability.
Please note that the TPMS is not a substitute for proper tire maintenance, and it is the driver's responsibility to maintain correct tire pressure, even if underinflation has not reached the level to trigger illumination of the TPMS low tire pressure telltale.
Your vehicle has also been equipped with a TPMS malfunction indicator to indicate when the system is not operating properly.
The TPMS malfunction indicator is combined with the low tire pressure telltale. When the system detects a malfunction, the telltale will flash for approximately one minute and then remain continuously illuminated. This sequence will continue upon subsequent vehicle start-ups as long as the malfunction exists. When the malfunction indicator is illuminated, the system may not be able to detect or signal low tire pressure as intended. TPMS malfunctions may occur for a variety of reasons, including the installation of replacement or alternate tires or wheels on the vehicle that prevent the TPMS from functioning properly. Always check the TPMS malfunction telltale after replacing one or more tires or wheels on your vehicle to ensure that the replacement or alternate tires and wheels allow the TPMS to continue to function properly.
To avoid false readings, the system samples for a little while before indicating a problem. As a result it will not instantaneously register a rapid tire deflation or blow out.

NOTE

This device complies with part 15 of the FCC Rules. Operation is subject to the following two conditions: (1) This device may not cause harmful interference, and (2) this device must accept any interference received, including interference that may cause undesired operation.

▼Tire Pressure Monitoring System Warning Light

This warning light illuminates for a few seconds when the ignition is switched ON.

Thereafter, the warning light illuminates and a beep is heard when tire pressure is too low in one or more tires, and flashes when there is a system malfunction.

WARNING

If the tire pressure monitoring system warning light illuminates or flashes, or the tire pressure warning beep sound is heard, decrease vehicle speed immediately and avoid sudden maneuvering and braking:

If the tire pressure monitoring system warning light illuminates or flashes, or the tire pressure warning beep sound is heard, it is dangerous to drive the vehicle at high speeds, or perform sudden maneuvering or braking. Vehicle drivability could worsen and result in an accident.
To determine if you have a slow leak or a flat, pull over to a safe position where you can check the visual condition of the tire and determine if you have enough air to proceed to a place where air may be added and the system monitored again by an Authorized Mazda Dealer or a tire repair station.

Do not ignore the TPMS Warning Light:

Ignoring the TPMS warning light is dangerous, even if you know why it is illuminated. Have the problem taken care of as soon as possible before it develops into a more serious situation that could lead to tire failure and a dangerous accident.

Warning light illuminates/Warning beep sounds

When the warning light illuminates, and the warning beep sound is heard (about 3 seconds), tire pressure is too low in one or more tires.

Adjust the tire pressure to the correct tire pressure. Refer to the specification charts (page 10-6).

⚠ CAUTION

When replacing/repairing the tires or wheels or both, have the work done by an Authorized Mazda Dealer, or the tire pressure sensors may be damaged.

NOTE

- *Perform tire pressure adjustment when the tires are cold. Tire pressure will vary according to the tire temperature, therefore let the vehicle stand for 1 hour or only drive it 1.6 km (1 mile) or less before adjusting the tire pressures. When pressure is adjusted on hot tires to the cold inflation pressure, the TPMS warning light/beep may turn on after the tires cool and pressure drops below specification.*
  Also, an illuminated TPMS warning light, resulting from the tire air pressure dropping due to cold ambient temperature, may turn off if the ambient temperature rises. In this case, it will also be necessary to adjust the tire air pressures. If the TPMS warning light illuminates due to a drop in tire air pressure, make sure to check and adjust the tire air pressures.
- *After adjusting the tire air pressures, it may require some time for the TPMS warning light to turn off. If the TPMS warning light remains illuminated, drive the vehicle at a speed of at least 25 km/h (16 mph) for 10 minutes, and then verify that it turns off.*
- *Tires lose air naturally over time and the TPMS cannot tell if the tires are getting too soft over time or you have a flat. However, when you find one low tire in a set of four- that is an indication of trouble; you should have someone drive the vehicle slowly forward so you can inspect any low tire for cuts and any metal objects sticking through tread or sidewall. Put a few drops of water in the valve stem to see if it bubbles indicating a bad valve. Leaks need to be addressed by more than simply refilling the trouble tire as leaks are dangerous - take it to an Authorized Mazda Dealer which has all the equipment to fix tires, TPMS systems and order the best replacement tire for your vehicle.*

If the warning light illuminates again even after the tire pressures are adjusted, there may be a tire puncture. Replace the punctured tire with the temporary spare tire (page 7-8).

NOTE
A tire pressure sensor is not installed to the temporary spare tire. The warning light will flash continuously while the temporary spare tire is being used.

Warning light flashes

When the warning light flashes, there may be a system malfunction. Consult an Authorized Mazda Dealer.

▼System Error Activation

When the TPMS warning light flashes, there may be a system malfunction. Consult an Authorized Mazda Dealer.
A system error activation may occur in the following cases:

- When there is equipment or a device near the vehicle using the same radio frequency as that of the tire pressure sensors.
- When using the following devices in the vehicle that may cause radio interference with the receiver unit.
  - A digital device such as a personal computer.
  - A current converter device such as a DC-AC converter.
- When excess snow or ice adheres to the vehicle, especially around the wheels.
- When the tire pressure sensor batteries are exhausted.
- When using a wheel with no tire pressure sensor installed.
- When using tires with steel wire reinforcement in the side walls.
- When using tire chains.

▼Tires and Wheels

⚠ CAUTION

When inspecting or adjusting the tire air pressures, do not apply excessive force to the stem part of the wheel unit. The stem part could be damaged.

Changing tires and wheels

The following procedure allows the TPMS to recognize a tire pressure sensor's unique ID signal code whenever tires or wheels are changed, such as changing to and from winter tires.

NOTE
Each tire pressure sensor has a unique ID signal code. The signal code must be registered with the TPMS before it can work. The easiest way to do it is to have an Authorized Mazda Dealer change your tire and complete ID signal code registration.

When having tires changed at an Authorized Mazda Dealer

When an Authorized Mazda Dealer changes your vehicle's tires, they will complete the tire pressure sensor ID signal code registration.

When changing tires yourself

If you or someone else changes tires, you or someone else can also undertake the steps for the TPMS to complete the ID signal code registration.

1. After tires have been changed, switch the ignition ON, then back to ACC or OFF.
2. Wait for about 15 minutes.

3. After about 15 minutes, drive the vehicle at a speed of at least 25 km/h (16 mph) for 10 minutes and the tire pressure sensor ID signal code will be registered automatically.

NOTE
If the vehicle is driven within about 15 minutes of changing tires, the tire pressure monitoring system warning light will flash because the sensor ID signal code would not have been registered. If this happens, park the vehicle for about 15 minutes, after which the sensor ID signal code will register upon driving the vehicle for 10 minutes.

Replacing tires and wheels

⚠ CAUTION

- ➢ *When replacing/repairing the tires or wheels or both, have the work done by an Authorized Mazda Dealer, or the tire pressure sensors may be damaged.*
- ➢ *The wheels equipped on your Mazda are specially designed for installation of the tire pressure sensors. Do not use non-genuine wheels, otherwise it may not be possible to install the tire pressure sensors.*

Be sure to have the tire pressure sensors installed whenever tires or wheels are replaced.
When having a tire or wheel or both replaced, the following types of tire pressure sensor installations are possible.

- The tire pressure sensor is removed from the old wheel and installed to the new one.
- The same tire pressure sensor is used with the same wheel. Only the tire is replaced.
- A new tire pressure sensor is installed to a new wheel.

NOTE
- *The tire pressure sensor ID signal code must be registered when a new tire pressure sensor is purchased. For purchase of a tire pressure sensor and registration of the tire pressure sensor ID signal code, consult an Authorized Mazda Dealer.*
- *When reinstalling a previously removed tire pressure sensor to a wheel, replace the grommet (seal between valve body/sensor and wheel) for the tire pressure sensor.*

Blind Spot Monitoring (BSM) System*

The Blind Spot Monitoring (BSM) system is designed to assist the driver by monitoring blind spots on both sides of the vehicle to the rear in certain situations such as when changing lanes on roads and freeways.

The BSM system monitors the detection areas on both sides of the vehicle to the rear when the vehicle speed is about 32 km/h (20 mph) or more, and notifies the driver of vehicles in the detection area by illuminating the BSM warning light.
If the turn signal lever is operated in the direction the BSM warning light is illuminated, the system warns the driver of the vehicle in the detection area with a beep sound.

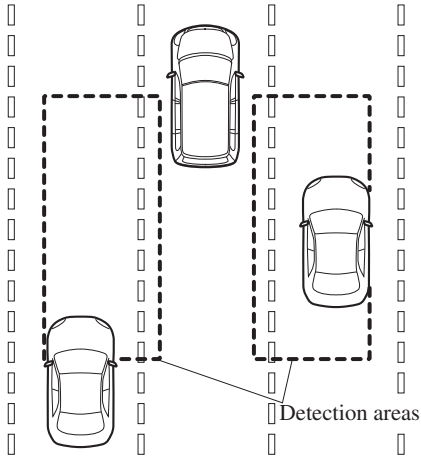

⚠ WARNING

Do not rely completely on the BSM system and be sure to look over your shoulder before changing lanes:

The BSM system can assist the driver in confirming the safety of the surroundings but is not a complete substitute. The driver is responsible for assuring lane changes and other maneuvers. Always pay attention to the direction in which the vehicle is traveling and the vehicle's surroundings.

NOTE

- *The BSM system does not operate when the vehicle speed is lower than about 32 km/h (20 mph).*
- *The radar sensors are equipped inside the rear bumper. (page 5-37)*
- *The system may not operate normally when towing a trailer. Turn off the system by operating the BSM OFF switch when towing a trailer.*
- *The radar sensors do not detect human, animal, or static objects such as fences. In addition, the system pauses when the selector lever is shifted to the R position. (The system resumes automatically when the selector lever is shifted from the R position.)*

 *Some models.

- *The detectability of the radar sensors has its limitations. The BSM system may not operate properly under the following conditions:*
  - *Ice, snow, or soil adheres to the rear bumper surface around the radar sensors.*
  - *During adverse weather conditions such as rain or snow, or under conditions where water is sprayed.*
  - *The rear bumper area around the radar sensors is blocked by foreign material (such as stickers or a bicycle carrier).*
- *The radar sensors may not detect all types of vehicles around your vehicle, especially the following types of vehicles:*
  - *Motorcycles*
  - *Vehicles with body shapes that radar may not reflect such as a flatbed trailer with no cargo.*
  - *Vehicles with lower body height such as sports cars.*
- *Have the radar sensors inspected at an Authorized Mazda Dealer if any shock is applied to the rear bumper, even in a minor accident. If the vehicle is driven with a damaged radar sensor, the system may not operate properly resulting in an accident.*
- *For repairs or paintwork around the radar sensors, or replacement of the bumper, consult an Authorized Mazda Dealer.*
- *The radar sensors of the BSM system may be regulated under the radio wave related laws of the country where the vehicle is driven. The sensors in this system are approved for use in the U.S.A. (including territories), Canada, and Mexico. If a vehicle with a BSM system is driven in a country other than the U.S.A., Canada, or Mexico, the system has to be turned off using the BSM OFF switch.*
- *The detection area of the system has been determined based on the lane width of general freeways. Therefore on a road with a narrower lane width, the system may detect vehicles on a lane next to the adjacent lane and operate the warning light/beep. On a road with wider lane width, the system may not detect vehicles on the adjacent lane and may not operate the warning light/beep.*
- *Operation of the warning light/beep may be delayed or the system may not operate the warning light/beep under the following conditions:*
  - *The vehicle accelerates from a standing-start with a vehicle alongside.*
  - *A vehicle moves from a lane two lanes over to the adjacent lane.*
  - *The difference in vehicle speed between your vehicle and another vehicle is larger when passing or being passed, and the vehicle passes the detection area within a short period of time.*
  - *On a steep incline, or when there is a difference in height between lanes.*
  - *Immediately after the system has been activated by pressing the BSM OFF switch again after it has been turned off (BSM OFF indicator light in instrument panel illuminates) by pressing the switch.*
- *Although the system may detect objects on the road side such as parked vehicles or guardrails and operate the warning light/beep, it does not indicate a malfunction.*
- *If the vehicle is driven on a road with less traffic and few vehicles that the radar sensors can detect, the system may pause (The BSM OFF indicator light in the instrument panel flashes). However, it does not indicate a malfunction.*

- *The following conditions may affect the visibility of the BSM warning lights on the outside mirror, making it difficult to confirm the illumination of the lights:*
  - *Ice or snow adheres to the surface of the outside mirrors.*
  - *The door window glass is tinted.*

▼BSM Warning Light/Beep

BSM warning light

Equipped on the left and right door mirrors.

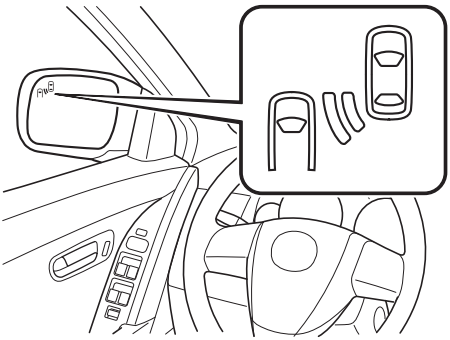

This warning light illuminates for a few seconds when the ignition is switched ON.
If the BSM system detects a vehicle in the detection area while the vehicle is driven at a speed of about 32 km/h (20 mph) or more, the BSM warning light illuminates on the side of the vehicle where the rear on-coming vehicle is detected.

NOTE

- *If ice or snow adhere to the outer mirror surface, the BSM warning light may not be visible.*
- *If the door window glass is tinted, it may affect the visibility of the BSM warning light, making it difficult to confirm the illumination of the light.*

BSM warning beep

The warning beep operates when the turn signal lever is operated to the side where the BSM warning light is illuminated.

NOTE

The system can be personalized so that the BSM warning beep does not operate. Refer to Personalization Features on page 10-8.

▼BSM OFF Indicator Light

This indicator light illuminates for a few seconds when the ignition is switched ON.

The BSM OFF indicator light illuminates when the BSM system is turned off by pressing the BSM OFF switch.
The indicator light flashes if the BSM system has a malfunction. Consult an Authorized Mazda Dealer.

NOTE

If the vehicle is driven on a road with less traffic and few vehicles that the radar sensors can detect, the system may pause (The BSM OFF indicator light in the instrument panel flashes). However, it does not indicate a malfunction.

▼BSM OFF Switch

When the BSM switch is pressed, the BSM system turns off and the BSM OFF indicator light illuminates.

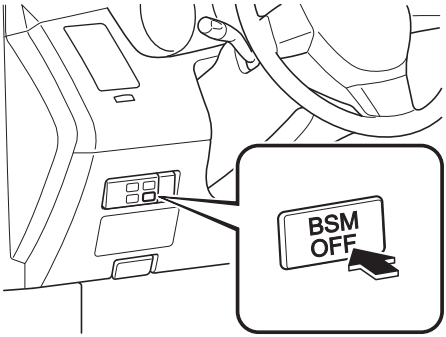

Press the BSM OFF switch again to turn on the BSM system. The BSM OFF indicator light turns off.

NOTE

- *The system may not operate normally when towing a trailer. Turn off the system by operating the BSM OFF switch when towing a trailer.*
- *If the ignition is switched off with the BSM system turned off, the system becomes operable automatically when the ignition is switched ON.*

▼Care of Radar Sensors

The radar sensors are equipped inside the rear bumper.

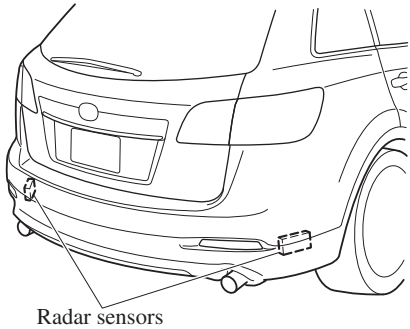

Always keep the bumper surface near the radar sensor area clean so that the BSM system operates normally. Refer to the Exterior Care (page 8-58).

NOTE

- *The BSM OFF indicator light flashes if the radar sensors cannot operate normally. If the light remains flashing after cleaning the bumper surface near the radar sensor area, consult an Authorized Mazda Dealer.*
- *For repairs or paintwork around the radar sensors, or replacement of the bumper, consult an Authorized Mazda Dealer.*

▼Safety Certification

Radiation Hazard

This BSM (blind spot monitoring) device emits intentional electromagnetic radiation in the 24 GHz to 25 GHz frequency range. The total radiated average power over the entire bandwidth is below –14 dBm (40 μW). The active emitting antenna surface is 72 cm^2; therefore the radiated power density in front of the BSM device is 0.55 $\mu W/cm^2$. This value is far below the legal human exposure protection limit of 1 mW/cm^2 (MPE) in Europe and US.

Declaration of compliance for 24 GHz blind spot radar

(U.S.A)

FCC ID: OAYBSDTX
This vehicle is equipped with a 24 GHz blind spot monitoring (BSM) radar system, which complies with part 15 of the FCC rules. Operation is subject to the following conditions:

1. This device may not cause harmful interference, and
2. This device must accept any interference received, including interference that may cause undesired operation.
3. This device may only work when the vehicle is in operation pursuant to § 15. 252 (a) (4).

(CANADA)

IC: 4135A-BSDTX
This device complies with the radio standards specification RSS-220 of Industry Canada. Operation is subject to the following two conditions:

(1) This device may not cause harmful interference.

(2) This device must accept any interference received, including interference that may cause undesired operation.

Le présent appareil est conforme aux CNR d'Industrie RSS-220 applicables aux appareils radio exempts de licence. L'exploitation est autorisée aux deux conditions suivantes:

(1) l'appareil ne doit pas produire de brouillage, et

(2) l'utilisateur de l'appareil doit accepter tout brouillage radioélectrique subi, même si le brouillage est susceptible d'en compromettre le fonctionnement.

(MEXICO)

Certificado de homologacion: RLVCOBS10-0567
Continental BSDTX
Este equipo opera a titulo secundario, consecuentemente, debe aceptar interferencias perjudiciales incluyendo equipos de la misma clase y puede no causar interferencias a sistemas operando a titulo primario.
Cofetel notice:
"La operación de este equipo está sujeta a las siguientes dos condiciones:

(1) es posible que este equipo o dispositivo no cause interferencia perjudicial y

(2) este equipo o dispositivo debe aceptar cualquier interferencia, incluyendo la que pueda causar su operación no deseada."

ATTENTION:
Cofetel requires that their notice is printed on the user manual in Spanish with the exact words above.

If the user manual in Spanish does not contain the notice it will not be accepted by Cofetel and they will not grant NOM-121 certificate.

Moreover, it is important to tell your customer that Cofetel inspectors are checking the user manual in Spanish that is included with the product. If the manual does not contain Cofetel notice as above, they will put a penalty to the importer and distribtor.

NOTE
During printing time of this user manual the approvals listed above are granted. Further countries may become available or actual certification identifiers may be subject to change or update.

⚠ WARNING

Changes or modifications not expressively approved by the party responsible for compliance could void the user's authority to operate the equipment.

Parking Sensor System

The parking sensor system uses ultrasonic sensors to detect obstructions around the vehicle while parking the vehicle in a garage or during parallel parking when the vehicle is driven at a speed of about 10 km/h (6 mph) or less. The system is equipped with an assist device to notify the driver of the approximate distance from the vehicle to the surrounding obstruction using a beep sound.

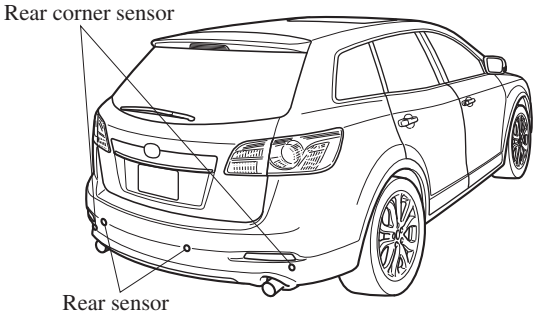

WARNING

Do not rely completely on the parking sensor system and be sure to confirm the safety around your vehicle visually when driving.

This system can assist the driver in operating the vehicle in the forward and backward directions while parking. The detection ranges of the sensors are limited, therefore, driving the vehicle while relying only on the system may cause an accident. Always confirm the safety around your vehicle visually when driving.

NOTE

- *Do not install any accessories within the detection ranges of the sensors. It may affect the system operation.*
- *Depending on the type of obstruction and the surrounding conditions, the detection range of a sensor may narrow, or the sensors may not be able to detect obstructions.*
- *The system may not operate normally under the following conditions:*
  - *Mud, ice, or snow is adhering to the sensor area (Returns to normal operation when removed).*
  - *The sensor area is frozen (Returns to normal operation when the ice is thawed).*
  - *The sensor is covered by a hand.*
  - *The sensor is excessively shocked.*
  - *The vehicle is excessively tilted.*
  - *Under extremely hot or cold weather conditions.*
  - *The vehicle is driven on bumps, inclines, gravel, or grass covered roads.*
  - *Anything which generates ultrasound is near the vehicle, such as another vehicle's horn, the engine sound of a motorcycle, the air brake sound of a large-sized vehicle, or another vehicle's sensors.*
  - *The vehicle is driven in heavy rain or in road conditions causing water-splash.*
  - *A commercially-available fender pole or an antenna for a radio transmitter is installed to the vehicle.*
  - *The vehicle is moving towards a tall or square curbstone.*
  - *An obstruction is too close to the sensor.*
- *Obstructions under the bumper may not be detected. Obstructions that are lower than the bumper or thin which may have been initially detected but are no longer detected as the vehicle approaches more closely.*
- *The following types obstructions may not be detected:*
  - *Thin objects such as wire or rope*
  - *Things which absorb sonic waves easily such as cotton or snow*
  - *Angular shaped objects*
  - *Very tall objects, and those which are wide at the top*
  - *Small, short objects*
- *Always have the system inspected at an Authorized Mazda Dealer if any shock is applied to the bumpers, even in a minor accident. If the sensors are deviated, they cannot detect obstructions.*
- *The system may have a malfunction if the beep does not operate or the indicator light does not illuminate when the park assist sensors switch is turned on. Consult an Authorized Mazda Dealer.*
- *The system may have a malfunction if the beep sound which indicates a system malfunction is heard and the indicator light flashes. Consult an Authorized Mazda Dealer.*
- *The beeper which indicates a system malfunction may not be heard if the ambient temperature is extremely cold, or mud, ice, or snow adheres to the sensor area. Remove any foreign material from the sensor area.*

▼Sensor Detection Range

The sensors detect obstructions within the following range.

Unit: cm (in)

A: About 150 (About 59.1)
B: About 150 (About 59.1)

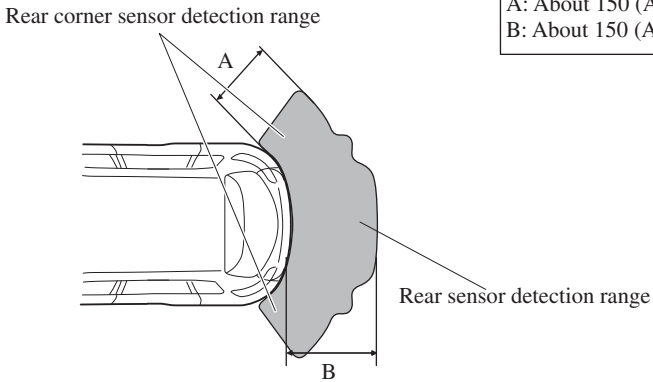

▼Park Assist Sensors Switch

The switch can be used when the ignition is switched ON, the shift lever is in any position except reverse (R), and the vehicle speed is about 10 km/h (6 mph) or less.
When the parking sensor switch is pressed, a beep sound is heard and the indicator light in the switch illuminates.

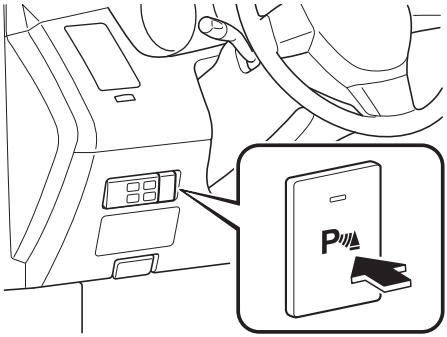

The system is cancelled under the following conditions:
- The vehicle speed is 10 km/h (6 mph) or more.
- The parking sensor switch is pressed while the parking sensor is in operation.

NOTE
If the system is cancelled, it will not restore automatically even when the vehicle speed is decreased to 10 km/h or less.

Operation Conditions

The system can be used when the ignition is switched ON.
The sensors detect obstructions under the following conditions:

Sensor	Condition
Rear Sensor	The shift lever is in reverse (R).
Rear Corner Sensor	The shift lever is in reverse (R), and the vehicle speed is about 10 km/h (6 mph) or less.

▼Parking Sensor Warning Beep

The beeper sounds as follows while the system is operating.

Distance between vehicle and obstruction		Beeper sound*1
Rear Sensor	Rear Corner Sensor	
Approx. 150—100 cm (59.0—39.3 in) 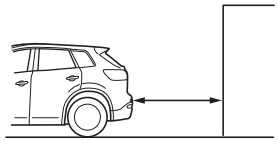	Approx. 150—100 cm (59.0—39.3 in) 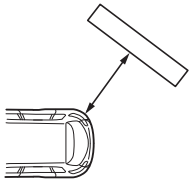	Slow intermittent sound
Approx. 100—50 cm (39.3—19 in) 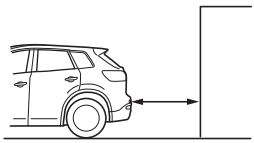	Approx. 100—50 cm (39.3—19 in) 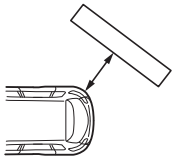	Medium intermittent sound
Approx. 50—30 cm (19—11 in) 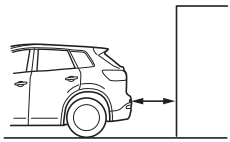	Approx. 50—30 cm (19—11 in) 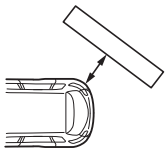	Fast intermittent sound
Within approx. 30 cm (11 in) 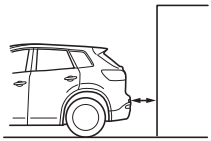	Within approx. 30 cm (11 in) 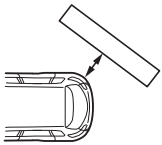	Continuous sound

*1 The speed of the intermittent sound increases as the vehicle approaches the obstruction.

▼When Warning Beep is Activated

The system notifies the driver of an abnormality by activating the beep sound.

Beep	How to check	
The beep sound is not heard.	The system may have a malfunction. Have the vehicle inspected at an Authorized Mazda Dealer as soon as possible.	
1 consecutive beep	Corner Left Sensor	Remove any foreign material from the sensor area. If the system does not recover, have the vehicle inspected at an Authorized Mazda Dealer.
2 consecutive beeps	Left Sensor	
3 consecutive beeps	Right Sensor	
4 consecutive beeps	Corner Right Sensor	

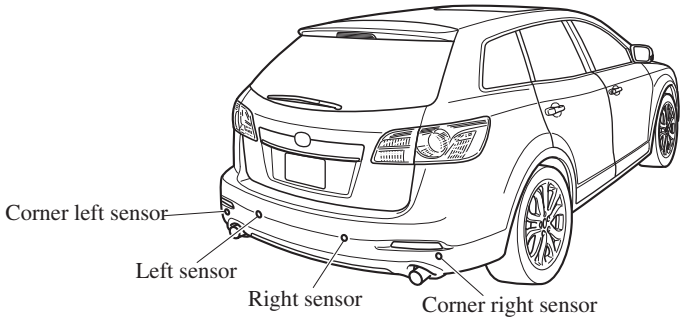

Meters and Gauges

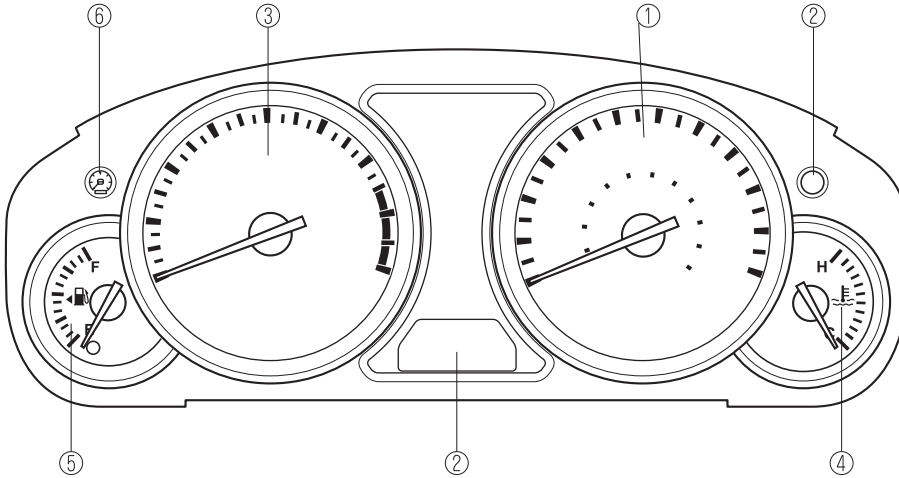

① Speedometer ..... page 5-46
② Odometer, Trip Meter and Trip Meter Selector ..... page 5-46
③ Tachometer ..... page 5-47
④ Engine Coolant Temperature Gauge ..... page 5-47
⑤ Fuel Gauge ..... page 5-48
⑥ Dashboard Illumination ..... page 5-48

NOTE
When the ignition is switched ON, the dashboard gauges illuminate.

▼Speedometer

The speedometer indicates the speed of the vehicle.

▼Odometer, Trip Meter and Trip Meter Selector

The display mode can be changed between trip meter A and trip meter B by pressing the selector while one of them is displayed. The selected mode will be displayed.

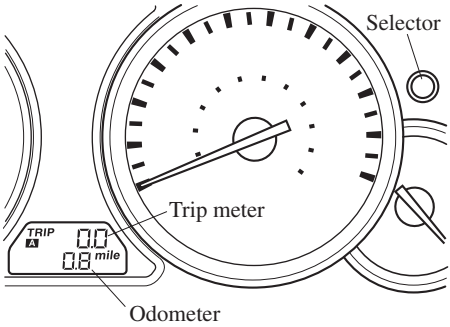

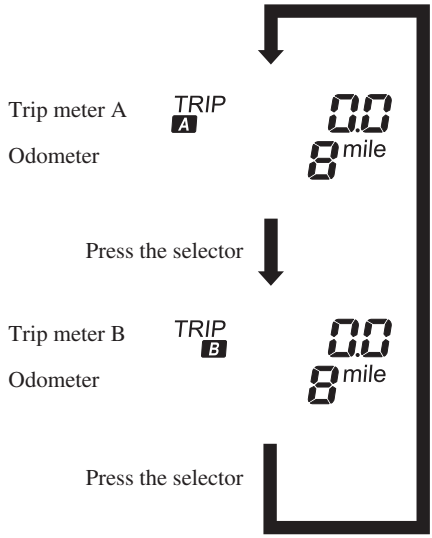

Odometer

The odometer records the total distance the vehicle has been driven.

Trip meter

The trip meter can record the total distance of two trips. One is recorded in trip meter A, and the other is recorded in trip meter B.

For instance, trip meter A can record the distance from the point of origin, and trip meter B can record the distance from where the fuel tank is filled.

When trip meter A is selected, pressing the selector again within one second will change to trip meter B mode.

When trip meter A is selected, TRIP A will be displayed. When trip meter B is selected, TRIP B will be displayed.

The trip meter records the total distance the vehicle is driven until the meter is again reset. Return it to “0.0” by holding the selector depressed for 1 second or more. Use this meter to measure trip distances and to compute fuel consumption.

NOTE

- *Only the trip meters record tenths of kilometers (miles).*
- *The trip record will be erased when:*
  - *The power supply is interrupted (blown fuse or the battery is disconnected).*
  - *The vehicle is driven over 999.9 km (mile).*

▼Tachometer

The tachometer shows engine speed in thousands of revolutions per minute (rpm).

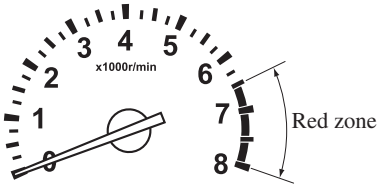

⚠ CAUTION

Do not run the engine with the tachometer needle in the RED ZONE. This may cause severe engine damage.

▼Engine Coolant Temperature Gauge

The engine coolant temperature gauge shows the temperature of the engine coolant.

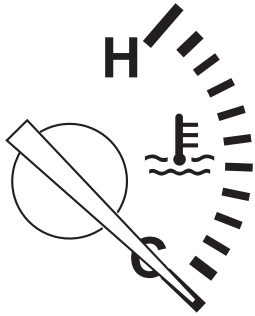

If the needle is near H, it indicates overheating.

⚠ CAUTION

Driving with an overheated engine can cause serious engine damage (page 7-16).

▼Fuel Gauge

The fuel gauge shows approximately how much fuel is remaining in the tank when the ignition is switched ON.
We recommend keeping the tank over 1/4 full. When the low fuel warning light illuminates or when the needle is near E, refuel as soon as possible.

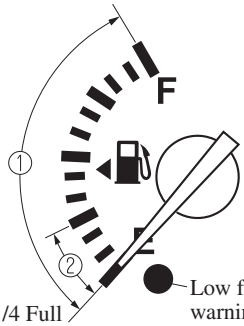

① Full
② Approx. 1/4 Full
Low fuel warning light

NOTE

- *After refueling, it may require some time for the needle to stabilize. In addition, the needle may deviate while driving on a slope or curve since the fuel moves in the tank.*
- *The direction of the arrow ( ) next to the low fuel warning light indicates that the fuel-filler lid is on the left side of the vehicle.*

▼Dashboard Illumination

Rotate the knob to adjust the brightness of the instrument cluster and other illuminations in the dashboard.

NOTE

- *The brightness of dashboard illuminations can be adjusted when the headlight switch is in the or position.*
- *When the dashboard illumination brightness cannot be adjusted any more, a beep sound will be heard.*

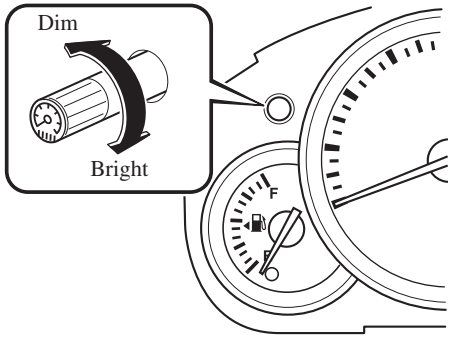

Canceling the illumination dimmer (Black-out meter and dashboard illuminations)

When the headlight switch is in the or position, the illumination of the instrument cluster and the information display dims.

When driving on snowy or foggy roads, or in other situations when the instrument cluster or information display's visibility is reduced due to glare from surrounding brightness, cancel the illumination dimmer and increase the illumination intensity.

To cancel the illumination dimmer, press the dashboard illumination knob.

NOTE

- *This symbol ( ) indicates the knob to adjust the brightness of the dashboard illumination.*
- *If the illumination dimmer is cancelled, the instrument cluster and the information display will not dim when the headlight switch is turned to the or position again. Press the dashboard illumination knob to activate the illumination dimmer.*

Warning/Indicator Lights

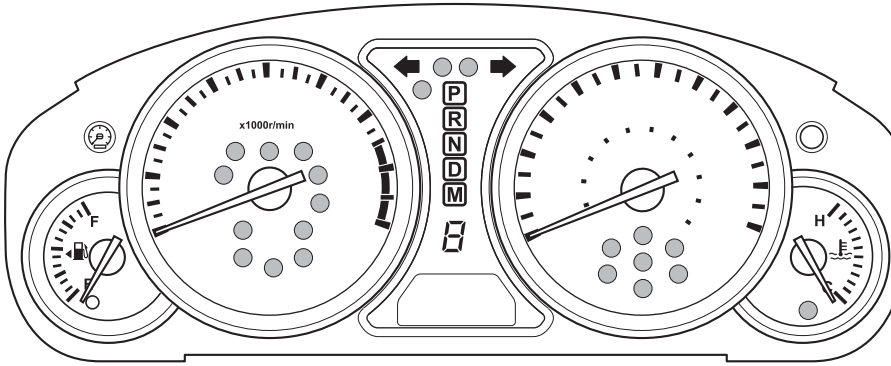

Warning/Indicator lights will appear in any of the highlighted areas

Signal	Warning/Indicator Lights	Page
BRAKE	Brake System Warning Light	5-51
	Malfunction Warning Light	5-52
	Charging System Warning Light	5-53
	Engine Oil Pressure Warning Light	5-53
	Check Engine Light	5-54
ABS	ABS Warning Light	5-52
	Air Bag/Front Seat Belt Pretensioner System Warning Light	5-54

Warning/Indicator Lights and Beep Sounds

Signal	Warning/Indicator Lights	Page
●	Low Fuel Warning Light	5-55
	Check Fuel Cap Warning Light	5-55
	Seat Belt Warning Light	5-55
	Door-Ajar Warning Light	5-55
	Low Washer Fluid Level Warning Light	5-55
AT	Automatic Transaxle Warning Light	5-55
4WD	AWD Warning Light	5-56
	Tire Pressure Monitoring System Warning Light	5-56
	KEY Warning Light (Red)/KEY Indicator Light (Green)	5-58
	Security Indicator Light	5-60
	Headlight High-Beam Indicator Light	5-60
PRNDM	Shift Position Indicator Light	5-60
	TCS/DSC/RSC Indicator Light	5-61
TCS OFF	TCS OFF Indicator Light	5-61
CRUISE	Cruise Main Indicator Light (Amber)/Cruise Set Indicator Light (Green)	5-61
BSM OFF	BSM OFF Indicator Light	5-62

Signal	Warning/Indicator Lights	Page
	Lights-On Indicator Light	5-62
	Turn Signal/Hazard Warning Indicator Lights	5-62

▼Brake System Warning Light

This warning has the following functions:

Parking brake warning

The light illuminates when the parking brake is applied with the ignition switched to START or ON. It turns off when the parking brake is fully released.

Low brake fluid level warning

If the light stays on after the parking brake is fully released, you may have a brake problem.

Drive to the side of the road and park off the right-of-way.

You may notice that the pedal is harder to depress or that it may go closer to the floor. In either case, it will take longer to stop the vehicle.

1. With the engine stopped, open the hood and check the brake fluid level immediately, and then add fluid if required (page 8-25).
2. After adding fluid, check the light again.

If the warning light remains on, or if the brakes do not operate properly, do not drive the vehicle. Have it towed to an Authorized Mazda Dealer.

Even if the light turns off, have your brake system inspected as soon as possible by an Authorized Mazda Dealer.

NOTE
Having to add brake fluid is sometimes an indicator of leakage. Consult an Authorized Mazda Dealer as soon as possible even if the brake light is no longer illuminated.

⚠ WARNING

Do not drive with the brake system warning light illuminated. Contact an Authorized Mazda Dealer to have the brakes inspected as soon as possible:

Driving with the brake system warning light illuminated is dangerous. It indicates that your brakes may not work at all or that they could completely fail at any time. If this light remains illuminated, after checking that the parking brake is fully released, have the brakes inspected immediately.

▼Malfunction Warning Light

This warning light illuminates for a few seconds when the ignition is switched ON.

If this light illuminates while driving, the vehicle may have a problem. It is important to note the driving conditions when the light illuminated and consult an Authorized Mazda Dealer.

The malfunction warning light may illuminate in the following cases:
- The engine's electrical system has a problem.
- The emission control system has a problem.
- The brake switch has a problem.

If the malfunction warning light remains on, do not drive at high speeds and consult an Authorized Mazda Dealer as soon as possible.

▼ABS Warning Light

The warning light stays on for a few seconds when the ignition is switched ON.

If the ABS warning light stays on while you're driving, the ABS control unit has detected a system malfunction. If this occurs, your brakes will function normally as if the vehicle had no ABS.
Should this happen, consult an Authorized Mazda Dealer as soon as possible.

NOTE
- *When the engine is jump-started to charge the battery, uneven rpm occurs and the ABS warning light may illuminate. If this occurs, it is the result of the weak battery and does not indicate an ABS malfunction.*
  Recharge the battery.
- *The brake assist system does not operate while the ABS warning light is illuminated.*

▼Electronic Brake Force Distribution System Warning

If the electronic brake force distribution control unit determines that some components are operating incorrectly, the control unit may illuminate the brake system warning light and the ABS warning light on simultaneously. The problem is likely to be the electronic brake force distribution system.

WARNING

Do not drive with both the ABS warning light and brake warning light illuminated. Have the vehicle towed to an Authorized Mazda Dealer to have the brakes inspected as soon as possible:

Driving when the brake system warning light and ABS warning light are illuminated simultaneously is dangerous.
When both lights are illuminated, the rear wheels could lock more quickly in an emergency stop than under normal circumstances.

▼Charging System Warning Light

This warning light illuminates when the ignition is switched ON and turns off when the engine is started.

If the warning light illuminates while driving, it indicates a malfunction of the alternator or of the charging system. Drive to the side of the road and park off the right-of-way. Consult an Authorized Mazda Dealer.

CAUTION

Do not continue driving when the charging system warning light is illuminated because the engine could stop unexpectedly.

▼Engine Oil Pressure Warning Light

This warning light illuminates when the ignition is switched ON and turns off when the engine is started.

This warning light indicates low engine oil pressure.

If the light illuminates while driving:

1. Drive to the side of the road and park off the right-of-way on level ground.
2. Turn off the engine and wait 5 minutes for the oil to drain back into the oil pan.
3. Inspect the engine oil level (page 8-22). If it's low, add the appropriate amount of engine oil while being careful not to overfill.
4. Start the engine and check the warning light.

If the light remains illuminated even after you add oil, stop the engine immediately and have your vehicle towed to an Authorized Mazda Dealer.

CAUTION

Do not run the engine if the oil pressure is low. It could result in extensive engine damage.

▼Check Engine Light

This indicator light illuminates when the ignition is switched ON and turns off when the engine is started.

If this light illuminates while driving, the vehicle may have a problem. It is important to note the driving conditions when the light illuminated and consult an Authorized Mazda Dealer.

The check engine light may illuminate in the following cases:
- The fuel tank level being very low or approaching empty.
- The engine's electrical system has a problem.
- The emission control system has a problem.
- The fuel-filler cap is missing or not tightened securely.

If the check engine light remains on or flashes continuously, do not drive at high speeds and consult an Authorized Mazda Dealer as soon as possible.

▼Air Bag/Front Seat Belt Pretensioner System Warning Light

If the air bag/front seat belt pretensioner system is working properly, the warning light illuminates when the ignition is switched ON or after the engine is cranked. The warning light turns off after a specified period of time.

A system malfunction is indicated if the warning light constantly flashes, constantly illuminates or does not illuminate at all when the ignition is switched ON. If any of these occur, consult an Authorized Mazda Dealer as soon as possible. The system may not operate in an accident.

⚠ WARNING

Never tamper with the air bag/ pretensioner systems and always have an Authorized Mazda Dealer perform all servicing and repairs:

Self-servicing or tampering with the systems is dangerous. An air bag/ pretensioner could accidentally activate or become disabled causing serious injury or death.

▼Low Fuel Warning Light

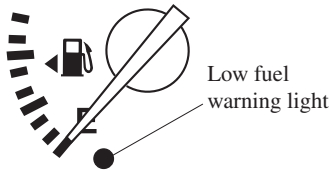

This warning light in the fuel gauge signals that the fuel tank will soon be empty.
Refuel as soon as possible.

▼Check Fuel Cap Warning Light

This warning light illuminates for a few seconds when the ignition is switched ON.

If the check fuel cap warning light illuminates while driving, the fuel-filler cap may not be installed properly. Stop the engine and reinstall the fuel-filler cap. Refer to Fuel-Filler Cap on page 3-48.

▼Seat Belt Warning Light

The seat belt warning light illuminates if the driver's seat belt is not fastened when the ignition switched ON.

▼Door-Ajar Warning Light

This warning light illuminates when any door or liftgate is not securely closed. Close the door or liftgate securely before driving the vehicle.

▼Low Washer Fluid Level Warning Light

This warning light indicates that little washer fluid remains. Add fluid (page 8-26).

▼Automatic Transaxle Warning Light

AT

This warning light stays on for a few seconds when the ignition is switched ON.
The light illuminates when the transaxle has a problem.

CAUTION

If the automatic transaxle warning light illuminates, the transaxle has an electrical problem. Continuing to drive your Mazda in this condition could cause damage to your transaxle. Consult an Authorized Mazda Dealer as soon as possible.

▼AWD Warning Light (AWD)

4WD

This warning light stays on for a few seconds when the ignition is switched ON.
Thereafter, the warning light will illuminate or flash under the following conditions:

- Illuminates when there is an abnormality with the AWD system.
- Flashes when the differential oil temperature is abnormally high.
- Flashes when there are continually large differences between front and rear wheel rotation, such as when trying to pull away from an icy surface, or when trying to extricate the vehicle from mud, sand or similar conditions.

If the AWD warning light illuminates:

If the AWD warning light illuminates, contact an Authorized Mazda Dealer.

If the AWD warning light flashes:

Park the vehicle in a safe place. After a few moments, if the warning light stops flashing, you can resume driving. If the light does not stop flashing, contact an Authorized Mazda Dealer.

WARNING

Never spin a wheel that is off the ground:

Spinning a wheel that is off the ground as a result of the vehicle being stuck or in a ditch is dangerous. The drive assembly could be seriously damaged which could lead to an accident or could even lead to overheating, oil leakage, and a fire.

▼Tire Pressure Monitoring System (TPMS) Warning Light*

This warning light illuminates for a few seconds when the ignition is switched ON.

Thereafter, the warning light illuminates and a beep is heard when tire pressure is too low in one or more tires, and flashes when there is a system malfunction.

*Some models.

WARNING

If the tire pressure monitoring system warning light illuminates or flashes, or the tire pressure warning beep sound is heard, decrease vehicle speed immediately and avoid sudden maneuvering and braking:

If the tire pressure monitoring system warning light illuminates or flashes, or the tire pressure warning beep sound is heard, it is dangerous to drive the vehicle at high speeds, or perform sudden maneuvering or braking. Vehicle drivability could worsen and result in an accident.
To determine if you have a slow leak or a flat, pull over to a safe position where you can check the visual condition of the tire and determine if you have enough air to proceed to a place where air may be added and the system monitored again by an Authorized Mazda Dealer or a tire repair station.

Do not ignore the TPMS Warning Light:

Ignoring the TPMS warning light is dangerous, even if you know why it is illuminated. Have the problem taken care of as soon as possible before it develops into a more serious situation that could lead to tire failure and a dangerous accident.

Warning light illuminates/Warning beep sounds

When the warning light illuminates, and the warning beep sound is heard (about 3 seconds), tire pressure is too low in one or more tires.

Adjust the tire pressure to the correct tire pressure. Refer to the specification charts (page 10-6).

CAUTION

When replacing/repairing the tires or wheels or both, have the work done by an Authorized Mazda Dealer, or the tire pressure sensors may be damaged.

NOTE

- *Perform tire pressure adjustment when the tires are cold. Tire pressure will vary according to the tire temperature, therefore let the vehicle stand for 1 hour or only drive it 1.6 km (1 mile) or less before adjusting the tire pressures. When pressure is adjusted on hot tires to the cold inflation pressure, the TPMS warning light/beep may turn on after the tires cool and pressure drops below specification.*
  Also, an illuminated TPMS warning light, resulting from the tire air pressure dropping due to cold ambient temperature, may turn off if the ambient temperature rises. In this case, it will also be necessary to adjust the tire air pressures. If the TPMS warning light illuminates due to a drop in tire air pressure, make sure to check and adjust the tire air pressures.
- *After adjusting the tire air pressures, it may require some time for the TPMS warning light to turn off. If the TPMS warning light remains illuminated, drive the vehicle at a speed of at least 25 km/h (16 mph) for 10 minutes, and then verify that it turns off.*
- *Tires lose air naturally over time and the TPMS cannot tell if the tires are getting too soft over time or you have a flat. However, when you find one low tire in a set of four- that is an indication of trouble; you should have someone drive the vehicle slowly forward so you can inspect any low tire for cuts and any metal objects sticking through tread or sidewall. Put a few drops of water in the valve stem to see if it bubbles indicating a bad valve. Leaks need to be addressed by more than simply refilling the trouble tire as leaks are dangerous - take it to an Authorized Mazda Dealer which has all the equipment to fix tires, TPMS systems and order the best replacement tire for your vehicle.*

If the warning light illuminates again even after the tire pressures are adjusted, there may be a tire puncture. Replace the punctured tire with the temporary spare tire (page 7-8).

NOTE

A tire pressure sensor is not installed to the temporary spare tire. The warning light will flash continuously while the temporary spare tire is being used.

Warning light flashes

When the warning light flashes, there may be a system malfunction. Consult an Authorized Mazda Dealer.

▼KEY Warning Light (Red)/KEY Indicator Light (Green) (with Advanced Key)

This indicator has two colors.

KEY Warning Light (Red)

When illuminated

- When the ignition is switched ON, it illuminates momentarily and then goes out.
- If any malfunction occurs in the advanced keyless system, it illuminates continuously.

WARNING

Do not drive the vehicle with the KEY warning light illuminated:

If the KEY warning light remains illuminated, do not continue to drive using the advanced key system. Park the vehicle in a safe place and use the auxiliary key to continue driving the vehicle. Have the vehicle inspected at an Authorized Mazda Dealer as soon as possible.

When flashing

- Under the following conditions, the KEY warning light (red) flashes to inform the driver that the start knob will not rotate to the ACC position even if it is pushed in from the OFF position.
  - The advanced key battery is dead.
  - The advanced key is not within operational range.
  - The advanced key is placed in areas where it is difficult for the system to detect the signal (page 3-7).
  - A key from another manufacturer similar to the advanced key is in the operational range.
- Under the following conditions, the KEY warning light (red) will flash continuously when the start knob has not been returned to the OFF position to notify the driver that the advanced key has been removed from the vehicle. It will stop flashing when the advanced key is back inside the vehicle.
  - The start knob has not been returned to the OFF position, the driver's door is open, and the advanced key is removed from the vehicle.
  - The start knob has not been returned to the OFF position and all the doors are closed after removing the advanced key from the vehicle.

NOTE

The flashing KEY warning light (red) and the beep sound operate simultaneously (page 3-20).

KEY Indicator Light (Green)

When illuminated

When the start knob is pushed in from the OFF position, the system confirms that the correct advanced key is inside the vehicle, the KEY indicator light (green) illuminates, and the start knob can be turned to the ACC position (page 3-10).

When flashing

When the advanced key battery power is low, the KEY indicator light flashes for 30 seconds after the start knob is turned from the ON position to the ACC or OFF position. Replace with a new battery before the advanced key becomes unusable (page 3-7).

NOTE
The advanced key can be set so that the KEY indicator light (green) does not flash even if the battery power is low.
Refer to Personalization Features on page 10-8.

▼Security Indicator Light

This indicator light starts flashing every 2 seconds when the ignition is switched from ON to ACC and the immobilizer system is armed.

The light stops flashing when the ignition is switched ON with the correct ignition key.
At this time, the immobilizer system is disarmed and the light illuminates for about 3 seconds and then turns off.

If the engine does not start with the correct ignition key, and the security indicator light keeps illuminating or flashing, the system may have a malfunction. Consult an Authorized Mazda Dealer.

▼Headlight High-Beam Indicator Light

This light indicates one of two things:
- The high-beam headlights are on.
- The turn signal lever is in the flash-to-pass position.

▼Shift Position Indicator Light

This indicates the selected shift position when the ignition is switched ON.

Gear position indicator

Gear position indicator

When the shift lever is in the D or M position, the numeral for the selected gear displays.

▼TCS/DSC/RSC Indicator Light

This indicator light stays on for a few seconds when the ignition is switched ON. If the TCS or DSC/RSC is operating, the indicator light flashes.

If the light stays on, the TCS, DSC/RSC or the brake assist system may have a malfunction and they may not operate correctly. Take your vehicle to an Authorized Mazda Dealer.

NOTE

- *In addition to the indicator light flashing, a slight lugging sound will come from the engine. This indicates that the TCS is operating properly.*
- *On slippery surfaces, such as fresh snow, it will be impossible to achieve high rpm when the TCS is on.*

▼TCS OFF Indicator Light

This indicator light stays on for a few seconds when the ignition is switched ON.
It also illuminates when the TCS OFF switch is pressed and TCS is switched off. Refer to TCS OFF Switch on page 5-25.
If the light remains illuminated and the TCS is not switched off, take your vehicle to an Authorized Mazda Dealer. The dynamic stability control may have a malfunction.

NOTE

If the TCS/DSC indicator light and the TCS OFF indicator light remain illuminated even after switching the ignition from ON to OFF, and back to ON, attempt the procedure again. If this still does not resolve the issue, consult an Authorized Mazda Dealer.

▼Cruise Main Indicator Light (Amber)/Cruise Set Indicator Light (Green)

The indicator light has two colors.

Cruise Main Indicator Light (Amber)

The indicator light illuminates amber when the ON switch is pressed and the cruise control system is activated.

Cruise Set Indicator Light (Green)

The indicator light illuminates green when a cruising speed has been set.

▼BSM OFF Indicator Light*

This indicator light illuminates for a few seconds when the ignition is switched ON.

The BSM OFF indicator light illuminates when the BSM system is turned off by pressing the BSM OFF switch.
The indicator light flashes if the BSM system has a malfunction. Consult an Authorized Mazda Dealer.

NOTE
If the vehicle is driven on a road with less traffic and few vehicles that the radar sensors can detect, the system may pause (The BSM OFF indicator light in the instrument panel flashes). However, it does not indicate a malfunction.

▼Lights-On Indicator Light

This indicator light illuminates when the exterior lights and dashboard illumination are on.

▼Turn Signal/Hazard Warning Indicator Lights

When operating the turn signal lights, the left or right turn signal indicator light flashes to indicate which turn signal light is operating (page 5-71).

When operating the hazard warning lights, both turn signal indicator lights flash (page 5-80).

NOTE
If an indicator light remains illuminated (does not flash) or if it flashes abnormally, one of the turn signal bulbs may be burned out.

*Some models.

Beep Sounds

▼Air Bag/Front Seat Belt Pretensioner System Warning Beep

If a malfunction is detected in the air bag/front seat belt pretensioner systems and the warning light, a warning beep sound will be heard for about 5 seconds every minute.

The air bag and seat belt pretensioner system warning beep sound will continue to be heard for approximately 35 minutes. Have your vehicle inspected at an Authorized Mazda Dealer as soon as possible.

⚠ WARNING

Do not drive the vehicle with the air bag/front seat belt pretensioner system warning beep sounding:

Driving the vehicle with the air bag/front seat belt pretensioner system warning beep sounding is dangerous. In a collision, the air bags and the front seat belt pretensioner system will not deploy and this could result in death or serious injury.
Contact an Authorized Mazda Dealer to have the vehicle inspected as soon as possible.

▼Seat Belt Warning Beep

If the driver's seat belt is not fastened when the ignition is switched ON, a beep sound will be heard for about 6 seconds. If the driver or the front passenger's seat belt is not fastened and the vehicle is driven at a speed faster than about 20 km/h (12 mph), a beep sound will be heard again for a specified period of time. Refer to Seat Belt Reminder on page 2-34.

▼Ignition Key Reminder

If the ignition is switched off or the ignition is switched to ACC with the key inserted, a continuous beep sound will be heard when the driver's door is opened.

▼Lights-On Reminder*

If lights are on and the ignition is switched to ACC or the ignition is switched off, or the key is removed from the ignition switch/key slot, a continuous beep sound will be heard when the driver's door is opened.

NOTE

- ***(With advanced key)***
  When the advanced keyless function is used and the ignition is switched to ACC, the "Ignition Not Switched Off (STOP) Warning Beep" (page 3-18) overrides the lights-on reminder.
- *When the ignition is switched to ACC or the ignition is switched off, the "Ignition Key Reminder" (page 5-3) overrides the lights-on reminder.*

*Some models.

▼Parking Brake Reminder

If the parking brake has not been completely released and the vehicle is driven at about 5 km/h (3 mph) or faster, a continuous beep sound will be heard to notify the driver that the parking brake has not been released.

▼Tire Inflation Pressure Warning Beep*

The warning beep sound will be heard for about 3 seconds when there is any abnormality in tire inflation pressures (page 5-28).

▼Advanced Keyless Warning (with Advanced Key)

Warning indicators for the advanced key, such as “the advanced key removed from vehicle warning”, use a beep sound and warning/indicator lights in the instrument cluster.
Refer to Warning and Beep Sounds on page 3-18.

▼Blind Spot Monitoring System Warning Beep*

The warning beep operates when the turn signal lever is operated to the side where the BSM warning light is illuminated.

NOTE
The system can be personalized so that the BSM warning beep does not operate. Consult an Authorized Mazda Dealer.

*Some models.

Lighting Control

▼Headlights

Turn the headlight switch to turn the headlights, other exterior lights and dashboard illumination on or off.

NOTE

- *To prevent discharging the battery, do not leave the lights on while the engine is off unless safety requires them.*
- *If the light switch is left on, the lights will automatically switch off (if equipped) approximately 30 seconds after switching the ignition to ACC or switching the ignition off. The time setting can be changed. Refer to Personalization Features on page 10-8.*

Without AUTO position

Type A

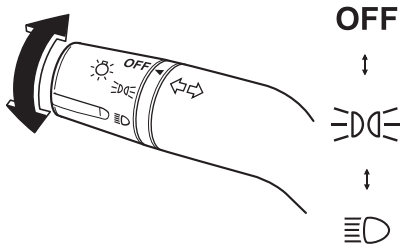

Type B

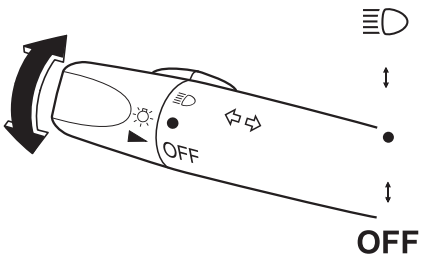

Switch Position	Type A	OFF		
	Type B	OFF	●	
Headlights		Off	Off	On
Taillights Parking lights License lights Side-marker lights Dashboard illumination		Off	On	On

With AUTO position

Type A

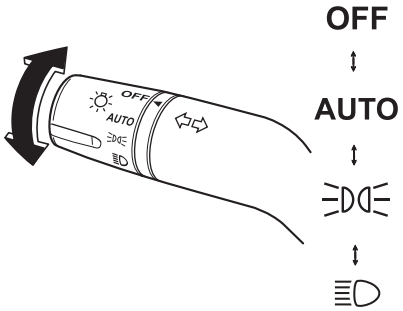

Type B

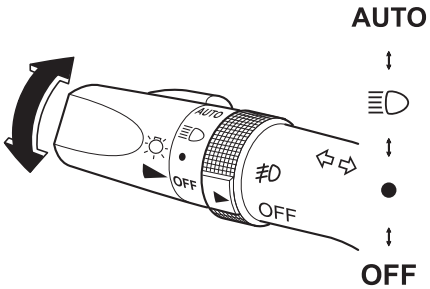

Switch Position	Type A	OFF	AUTO	≡D ◯≡	≡◯	—
	Type B	OFF	—	●		AUTO
Headlights		Off	Auto	Off	On	Auto
Taillights Parking lights License lights Side-marker lights Dashboard illumination		Off		On	On	

AUTO (Auto-light control)

When the headlight switch is in the AUTO position and the ignition is switched ON, the light sensor senses the surrounding lightness or darkness and automatically turns the headlights, other exterior lights and dashboard illumination on or off (see chart above).

⚠ CAUTION

- *Do not shade the light sensor by adhering a sticker or a label on the windshield. Otherwise the light sensor will not operate correctly.*

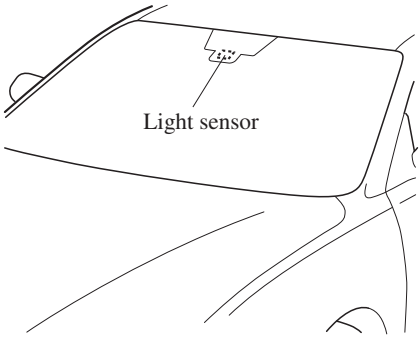

- *The light sensor also works as a rain sensor for the auto-wiper control. Keep hands and scrapers clear of the windshield when the wiper lever is in the AUTO position and the ignition is switched ON as fingers could be pinched or the wipers and wiper blades damaged when the wipers activate automatically. If you are going to clean the windshield, be sure the wipers are turned off completely — this is particularly important when clearing ice and snow — when it is particularly tempting to leave the engine running.*

NOTE

- *The headlights, other exterior lights and dashboard illumination may not turn off immediately even if the surrounding area becomes well-lit because the light sensor determines that it is nighttime if the surrounding area is continuously dark for several minutes such as inside long tunnels, traffic jams inside tunnels, or in indoor parking lots.*
  In this case, the light turns off if the light switch is turned to the OFF position.
- *The dashboard illumination can be adjusted by rotating the knob in the instrument cluster. Also, the day/night mode can be changed by pressing the knob. To adjust the brightness of the dashboard illumination: Refer to Dashboard Illumination on page 5-48.*
- *The sensitivity of the AUTO lights may be changed by an Authorized Mazda Dealer. Refer to Personalization Features on page 10-8.*

Xenon fusion headlight bulbs*

The low-beam bulbs of the headlights have xenon fusion bulbs that produce a bright white beam over a wide area.

⚠ WARNING

Do not replace the xenon fusion bulbs yourself

Replacing the xenon fusion bulbs yourself is dangerous. Because the xenon fusion bulbs require high voltage, you could receive an electric shock if the bulbs are handled incorrectly. Consult an Authorized Mazda Dealer when the replacement is necessary.

NOTE

If the headlights flicker, or the brightness weakens, the bulb-life may be depleted and a replacement is necessary. Consult an Authorized Mazda Dealer.

▼Lights-On Reminder*

If lights are on and the ignition is switched to ACC or the ignition is switched off, or the key is removed from the ignition switch/key slot, a continuous beep sound will be heard when the driver's door is opened.

NOTE

- ***(With advanced key)***
  When the advanced keyless function is used and the ignition is switched to ACC, the "Ignition Not Switched Off (STOP) Warning Beep" (page 3-18) overrides the lights-on reminder.
- *When the ignition is switched to ACC or the ignition is switched off, the "Ignition Key Reminder" (page 5-3) overrides the lights-on reminder.*

▼Headlight High-Low Beam

Press the lever forward to turn on the high beams.
Pull the lever back to its original position for the low beams.

*Some models.

Type A

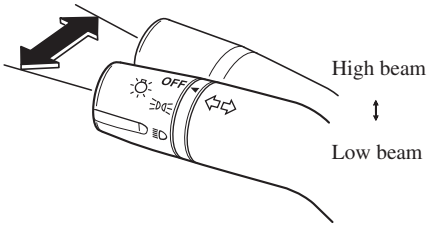

Type B

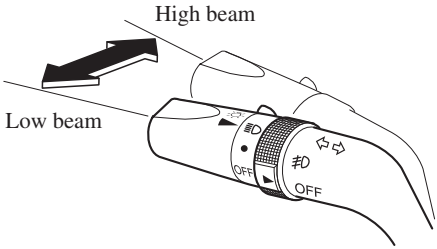

▼Flashing the Headlights

To flash the headlights, pull the lever fully towards you (the headlight switch does not need to be on). The lever will return to the normal position when released.

Type A

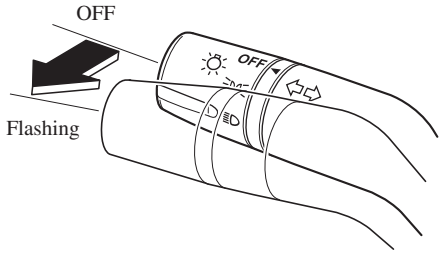

Type B

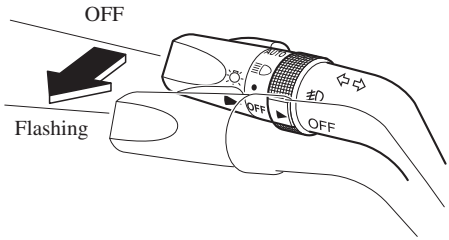

▼Headlight Leveling *

The number of passengers and weight of cargo in the luggage compartment change the angle of the headlights.
The headlight leveling switch is used to adjust the angle of the headlights manually.

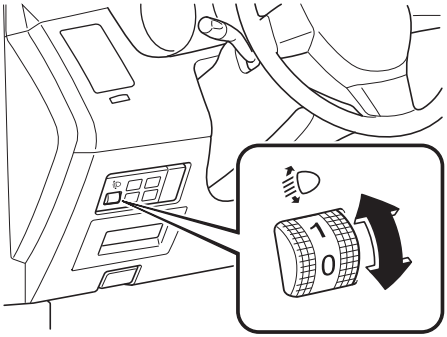

Select the proper headlight angle from the following chart.

Front seat		Rear seat		Load	Switch Position
Driver	Passenger	Second-row	Third-row		
×	—	—	—	—	0
×	×	—	—	—	0
×	×	—	×	—	1
×	×	×	×	—	1
×	×	×	×	×	2
×	—	—	—	×	3

×: Yes
—: No

▼Daytime Running Lights *

Some countries require moving vehicles to have their lights on (daytime running lights) during the daytime.

Daytime running lights turn on automatically when the ignition is switched ON.
They turn off when the parking brake is operated.

NOTE
(Except Canada)
The daytime running lights can be deactivated. Refer to Personalization Features on page 10-8.

*Some models.

Turn and Lane-Change Signals

Turn Signals

Move the signal lever down (for a left turn) or up (for a right turn) to the stop position. The signal will self-cancel after the turn is completed.

If the indicator light continues to flash after a turn, manually return the lever to its original position.

(Type A)

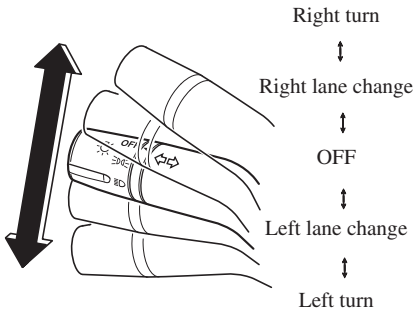

(Type B)

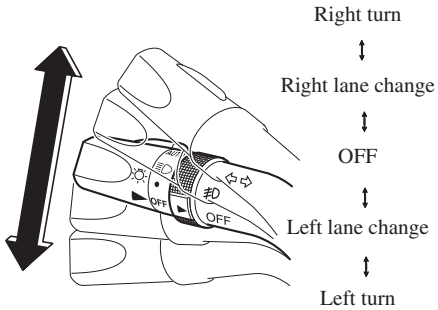

Green indicators on the dashboard show which signal is working.

Lane-change signals

Move the lever slightly toward the direction of the change —until the indicator flashes— and hold it there. It will return to the off position when released.

NOTE

If an indicator light stays on without flashing or if it flashes abnormally, one of the turn signal bulbs may be burned out.

Fog Lights *

Use this switch to turn on the fog lights. The fog lights will improve visibility at night and during foggy conditions.

To turn the fog lights on, rotate the fog light switch to the position.
The headlight switch must be in the position before turning on the fog lights.

Type A

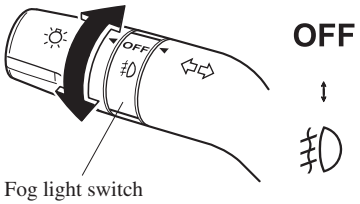

Type B

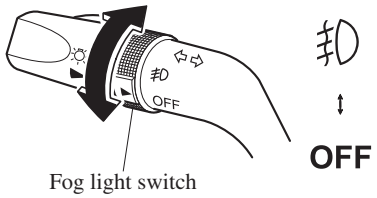

To turn them off, rotate the fog light switch to the OFF position or turn the headlight switch to the (Type A)/● (Type B) position.

NOTE

- *The fog lights will turn off when the headlights are set at high beam.*
- ***(With auto-light control)***
  If the fog light switch is in the ON position and the headlight switch is in the AUTO position, the fog lights will turn on when the headlights, the exterior lights and dashboard illumination turn automatically.

*Some models.

Windshield Wipers and Washer

The ignition must be switched ON.

⚠ WARNING

Use only windshield washer fluid or plain water in the reservoir:

Using radiator antifreeze as washer fluid is dangerous. If sprayed on the windshield, it will dirty the windshield, affect your visibility, and could result in an accident.

Only use windshield washer fluid mixed with anti-freeze protection in freezing weather conditions:

Using windshield washer fluid without anti-freeze protection in freezing weather conditions is dangerous as it could freeze on the windshield and block your vision which could cause an accident.
In addition, make sure the windshield is sufficiently warmed using the defroster before spraying the washer fluid.

NOTE

Because heavy ice and snow can jam the wiper blades, the wiper motor is protected from motor breakdown, overheating and possible fire by a circuit breaker. This mechanism will automatically stop operation of the blades, but only for about 5 minutes.
If this happens, turn off the wiper switch and park off the right-of-way, and remove the snow and ice.
After 5 minutes, turn on the switch and the blades should operate normally. If they do not resume functioning, consult an Authorized Mazda Dealer as soon as possible. Drive to the side of the road and park off the right-of-way. Wait until the weather clears before trying to drive with the wipers inoperative.

▼Windshield Wipers

Turn the wipers on by pressing the lever up or down.

With INT position

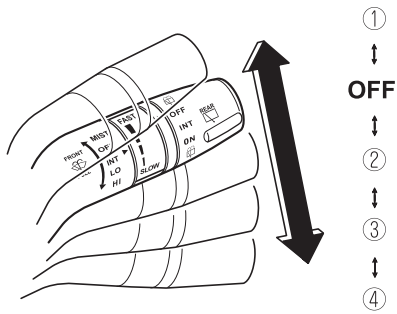

Switch Position			Wiper operation
No.	Type A	Type B	
①	MIST	MIST	Single wipe cycle (mist)
②	INT	INT	Intermittent
③	LO	1	Low speed
④	HI	2	High speed

With AUTO position

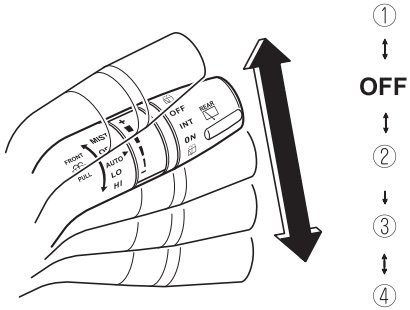

Switch Position			Wiper operation
No.	Type A	Type B	
①	MIST	MIST	Single wipe cycle (mist)
②	AUTO	AUTO	Auto control
③	LO	1	Low speed
④	HI	2	High speed

Variable-speed intermittent wipers

Set the lever to the intermittent position and choose the interval timing by rotating the ring.

Type A

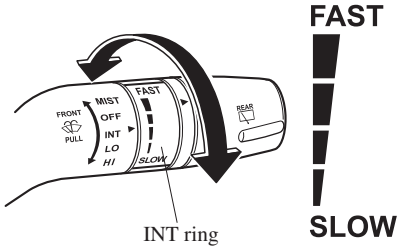

Type B

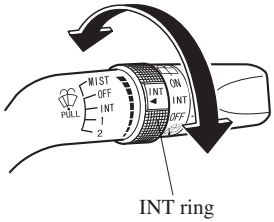

AUTO (Auto-wiper control)

When the wiper lever is in the AUTO position, the rain sensor senses the amount of rainfall on the windshield and turns the wipers on or off automatically (off—intermittent—low speed—high speed).

The sensitivity of the rain sensor can be adjusted by turning the switch on the wiper lever.
From the center position (normal), rotate the switch downward for higher sensitivity (faster response) or rotate it upward for less sensitivity (slower response).

Type A

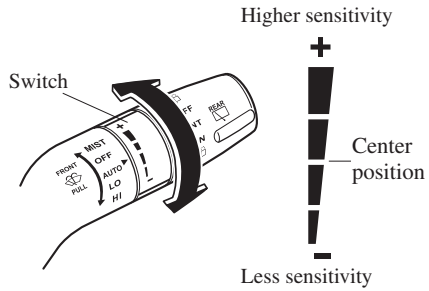

Type B

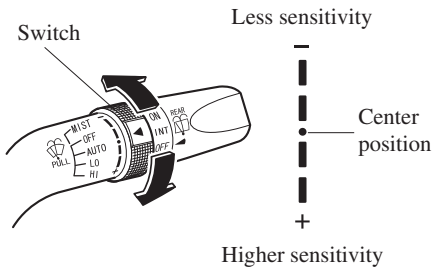

CAUTION

➢ *Do not shade the rain sensor by adhering a sticker or a label on the windshield. Otherwise the rain sensor will not operate correctly.*

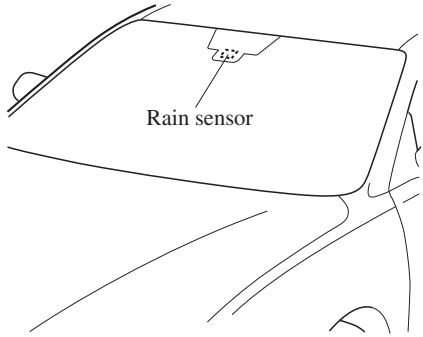

- *When the wiper lever is in the AUTO position and the ignition is switched ON, the wipers may move automatically in the following cases:*
  - *If the windshield above the rain sensor is touched or wiped with a cloth.*
  - *If the windshield is struck with a hand or other object from either outside or inside the vehicle.*

  Keep hands and scrapers clear of the windshield when the wiper lever is in the AUTO position and the ignition is switched ON as fingers could be pinched or the wipers and wiper blades damaged when the wipers activate automatically.
  If you are going to clean the windshield, be sure the wipers are turned off completely—this is particularly important when clearing ice and snow—when it is most likely that the engine is left running.

NOTE

- *Switching the auto-wiper lever from the OFF to the AUTO position while driving at a vehicle speed of 4 km/h (2 mph) or higher (or after driving the vehicle) activates the windshield wipers once, after which they operate according to the rainfall amount.*
- *The auto-wiper control may not operate when the rain sensor temperature is about –10 °C (14 °F) or lower, or about 85 °C (185 °F) or higher.*
- *If the windshield is coated with water repellent, the rain sensor may not be able to sense the amount of rainfall correctly and auto-wiper control may not operate properly.*
- *If dirt or foreign matter (Such as ice or matter containing salt water) adheres to the windshield above the rain sensor or if the windshield is iced, it could cause the wipers to move automatically. However, if the wipers cannot remove this ice, dirt or foreign matter, the auto-wiper control will stop operation. In this case, set the wiper lever to the low speed position or high speed position for manual operation, or remove the ice, dirt or foreign matter by hand to restore the auto-wiper operation.*
- *If the auto-wiper lever is left in the AUTO position, the wipers could operate automatically from the effect of strong light sources, electromagnetic waves, or infrared light because the rain sensor uses an optical sensor. It is recommended that the auto-wiper lever be switched to the OFF position other than when driving the vehicle under rainy conditions.*

▼Windshield Washer

Pull the lever toward you and hold it to spray washer fluid.

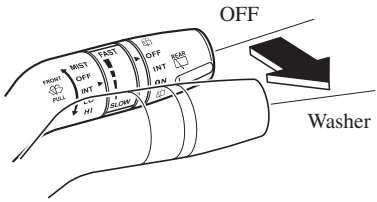

NOTE
With the wiper lever in the OFF or intermittent position/AUTO position, the wipers will operate continuously until the lever is released.

If the washer does not work, inspect the fluid level (page 8-26). If it's normal, consult an Authorized Mazda Dealer.

Rear Window Wiper and Washer

The ignition must be switched ON.

▼Rear Window Wiper

Type A

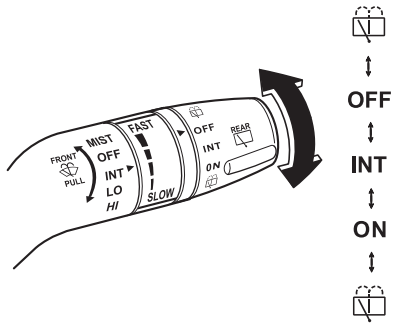

Type B

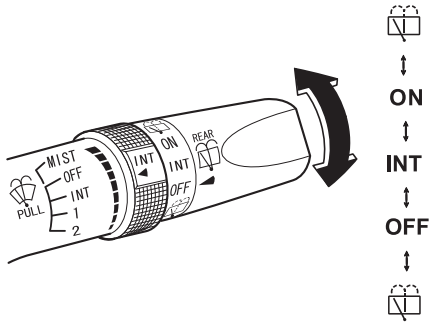

Turn the wiper on by turning the rear wiper/washer switch.
ON — Normal
INT — Intermittent

▼Rear Window Washer

To spray washer fluid, turn the rear wiper/washer switch to the position. After the switch is released, the washer will stop.
If the washer does not work, inspect the fluid level (page 8-26). If it's normal and the washer still does not work, consult an Authorized Mazda Dealer.

Rear Window Defroster

The rear window defroster clears frost, fog, and thin ice from the rear window.

The ignition must be switched ON.

Press the switch to turn on the rear window defroster. The rear window defroster operates for about 15 minutes and turns off automatically.
The indicator light illuminates during operation.
The defroster operation can be confirmed by the indicator in the display.

To turn off the rear window defroster before the 15 minutes has elapsed, press the switch again.

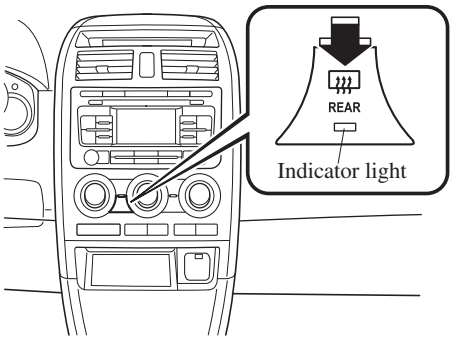

⚠ CAUTION

Do not use sharp instruments or window cleaners with abrasives to clean the inside of the rear window surface. They may damage the defroster grid inside the window.

NOTE
This defroster is not designed for melting snow. If there is an accumulation of snow on the rear window, remove it before using the defroster.

▼Mirror Defroster *

To turn on the mirror defrosters, switch the ignition ON and press the rear window defroster switch (page 5-78).

Horn

To sound the horn, press the mark on the steering wheel.

* Some models.

Hazard Warning Flasher

The hazard warning lights should always be used when you stop on or near a roadway in an emergency.

The hazard warning lights warn other drivers that your vehicle is a traffic hazard and that they must take extreme caution when near it.

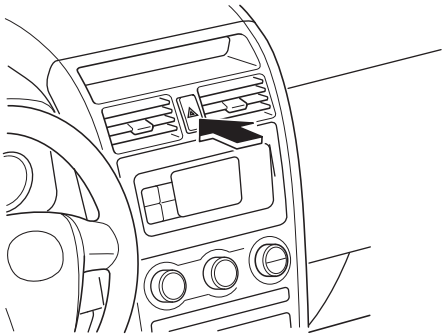

Depress the hazard warning flasher and all the turn signals will flash.

NOTE

- *The turn signals do not work when the hazard warning lights are on.*
- *Check local regulations about the use of hazard warning lights while the vehicle is being towed to verify that it is not in violation of the law.*

HomeLink Wireless Control System*

There are two types of HomeLink Wireless Control systems; type A and B.
Check the indication on the backside of the rearview mirror and the description corresponding to your vehicle.

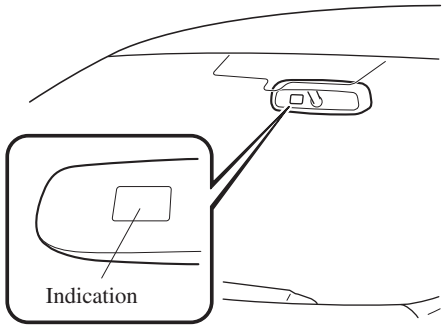

Indication

Type A	Type B
FCC ID: NZLMOBHL4 IC: 4112A-MOBHL4 COFETEL: RLVCEMO11-0807 MODEL: MOBHL4	FCC ID: NZLOBIHL3 IC: 4112A-OBIHL3 MODEL: OBIHL3

▼Type A

NOTE

HomeLink and HomeLink house are registered trademarks of Johnson Controls.

The HomeLink system replaces up to 3 hand-held transmitters with a single built-in component in the auto-dimming mirror. Pressing the HomeLink button on the auto-dimming mirror activates garage doors, gates and other devices surrounding your home.

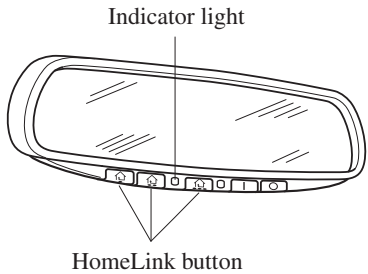

*Some models.

⚠ WARNING

Do not use the HomeLink system with any garage door opener that lacks the safety stop and reverse feature:

Using the HomeLink system with any garage door opener that lacks the safety stop and reverse feature as required by federal safety standards is dangerous. (This includes garage doors manufactured before April 1, 1982.)
Using these garage door openers can increase the risk of serious injury or death. For further information, contact HomeLink at 1-800-355-3515 or www.homelink.com or your Authorized Mazda Dealer.

Always check the areas surrounding garage doors and gates for people or obstructions before programming or during operation of the HomeLink system:

Programming or operating the HomeLink system without verifying the safety of areas surrounding garage doors and gates is dangerous and could result in an unexpected accident and serious injury if someone were to be hit.

⚠ CAUTION

HomeLink has been tested and complies with FCC and Industry Canada rules. Changes or modifications not expressly approved by the party responsible for compliance could void the user's authority to operate the device.

NOTE

FCC ID: NZLMOBHL4
CANADA: 4112A-MOBHL4
This device complies with part 15 of the FCC Rules. Operation is subject to the following two conditions:
1- This device may not cause harmful interference, and
2- This device must accept any interference received, including interference that may cause undesired operation.

NOTE

The programming will not be erased even if the battery is disconnected.

Pre-programming the HomeLink System

NOTE

It is recommended that a new battery be placed in the hand-held transmitter of the device being programmed to HomeLink for quicker training and accurate transmission of the radio-frequency signal.

- Verify that there is a remote control transmitter available for the device you would like to program.
- Disconnect the power to the device.

Programming the HomeLink System

⚠ CAUTION

When programming a garage door opener or a gate, disconnect the power to these devices before performing programming, as continuous operation of the devices could damage the motor.

The HomeLink system provides 3 buttons which can be individually selected and programmed using the transmitters for current, on-market devices as follows:

1. Position the end of your hand-held transmitter 2.5—7.5 cm (1—3 inches) away from the HomeLink button you wish to program while keeping the indicator light in view.
2. Simultaneously press and hold both the chosen HomeLink and hand-held transmitter buttons. **Do not release the buttons until step 3 has been completed.**

NOTE
Some gate operators and garage door openers may require you to replace this Programming Step 2 with procedures noted in the "Gate Operator/Canadian Programming" section.

3. After the HomeLink indicator light changes from a slow to a rapidly blinking light, release both the HomeLink and hand-held transmitter buttons.

NOTE
If the HomeLink indicator light does not change to a rapidly blinking light, contact HomeLink at ***www.homelink.com*** *or call* ***1-800-355-3515*** *for assistance.*

4. Firmly press and hold the programmed HomeLink button for five seconds, and then release it. Perform this operation two times to activate the door. If the door does not activate, press and hold the just-trained HomeLink button and observe the indicator light.

If the indicator light **stays on constantly, programming is complete** and your device should activate when the HomeLink button is pressed and released.

NOTE
To program the remaining two HomeLink buttons, begin with "Programming"— ***step 1.***

If the indicator light blinks **rapidly for two seconds and then turns to a constant light, continue with "Programming" steps 5—7** to complete the programming of a rolling code equipped device (most commonly a garage door opener).

5. At the garage door opener receiver (motor-head unit) in the garage, locate the "learn" or "smart" button. This can usually be found where the hanging antenna wire is attached to the motor-head unit.
6. Firmly press and release the "learn" or "smart" button. (The name and color of the button may vary by manufacturer.)

NOTE
There are 30 seconds in which to initiate step 7.

7. Return to the vehicle and firmly **press, hold for two seconds and release** the programmed HomeLink button. Repeat the "**press/hold/release**" sequence a second time, and, depending on the brand of the garage door opener (or other rolling code equipped device), repeat this sequence a third time to complete the programming process.

HomeLink should now activate your rolling code equipped device.

NOTE
To program the remaining two HomeLink buttons, begin with "Programming"— ***step 1.***

For questions or comments, please contact HomeLink at **www.homelink.com** or **1-800-355-3515.**

Gate operator/Canadian Programming

Canadian radio-frequency laws require transmitter signals to “time-out” (or quit) after several seconds of transmission — which may not be long enough for HomeLink to pick up the signal during programming. Similar to this Canadian law, some U.S. gate operators are designed to “time-out” in the same manner.

If you live in Canada or you are having difficulties programming a gate operator by using the “Programming” procedures (regardless of where you live), **replace “Programming HomeLink” step 2** with the following:

NOTE
If programming a garage door opener or gate operator, it is advised to unplug the device during the “cycling” process to prevent possible overheating.

Continue to press and hold the HomeLink button while you **press and release — every two seconds** (“cycle”) your hand-held transmitter until the frequency signal has successfully been accepted by HomeLink. (The indicator light will flash slowly and then rapidly.) Proceed with “Programming” step 3 to complete.

Operating the HomeLink System

Press the programmed HomeLink button to operate a programmed device. The code will continue being transmitted for a maximum of 20 seconds.

Reprogramming the HomeLink system

To program a device to HomeLink using a HomeLink button previously trained, follow these steps:

1. Press and hold the desired HomeLink button. **DO NOT** release the button.
2. The indicator light will begin to flash after 20 seconds. Without releasing the HomeLink button, proceed with “Programming” - step 1.

Erasing Programmed HomeLink Buttons

To erase the existing programming from all three operating channels, press and hold the two outside buttons (,) on the auto-dimming mirror until the HomeLink indicator light begins to flash after approximately 10 seconds.
Verify that the programming has been erased when you resell the vehicle.

▼Type B

NOTE
HomeLink and HomeLink house are registered trademarks of Johnson Controls.

The HomeLink system replaces up to 3 hand-held transmitters with a single built-in component in the auto-dimming mirror. Pressing the HomeLink button on the auto-dimming mirror activates garage doors, gates and other devices surrounding your home.

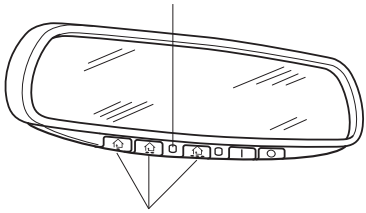

WARNING

Do not use the HomeLink system with any garage door opener that lacks the safety stop and reverse feature:

Using the HomeLink system with any garage door opener that lacks the safety stop and reverse feature as required by federal safety standards is dangerous. (This includes garage doors manufactured before April 1, 1982.)

Using these garage door openers can increase the risk of serious injury or death. For further information, contact HomeLink at 1-800-355-3515 or www.homelink.com or your Authorized Mazda Dealer.

Always check the areas surrounding garage doors and gates for people or obstructions before programming or during operation of the HomeLink system:

Programming or operating the HomeLink system without verifying the safety of areas surrounding garage doors and gates is dangerous and could result in an unexpected accident and serious injury if someone were to be hit.

CAUTION

HomeLink has been tested and complies with FCC and Industry Canada rules. Changes or modifications not expressly approved by the party responsible for compliance could void the user's authority to operate the device.

NOTE
FCC ID: NZLOBIHL3
CANADA:4112A-OBIHL3
This device complies with FCC rules part 15. Operation is subject to the following conditions:
1- This device may not cause any harmful interference and
2- This device must accept any interference that may be received including interference that may cause undesired operation.

NOTE
The programming will not be erased even if the battery is disconnected.

Pre-programming the HomeLink System

NOTE
It is recommended that a new battery be placed in the hand-held transmitter of the device being programmed to HomeLink for quicker training and accurate transmission of the radio-frequency signal.

- Verify that there is a remote control transmitter available for the device you would like to program.
- Disconnect the power to the device.

Programming the HomeLink System

⚠ CAUTION

When programming a garage door opener or a gate, disconnect the power to these devices before performing programming, as continuous operation of the devices could damage the motor.

The HomeLink system provides 3 buttons which can be individually selected and programmed using the transmitters for current, on-market devices as follows:

1. Press and hold the two outer HomeLink buttons (buttons one and three) — releasing only when the indicator light begins to flash (after 20 seconds). **Do not** hold the buttons for longer than 30 seconds and **do not repeat step 1** to program a second and/or third hand-held transmitter to the remaining two HomeLink buttons.
2. Position the end of your hand-held transmitter 2.5—7.5 cm (1—3 inches) away from the HomeLink button you wish to program while keeping the indicator light in view.
3. Simultaneously press and hold both the chosen HomeLink and hand-held transmitter buttons. **Do not release the buttons until step 4 has been completed.**

NOTE
Some gate operators and garage door openers may require you to replace this Programming Step 3 with procedures noted in the "Gate Operator/Canadian Programming" section.

4. After the HomeLink indicator light changes from a slow to a rapidly blinking light, release both the HomeLink and hand-held transmitter buttons.

NOTE
*If the HomeLink indicator light does not change to a rapidly blinking light, contact HomeLink at **www.homelink.com** or call **1-800-355-3515** for assistance.*

5. Press and hold the just-trained HomeLink button and observe the indicator light.

If the indicator light **stays on constantly, programming is complete** and your device should activate when the HomeLink button is pressed and released.

NOTE
To program the remaining two HomeLink buttons, begin with "Programming"— step 2. Do not repeat step 1.

If the indicator light blinks **rapidly for two seconds and then turns to a constant light, continue with "Programming" steps 6—8** to complete the programming of a rolling code equipped device (most commonly a garage door opener).

6. At the garage door opener receiver (motor-head unit) in the garage, locate the "learn" or "smart" button. This can usually be found where the hanging antenna wire is attached to the motor-head unit.
7. Firmly press and release the "learn" or "smart" button. (The name and color of the button may vary by manufacturer.)

NOTE
There are 30 seconds in which to initiate step 8.

8. Return to the vehicle and firmly **press, hold for two seconds and release** the programmed HomeLink button. Repeat the "**press/hold/release**" sequence a second time, and, depending on the brand of the garage door opener (or other rolling code equipped device), repeat this sequence a third time to complete the programming process.

HomeLink should now activate your rolling code equipped device.

NOTE
To program the remaining two HomeLink buttons, begin with "Programming"— step 2. Do not repeat step 1.

For questions or comments, please contact HomeLink at **www.homelink.com** or **1-800-355-3515.**

Gate operator/Canadian Programming

Canadian radio-frequency laws require transmitter signals to "time-out" (or quit) after several seconds of transmission — which may not be long enough for HomeLink to pick up the signal during programming. Similar to this Canadian law, some U.S. gate operators are designed to "time-out" in the same manner.

If you live in Canada or you are having difficulties programming a gate operator by using the "Programming" procedures (regardless of where you live), **replace "Programming HomeLink" step 3** with the following:

NOTE
If programming a garage door opener or gate operator, it is advised to unplug the device during the "cycling" process to prevent possible overheating.

Continue to press and hold the HomeLink button while you **press and release — every two seconds** ("cycle") your hand-held transmitter until the frequency signal has successfully been accepted by HomeLink. (The indicator light will flash slowly and then rapidly.) Proceed with "Programming" step 4 to complete.

Operating the HomeLink System

Press the programmed HomeLink button to operate a programmed device. The code will continue being transmitted for a maximum of 20 seconds.

Reprogramming the HomeLink system

To program a device to HomeLink using a HomeLink button previously trained, follow these steps:

1. Press and hold the desired HomeLink button. **DO NOT** release the button.
2. The indicator light will begin to flash after 20 seconds. Without releasing the HomeLink button, proceed with “Programming” - step 2.

Erasing Programmed HomeLink Buttons

To erase the existing programming from all three operating channels, press and hold the two outside buttons (,) on the auto-dimming mirror until the HomeLink indicator light begins to flash after approximately 20 seconds.
Verify that the programming has been erased when you resell the vehicle.

6 Interior Comfort

Use of various features for drive comfort, including air-conditioning and audio system.

Climate Control System 6-2
Operating Tips 6-2
Vent Operation (Front) 6-4
Fully Automatic Type 6-6
Vent Operation (Rear) 6-12
Fully Automatic Type (Rear) 6-14

Audio System 6-17
Antenna 6-17
Operating Tips for Audio System 6-17
Audio Set 6-29
Audio Control Switch Operation 6-50
AUX/USB/iPod Mode 6-52
Safety Certification 6-63

Rear Entertainment System 6-64
Rear Entertainment System* 6-64
Part Names 6-74
Before Operation 6-77
Sound Output 6-83
Rear Entertainment System Functions 6-87
DVD video, DVD audio, Video CD, Audio CD and MP3/WMA CD Playback (Disc Mode) 6-88
Auxiliary Input (AUX mode) 6-102
Language Code List 6-106
Country Code List 6-108
Error Message 6-112
Symptoms and Actions 6-114

Bluetooth® 6-116
Bluetooth®* 6-116
Bluetooth® Hands-Free 6-122
Bluetooth® Audio 6-141
Troubleshooting 6-145
Safety Certification 6-149

Rear View Monitor 6-151
Rear View Monitor* 6-151

Interior Equipment 6-162
Sunvisors 6-162
Interior Lights 6-163
Information Display 6-165
Cup Holder 6-169
Bottle Holder 6-171
Storage Compartments 6-172
Accessory Sockets 6-175
Power Outlet* 6-177

*Some models.

Operating Tips

▼Operating the Climate Control System

Operate the climate control system with the engine running.

NOTE
To prevent the battery from being discharged, do not leave the fan control dial on for a long period of time with the ignition switched ON when the engine is not running.

▼Clearing the Air Inlet

Clear all obstructions such as leaves, snow and ice from the hood and the air inlet in the cowl grille to improve the system efficiency.

▼Foggy Windows

The windows may fog up easily in humid weather. Use the climate control system to defog the windows.

To help defog the windows, operate the air conditioner to dehumidify the air.

NOTE
The air conditioner may be used along with the heater to dehumidify the air.

▼Outside/Recirculated Air Position

Use the outside air position in normal conditions. The recirculated air position should be used only when driving on dusty roads or for quick cooling of the interior.

▼Parking in Direct Sunlight

If the vehicle has been parked in direct sunlight during hot weather, open the windows to let warm air escape, then run the climate control system.

▼Not Using for a Long Period

Run the air conditioner about 10 minutes at least once a month to keep internal parts lubricated.

▼Check the Refrigerant before the Weather Gets Hot

Have the air conditioner checked before the weather gets hot. Lack of refrigerant may make the air conditioner less efficient. Consult an Authorized Mazda Dealer for refrigerant inspection.

The air conditioner is filled with HFC134a (R134a), a refrigerant that will not damage the ozone layer.
If the air conditioner is low on refrigerant or has a malfunction, consult an Authorized Mazda Dealer.

▼Replacement of the Cabin Air Filter

Your vehicle is equipped with an air filter for the air conditioner. It is necessary to change the filter periodically as indicated in scheduled maintenance (page 8-4). Consult an Authorized Mazda Dealer for replacement of the cabin air filter.

▼Sunlight/Temperature Sensor

The fully automatic air conditioner function measures inside and outside temperatures, and the intensity of direct sunlight. It then sets temperatures inside the passenger compartment accordingly.

⚠ CAUTION

Do not obstruct either sensor, otherwise the automatic air conditioner will not operate properly.

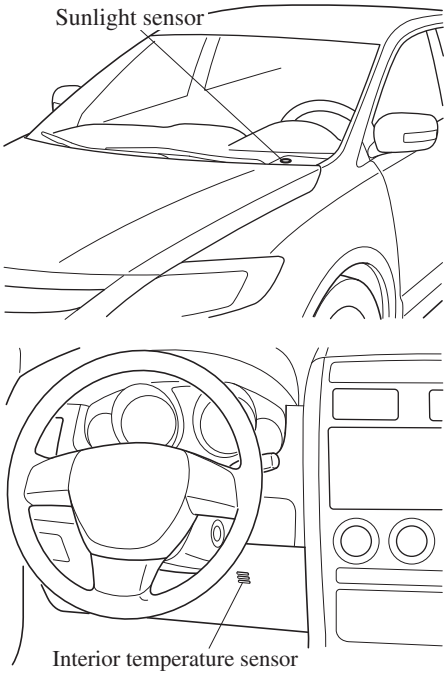

Vent Operation (Front)

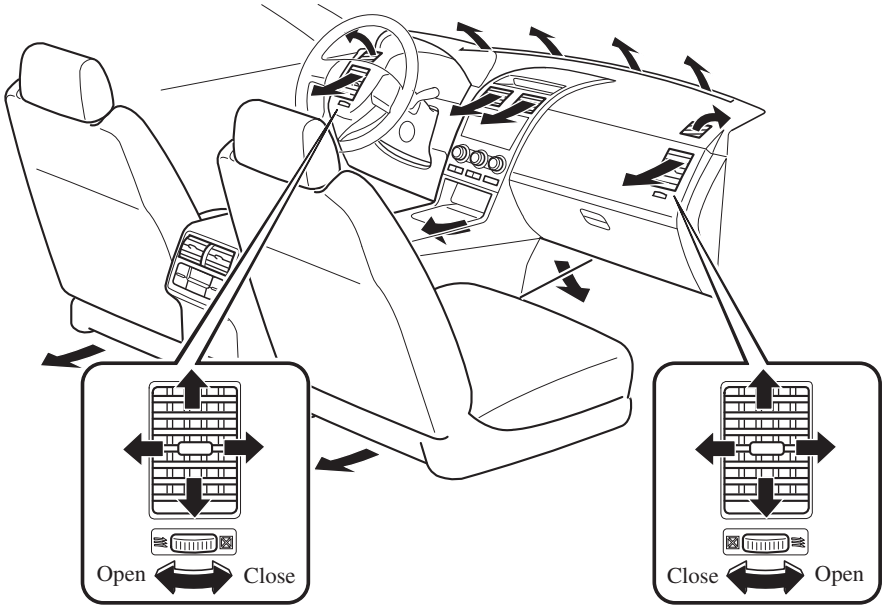

▼Adjusting the Vents

Directing airflow

You can direct air flow by moving the adjustment knob.

Opening/closing vents

The two outside vents can be opened and closed with wheel.

NOTE

When using the air conditioner, mist may come out from the vents. This is not a sign of trouble but a result of humid air being suddenly cooled.

▼Selecting the Airflow Mode

Dashboard Vents

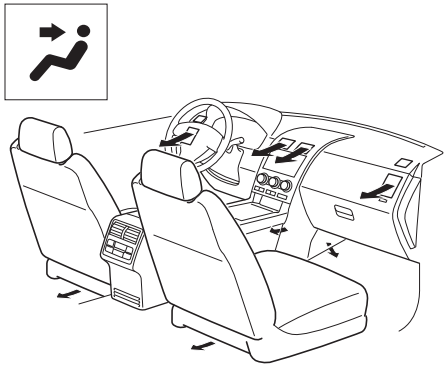

Defroster and Floor Vents

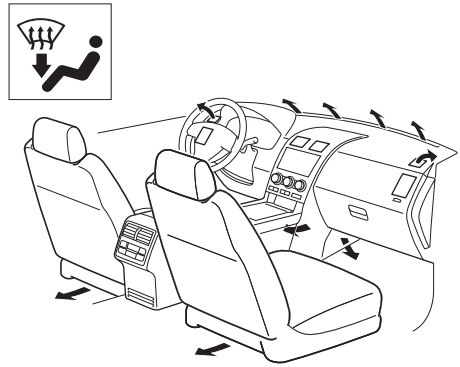

Dashboard and Floor Vents

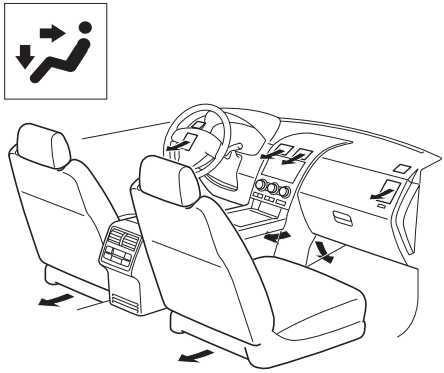

Defroster Vents

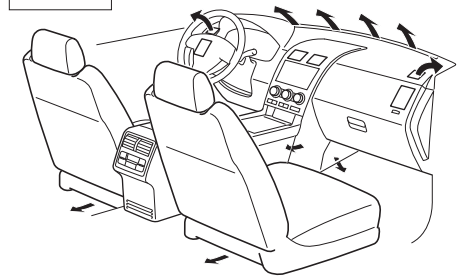

Floor Vents

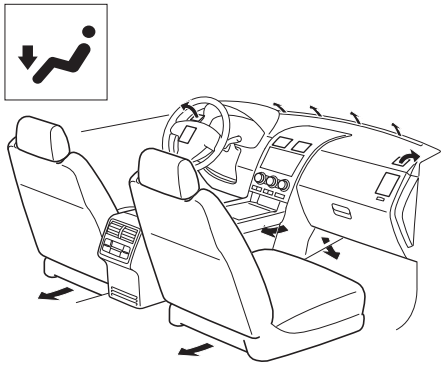

Fully Automatic Type

Climate control information is displayed on the information display.

Information display

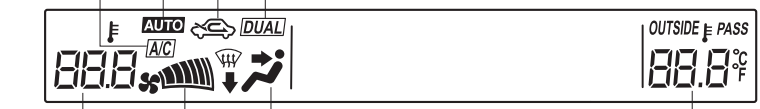

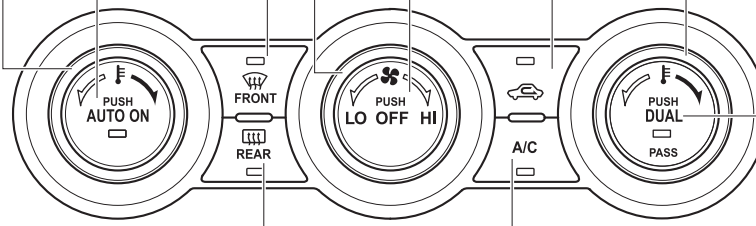

▼Control Switches

AUTO switch

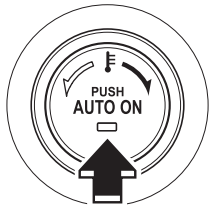

By pressing the AUTO switch the following functions will be automatically controlled in accordance with the selected set temperature:

- Airflow temperature
- Amount of airflow
- Selection of airflow mode
- Outside/Recirculated air selection
- Air conditioner operation

NOTE

AUTO switch indicator light

- *When on, it indicates AUTO operation, and the system will function automatically.*
- *If any of the following dials or switches are operated while in AUTO control, the AUTO switch indicator turns off.*
  - *Mode selector switch*
  - *Fan control dial*
  - *Windshield defroster switch*

  The functions for dials and switches other than those operated in the above continue to operate in AUTO control.

OFF switch

Pressing the OFF switch shuts off the climate control system.

Temperature control dial

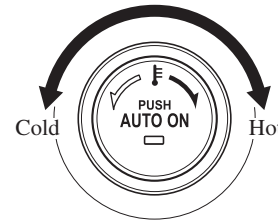

This dial controls temperature. Turn it clockwise for hot and counterclockwise for cold.

- When the DUAL switch is off:
  Turn the driver temperature control dial to control the temperature.
- When the DUAL switch is on:
  Turn the driver or front passenger temperature control dial to control the temperature.

NOTE

The system changes to the individual operation mode (DUAL switch indicator light illuminated) by turning the front passenger temperature control dial even when the DUAL switch is off, which allows individual control of the set temperature for the driver and front passenger.

Fan control dial

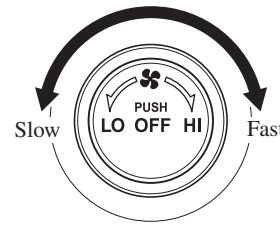

The fan has seven speeds. The selected speed will be displayed.

Mode selector switch

The desired airflow mode can be selected (page 6-5).

NOTE

- *With the airflow mode set to the position and the temperature control dial set at a medium temperature, heated air is directed to the feet and a comparably lower air temperature will flow through the central, left and right vents.*
- *To set the air vent to , press the windshield defroster switch.*
- *In the position, the air conditioner is automatically turned on and the mode is automatically selected to defrost the windshield. In the position, the mode cannot be changed to the mode.*

A/C switch

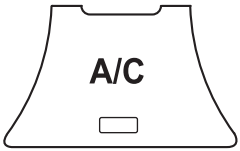

Pressing the A/C switch while the AUTO switch is turned on will turn off the air conditioning (cooling/dehumidifying functions). The air conditioning can be turned on and off by pressing the A/C switch while the fan control dial is on.

NOTE

- *The air conditioning operates when the A/C switch is pressed even if the fan is off.*
- *The air conditioner may not function when the outside temperature approaches 0 °C (32 °F). (Indicator light remains on even when system is off.)*

Air intake selector

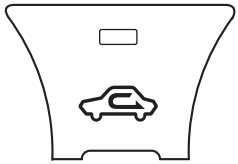

Outside or recirculated air positions can be selected. Press the switch to select outside/recirculated air positions.

Recirculated air position (indicator light illuminated)

Use this position when going through tunnels, driving in congested traffic (high engine exhaust areas) or when quick cooling is desired.

Outside air position (indicator light turned off)

Use this position for normal conditions and defogging.

WARNING

Do not use the position in cold or rainy weather:

Using the position in cold or rainy weather is dangerous as it will cause the windows to fog up. Your vision will be hampered, which could lead to a serious accident.

OUTSIDE (Ambient Temperature) switch

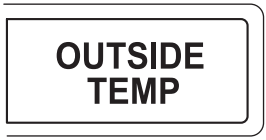

Press the OUTSIDE switch to display the ambient temperature.

NOTE

- *The displayed ambient temperature may vary from the actual ambient temperature depending on the surrounding area and vehicle conditions.*
- *Press the OUTSIDE switch for three seconds or longer to switch the display from Fahrenheit to Centigrade or vice versa.*
- *Press the OUTSIDE switch again to switch the display from ambient temperature to the temperature set for the air conditioner.*

DUAL switch

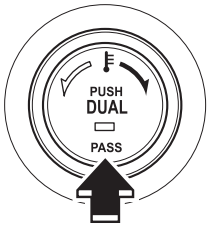

Use the DUAL switch to change the mode between the individual operation (driver and passenger) and interconnection (simultaneous) modes.

Individual operation mode (indicator light illuminated)

The set temperature can be controlled individually for the driver and front passenger.

Interconnection mode (indicator light turned off)

The set temperature for the driver and front passenger is controlled simultaneously.

NOTE

- *The set temperature for the front passenger changes to that of the driver while in the interconnected mode.*
- DUAL *is displayed on the information display while in the individual operation mode.*
- *The system changes to the interconnection mode automatically if the windshield defroster switch is pressed. The system will not change to the individual operation mode by pressing the DUAL switch or turning the front passenger temperature control dial.*

Windshield defroster switch

Press the switch to defrost the windshield and front door windows.

NOTE
In the position, the air conditioner is automatically turned on and the mode is automatically selected to defrost the windshield. In the position, the mode cannot be changed to the mode.

▼Operation of Automatic Air Conditioning

1. Press the AUTO switch. Selection of the airflow mode, air intake selector and amount of airflow will be automatically controlled.

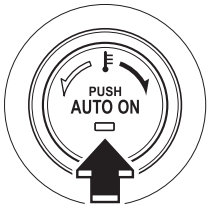

2. Use the temperature control dial to select a desired temperature.
   Press the DUAL switch or turn the front passenger temperature control dial to control the set temperature individually for the driver and front passenger.

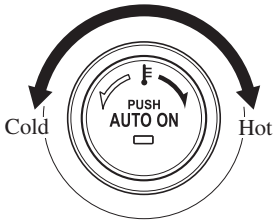

To turn off the system, press the OFF switch.

NOTE
- *Setting the temperature to the maximum high or low will not provide the desired temperature at a faster rate.*
- *When selecting heat, the system will restrict airflow until it has warmed to prevent cold air from blowing out of the vents.*

▼Windshield Defrosting and Defogging

Press the windshield defroster switch.
In this position, the position is automatically selected, and the air conditioner automatically turns on. The air conditioner will directly dehumidify the air to the front windshield and side windows (page 6-5). Airflow amount will be increased.

⚠ WARNING

Set the temperature control to the hot or warm position when defogging (position):

Using the position with the temperature control set to the cold position is dangerous as it will cause the outside of the windshield to fog up. Your vision will be hampered, which could lead to a serious accident.

NOTE

- *Press the windshield defroster switch to change the mode to the interconnection mode automatically. The system does not change to the individual operation mode by pressing the DUAL switch or turning the front passenger temperature control dial.*
- *Use the temperature control dial to increase the air flow temperature and defog the windshield more quickly.*

Vent Operation (Rear)

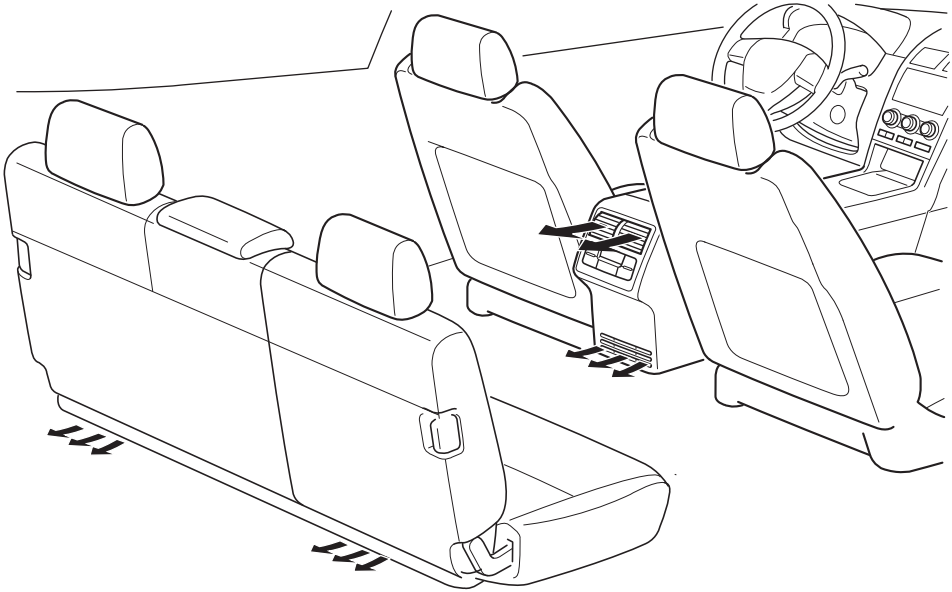

▼Adjusting the Vents

Directing airflow

You can direct air flow by moving the adjustment knob.

NOTE

When using the air conditioner, mist may come out from the vents. This is not a sign of trouble but a result of humid air being suddenly cooled.

▼Selecting the Airflow Mode

For vehicles with rear full-auto air conditioning, the airflow mode can be selected according to the purpose of use.

Instrument panel Vents

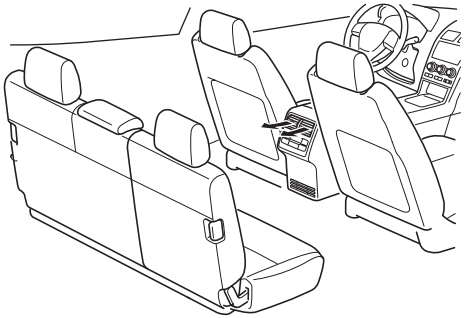

Floor Vents

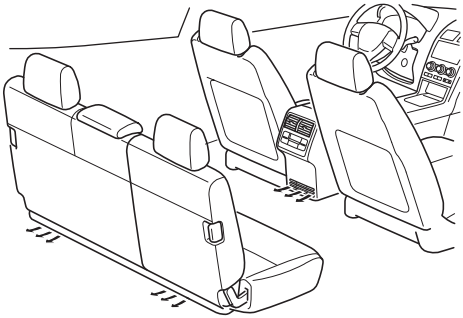

Instrument panel and Floor Vents

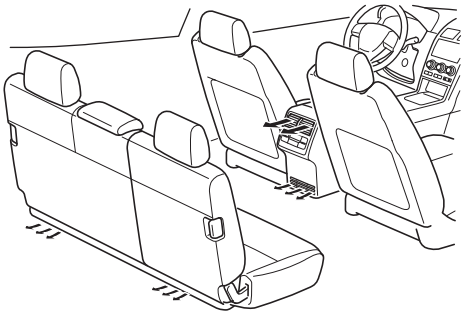

Fully Automatic Type (Rear)

Front

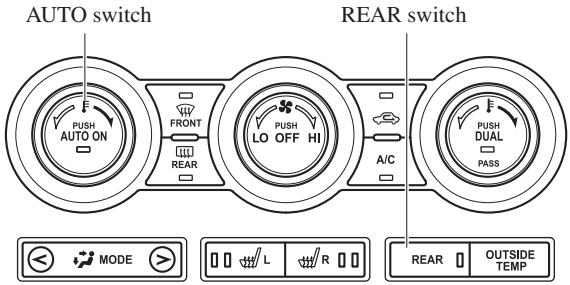

Rear

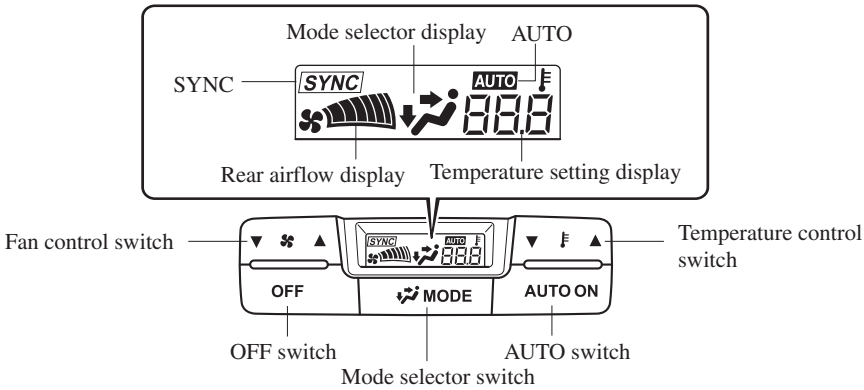

▼Control Switches

Rear switch

Press the rear switch to operate the rear air conditioning.
The indicator illuminates to indicate that the rear air conditioning is operating.

AUTO switch

By pressing the AUTO switch the following functions will be automatically controlled in accordance with the set temperature:

- Airflow temperature

- Amount of airflow
- Selection of airflow mode

OFF switch

Pressing the OFF switch shuts off the climate control system.

Temperature control switch

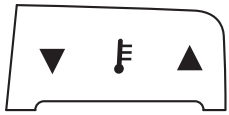

This switch controls temperature. Press ▲ for hot and ▼ for cold.

Fan control switch

The fan has five speeds.

Mode selector switch

The desired airflow mode can be selected (page 6-13).

▼Operation of Automatic Air Conditioning

Operation from front seats

1. Turn the front air conditioning on.
2. Press the rear switch. The rear air conditioning operates.

3. Selection of the airflow mode, airflow amount and temperature will be automatically controlled to the same temperature setting as the front air conditioner for the driver's side.

NOTE

- *If the AUTO switch is pressed while the front A/C switch is off, the rear air conditioning operates only to circulate air.*
- *Setting the temperature to the maximum high or low will not provide the desired temperature at a faster rate.*
- *When selecting heat, the system will restrict airflow until it has warmed to prevent cold air from blowing out of the vents.*
- *When the rear air conditioner is controlled to the same temperature setting as the front air conditioner for the driver's side, "SYNC" is displayed on the rear screen.*

Operation from rear seats

1. Turn the front air conditioning on.
2. Press the AUTO switch. The selection of the airflow mode and airflow amount will be automatically controlled.

3. Use the temperature control switch to set the desired temperature.

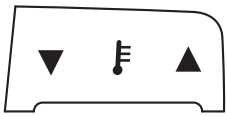

NOTE

- *If the AUTO switch is pressed while the front A/C switch is off, the rear air conditioning operates only to circulate air.*
- *Setting the temperature to the maximum high or low will not provide the desired temperature at a faster rate.*
- *When selecting heat, the system will restrict airflow until it has warmed to prevent cold air from blowing out of the vents.*
- *When the rear air conditioner is operated automatically, "AUTO" is displayed on the rear screen.*
- *When the rear air conditioner is controlled to the same temperature setting as the front air conditioner for the driver's side, "SYNC" is displayed on the rear screen.*

4. To turn off the system, press the OFF switch.

Antenna

▼AM/FM Radio Antenna

The antenna is printed onto the window glass.

⚠ CAUTION

When washing the inside of the window which has an antenna, use a soft cloth dampened in lukewarm water, gently wiping the antenna lines.
Use of glass cleaning products could damage the antenna.

▼Satellite Radio Antenna*

The satellite radio antenna receives SIRIUS signals.

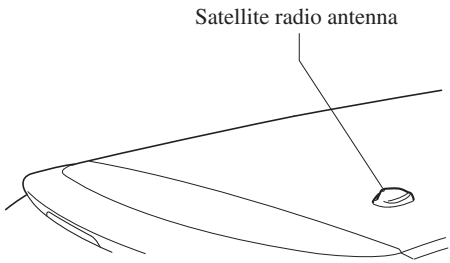

Operating Tips for Audio System

⚠ WARNING

Do not adjust the audio control switches while driving the vehicle:
Adjusting the audio while driving the vehicle is dangerous as it could distract your attention from the vehicle operation which could lead to a serious accident. Always adjust the audio while the vehicle is stopped. Even if the audio control switches are equipped on the steering wheel, learn to use the switches without looking down at them so that you can keep your maximum attention on the road while driving the vehicle.

⚠ CAUTION

- *For the purposes of safe driving, adjust the audio volume to a level that allows you to hear sounds outside of the vehicle including car horns and particularly emergency vehicle sirens.*
- *Do not install non-genuine speakers since their vibration may affect the Dynamic Stability Control (DSC)/Roll Stability Control (RSC) sensors.*

NOTE

- *To prevent the battery from being discharged, do not leave the audio system on for a long period of time when the engine is not running.*
- *If a cellular phone or CB radio is used in or near the vehicle, it could cause noise to occur from the audio system, however, this does not indicate that the system has been damaged.*

*Some models.

▼Radio Reception

AM characteristics

AM signals bend around such things as buildings or mountains and bounce off the ionosphere. Therefore, they can reach longer distances than FM signals. Because of this, two stations may sometimes be picked up on the same frequency at the same time.

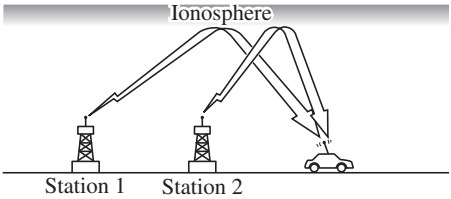

FM characteristics

An FM broadcast range is usually about 40—50 km (25—30 miles) from the source. Because of extra coding needed to break the sound into two channels, stereo FM has even less range than monaural (non-stereo) FM.

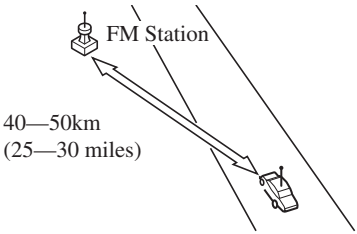

Signals from an FM transmitter are similar to beams of light because they do not bend around corners, but they do reflect. Unlike AM signals, FM signals cannot travel beyond the horizon. Therefore, FM stations cannot be received at the great distances possible with AM reception.

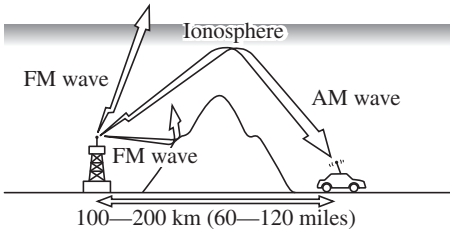

Atmospheric conditions can also affect FM reception. High humidity will cause poor reception. However, cloudy days may provide better reception than clear days.

Multipath noise

Since FM signals can be reflected by obstructions, it is possible to receive both the direct signal and the reflected signal at the same time. This causes a slight delay in reception and may be heard as a broken sound or a distortion. This problem may also be encountered when in close proximity to the transmitter.

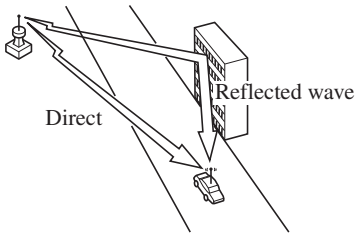

Flutter/Skip noise

Signals from an FM transmitter move in straight lines and become weak in valleys between tall buildings, mountains, and other obstacles. When a vehicle passes through such an area, the reception conditions may change suddenly, resulting in annoying noise.

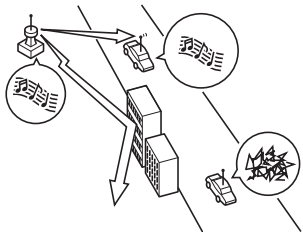

Weak signal noise

In suburban areas, broadcast signals become weak because of distance from the transmitter. Reception in such fringe areas is characterized by sound breakup.

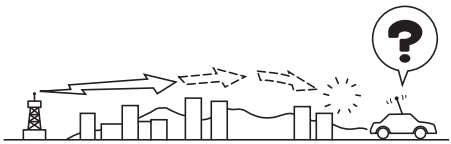

Strong signal noise

This occurs very close to a transmitter tower. The broadcast signals are extremely strong, so the result is noise and sound breakup at the radio receiver.

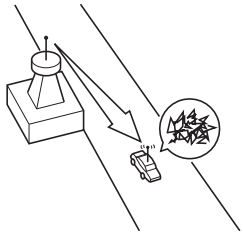

Station drift noise

When a vehicle reaches the area of two strong stations broadcasting at similar frequencies, the original station may be temporarily lost and the second station picked up. At this time there will be some noise from this disturbance.

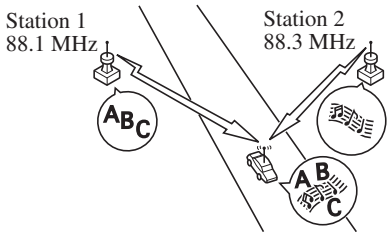

▼Operating Tips for CD Player

Condensation phenomenon

Immediately after turning on the heater when the vehicle is cold, the CD or optical components (prism and lens) in the CD player may become clouded with condensation. At this time, the CD will eject immediately when placed in the unit. A clouded CD can be corrected simply by wiping it with a soft cloth. Clouded optical components will clear naturally in about an hour. Wait for normal operation to return before attempting to use the unit.

Handling the CD player

The following precautions should be observed.

- Do not spill any liquid on the audio system.

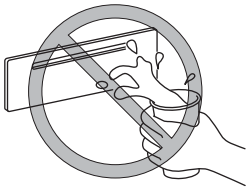

- Do not insert any objects, other than CDs, into the slot.

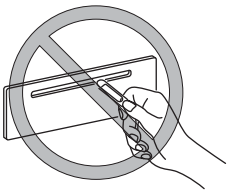

- The CD revolves at high speed within the unit. Defective (cracked or badly bent) CDs should never be used.

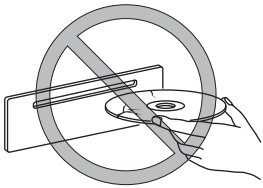

- Do not use non-conventional discs such as heart-shaped, octagonal discs, etc. The disc may not eject resulting in a malfunction.

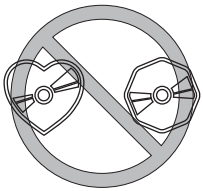

- If the memory portion of the CD is transparent or translucent, do not use the disc.

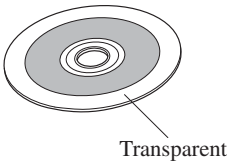

- A new CD may have rough edges on its inner and outer perimeters. If a disc with rough edges is used, proper setting will not be possible and the CD player will not play the CD. In addition, the disc may not eject resulting in a malfunction. Remove the rough edges in advance by using a ball-point pen or pencil as shown below. To remove the rough edges, rub the side of the pen or pencil against the inner and outer perimeter of the CD.

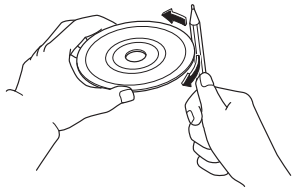

- When driving over uneven surfaces, the sound may jump.

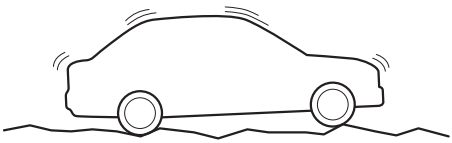

- The CD player has been designed to play CDs bearing the identification logo as shown below. No other discs can be played.

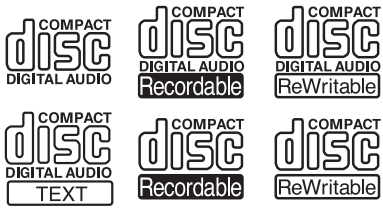

- Use discs that have been legitimately produced. If illegally-copied discs such as pirated discs are used, the system may not operate properly.
- Be sure never to touch the signal surface when handling the CDs. Pick up a CD by grasping the outer edge or the edge of the hole and the outer edge.

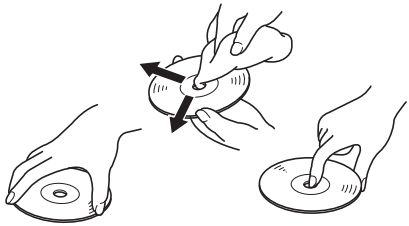

- Do not stick paper or tape on the CD. Avoid scratching the reverse side (the side without a label). The disc may not eject resulting in a malfunction.
- Dust, finger smudges, and dirt can decrease the amount of light reflected from the signal surface, thus affecting sound quality. If the CD should become soiled, gently wipe it with a soft cloth from the center of the CD to the edge.
- Do not use record sprays, antistatic agents, or household spray cleaners. Volatile chemicals such as benzine and thinner can also damage the surface of the CD and must not be used. Anything that can damage, warp, or fog plastic should never be used to clean CDs.
- Insert discs one by one. If two discs are inserted at the same time, the system may not operate properly.
- The CD player ejects the CD if the CD is inserted upside down. Also dirty and/or defective CDs may be ejected.
- Do not insert cleaning discs in the CD player.

- Do not insert any disc with a peel-off seal affixed to it.
- This unit may not be able to play certain CD-R/CD-RWs made using a computer or music CD recorder due to disc characteristics, scratches, smudges, dirt, etc., or due to dust or condensation on the lens inside the unit.
- Storing CDs in the vehicle exposed to direct sunlight or high temperature may damage the CD-R/CD-RWs, and make them unplayable.
- CD-R/CD-RW exceeding 700 MB cannot be played.
- This unit may not be able to play certain discs made using a computer due to the application (writing software) setting used. (For details, consult the store where the application was purchased.)
- It is possible that certain text data, such as titles, recorded on a CD-R/CD-RW may not be displayed when musical data (CD-DA) is playing.
- The period from when a CD-RW is inserted to when it begins playing is longer than a normal CD or CD-R.
- Completely read the instruction manual and cautions for CD-R/CD-RWs.
- Do not use discs with cellophane tape adhering, partially peeled off labels, or adhesive material exuding from the edges of the CD label. Also, do not use discs with a commercially-available CD-R label affixed. The disc may not eject resulting in a malfunction.

▼Operating tips for MP3

NOTE

Supply of this product only conveys a license for private, non-commercial use and does not convey a license nor imply any right to use this product in any commercial (i.e. revenue-generating) real time broadcasting (terrestrial, satellite, cable and/or any other media), broadcasting/streaming via the Internet, intranets and/or other networks or in other electronic content distribution systems, such as pay-audio or audio-on-demand applications. An independent license for such use is required. For details, please visit http://www.mp3licensing.com.

- This audio system handles MP3 files that have been recorded on CD-R/CD-RW/CD-ROMs. Discs that have been recorded using the following formats can be played:
  - ISO 9660 level 1
  - ISO 9660 level 2
  - Joliet extended format
  - Romeo extended format
- This unit handles MP3 files conforming to the MP3 format containing both header frames and data frames.
- This unit can play multi-session recorded discs that have up to 50 sessions.
- This unit can play MP3s with sampling frequencies of 8/11.025/12/16/22.05/24/32/44.1/48 kHz.
- This unit can play MP3 files that have been recorded in bit rates of 8 kbps to 320 kbps. Nonetheless, to insure enjoyment of music with consistent sound quality, it is recommended to use discs that have been recorded at a bit rate of 128 kbps or more.

- If a disc has both music data (CD-DA) and MP3 files, playback of the two file types differs depending on how the disc was recorded.
- Packet written discs cannot be played on this unit.
- This unit does not play CDs recorded using MP3i (MP3 interactive), MP3 PRO and RIFF MP3 formats.

About folders and files

- The order of hierarchy for MP3 files and folders during playback or other functions is from shallow to deep. The arrangement and playing order of a recorded disc containing MP3 files is as follows:
  - **File number**
    A numerical file number is assigned to each file in a folder starting from the deepest hierarchy.
  - **Folder number**
    A numerical folder number is assigned to each folder starting from the deepest hierarchy.

NOTE

Folders and tracks (files) within the same hierarchy play in the order they were written to the disc depending on the write software.

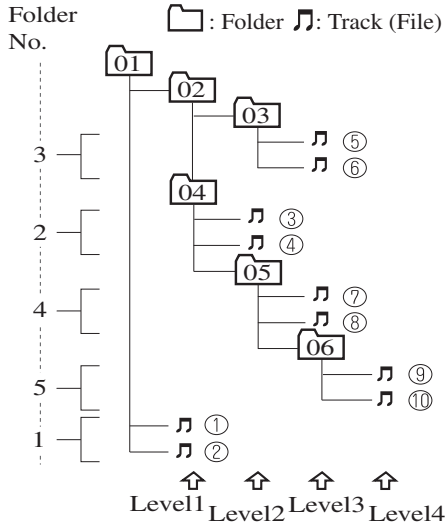

Playback may not occur in the above hierarchy depending on the audio unit.

- The folder order is automatically assigned and this order cannot be optionally set.
- Any folder without an MP3 file will be ignored. (It will be skipped and the folder number will not be displayed.)
- MP3 files not conforming to the MP3 format containing both header frames and data frames will be skipped and not played.
- This unit will play MP3 files that have up to eight levels. However, the more levels a disc has, the longer it will take to initially start playing. It is recommended to record discs with two levels or less.
- A single disc with up to 512 files can be played and a single folder with up to 255 files can be played.
- When naming an MP3 file, be sure to add an MP3 file extension (.mp3) after the file name.

- The number of characters which can be displayed is restricted.

⚠ CAUTION

This unit can only play MP3 files that have an MP3 file extension (.mp3) attached. Do not attach an MP3 file extension to any other type file as it could cause noise to be emitted or a malfunction in the unit.

About ID3 Tag display

- This unit can only display ID3 Tag album, track and artist names that have been input using Ver.1.0/1.1/2.2/2.3/2.4 formats. Any other data that may have been input cannot be displayed.
- This unit cannot display some characters. Characters which cannot be displayed are indicated by an asterisk (✱).

Specialized glossary

MP3

Abbreviation for “MPEG Audio Layer 3”. A technical standard for audio compression as decided by the ISO*1 MPEG working group. Use of MP3 allows for audio data to be compressed to approximately a tenth of the source data size.

*1 International Organization for Standardization

ISO 9660

An international standard for logical formatting of CD-ROM files and folders. It is divided into three separate levels based on differences in file naming procedures, data configuration and other characteristics.

Multi-session

A session is the complete amount of data recorded from the beginning to the end of a single period of CD-ROM, CD-R/CD-RW data recording. Multi-session refers to the existence of data from two or more sessions on a single disc.

Sampling

Refers to the process of encoding analog audio data at regular intervals and converting it to digital data. The sampling rate refers to the number of times a sample is taken in one second and is expressed in Hz units. Increasing the sampling rate improves the sound quality but also increases the data size.

Bit rate

Refers to the volume of data per second, expressed in bps (bits per second). Generally, the larger the number of the transfer bit rate when compressing an MP3 file, the more information regarding musical reproduction it carries, and therefore the better the sound quality.

Packet writing

A general term for the method, similar to that used for floppy discs or hard drives, of recording the required file in a single increment on a CD-R and similar.

ID3 Tag

ID3 tag is a method for storing information related to the music in an MP3 file. Information such as track, artist and album name can be stored. This content can be freely edited using ID3 editing function software.

VBR

Abbreviation for Variable Bit Rate. While CBR (Constant Bit Rate) is generally used, VBR varies the bit rate for audio compression according to compression conditions and this allows for compression with preference given to sound quality.

▼Operating Tips for WMA

WMA is short for Windows Media Audio and is the audio compression format used by Microsoft.
Audio data can be created and stored at a higher compression ratio than MP3.

* Microsoft and Windows Media are registered trademarks of Microsoft Corporation U.S. in the United States and other countries.

Playable WMA files are as follows:

Item	Content
Specification	Ver 7.0, 8.0, 9.0 (standard) Ver 10 (standard)
Sampling rate	32/44.1/48 kHz
Bit rate	32—320 kbps

⚠ CAUTION

This unit plays files with the (.wma) file extension as a WMA file. Do not use the WMA file extension for files other than WMA files. Otherwise, it could result in noise or a malfunction.

- Track, artist and album name information is recorded as data termed “WMA-Tag”, and this information is displayable.
- WMA files written under specifications other than the indicated specification may not play normally or files or folder names may not display correctly.
- The file extension may not be provided depending on the computer operating system, version, software, or settings. In this case, add the file extension “.wma” to the end of the file name, and then write it to the disc.

▼Operating Tips for AAC

Advanced Audio Coding (AAC) is standardized voice compression established by the ISO[*1] working group (MPEG). Audio data can be created and stored at a higher compression ratio than MP3.

*1 International Organization for Standardization

Playable AAC file specifications

This unit supports playback of AAC files recorded in CD-R and CD-RW.

Playable AAC files are as follows:

Item	Content
Specification	MPEG-4 AAC
Sampling rate	8/11.025/12 kHz 16/22.05/24 kHz 32/44.1/48 kHz
Bit rate	24—320 kbps

⚠ CAUTION

This unit plays files with the file extension (.m4a) as an AAC file. Do not use the AAC file extension for files other than AAC files. Otherwise, it could result in noise or a malfunction.

- Song, artist, and album name information in the AAC file is recorded as data termed "iTunes, m4a, Meta-Data applicable", and this information is displayable.
- AAC files written under specifications other than the indicated specification may not play normally or files or folder names may not display correctly.
- The file extension may not be provided depending on the computer operating system, version, software, or settings. In this case, add the file extension ".m4a" to the end of the file name, then write it to the disc.

▼Operating Tips for USB device

This unit supports playback of MP3/WMA/AAC files recorded to USB device.

NOTE

- *Music data (MP3/WMA/AAC (.m4a) format) stored in a USB mass-storage class compliant device (such as USB flash memory) can be played.*
- *Playback may not be possible depending on the type and condition of the USB flash memory even if the audio file complies with the standard above.*
- *A copyright protected WMA/AAC file cannot be played in this unit.*
- *The order of the music data stored in the device may differ from the playback order.*
- *To prevent loss or damage of stored data, we recommend that you always back up your data.*
- *If a device exceeds the maximum electric current value of 500 mA, it may not operate or recharge when connected.*
- *Do not pull out the USB device while in the USB mode (only pull it out while in FM/AM radio or CD mode).*
- *The device will not operate if the data is password protected.*

Playable MP3 file specifications

Playable MP3 files are as follows:

Item	Content
Specification	MPEG1 AUDIO LAYER III MPEG2 AUDIO LAYER III MPEG2.5
Sampling rate	44.1/48/32 kHz (MPEG1) 22.05/24/16 kHz (MPEG2) 11.025/12/8 kHz (MPEG2.5)
Bit rate	32—320 kbps (MPEG1) 8—160 kbps (MPEG2) 8—160 kbps (MPEG2.5)

⚠ CAUTION

This unit plays files with the file extension (mp3) as an MP3 file. Do not use the MP3 file extension for files other than MP3 files. Otherwise, it could result in noise or a malfunction.

- MP3 files written under specifications other than the indicated specification may not play normally or files or folder names may not display correctly.
- The file extension may not be provided depending on the computer operating system, version, software, or settings. In this case, add the file extension ".mp3" to the end of the file name, and then write it to the memory.

Playable WMA file specification

Playable WMA files are as follows:

Item	Content
Specification	Windows Media Audio Version 7.0, 8.0, 9.0 (standard)
Sampling rate	8/11.025/12 kHz (LOW) 16/22.05 kHz (MID) 44.1/48/32 kHz (HI)
Bit rate	32—320 kbps

⚠ CAUTION

This unit plays files with the file extension (wma) as a WMA file. Do not use the WMA file extension for files other than WMA files. Otherwise, it could result in noise or a malfunction.

- WMA files written under specifications other than the indicated specification may not play normally or files or folder names may not display correctly.
- The file extension may not be provided depending on the computer operating system, version, software, or settings. In this case, add the file extension ".wma" to the end of the file name, and then write it to the memory.

Playable AAC file specification

Playable AAC files are as follows:

Item	Content
Specification	MPEG4 AAC-LC
Sampling rate	8/11.025/12 kHz 16/22.05/24 kHz 32/44.1/48 kHz
Bit rate	16—320 kbps

⚠ CAUTION

This unit plays files with the file extension (.aac/.m4a) as an AAC file. Do not use the AAC file extension for files other than AAC files. Otherwise, it could result in noise or a malfunction.

- AAC files written under specifications other than the indicated specification may not play normally or files or folder names may not display correctly.
- The file extension may not be provided depending on the computer operating system, version, software, or settings. In this case, add the file extension ".mp4" or ".m4a" to the end of the file name, and then write it to the memory.

▼Operating Tips for iPod

This unit supports playback of music files recorded to an iPod.

- iPod is a trademark of Apple Inc., registered in the U.S. and other countries.
- iPod classic is a trademark of Apple Inc., registered in the U.S. and other countries.
- iPod nano is a trademark of Apple Inc., registered in the U.S. and other countries.
- iPod touch is a trademark of Apple Inc., registered in the U.S. and other countries.
- iPhone is a trademark of Apple Inc., registered in the U.S. and other countries.
- iPad is a trademark of Apple Inc., registered in the U.S. and other countries.

Connectable iPods are as follows:
- iPod: 5G
- iPod classic
- iPod nano: 1/2/3/4/5/6G
- iPod touch*1: 1/2/3/4G
- iPhone*1: iPhone/3G/3GS/4/4S
- iPad*1: 1st/2nd/3rd

*1 Only iPod function

⚠ CAUTION

- *Remove the iPod when it is not in use. Because the iPod is not designed to withstand excessive changes in temperature inside the cabin, it could be damaged or the battery may deteriorate due to the excessive temperature or humidity inside the cabin if it is left in the vehicle.*
- *If data in the iPod is lost while it is connected to the unit, Mazda cannot guarantee recovery of any lost data.*
- *If the iPod battery is deteriorated, the iPod may not recharge and playback may not be possible when it is connected to the unit. Replace the iPod battery immediately.*
- *Be careful not to pinch the iPod connecting cable when opening/closing the center console.*
- *For the details on using the iPod, refer to the iPod instruction manual.*
- *When connecting the iPod to a USB port, all commands are made from the audio unit. iPod control is not possible.*

NOTE

The audio unit cannot display the images or videos stored in an iPod.

Audio Set

CAUTION

Do not press the panel strongly or press it with a sharp-pointed object. Otherwise, the panel could be damaged.

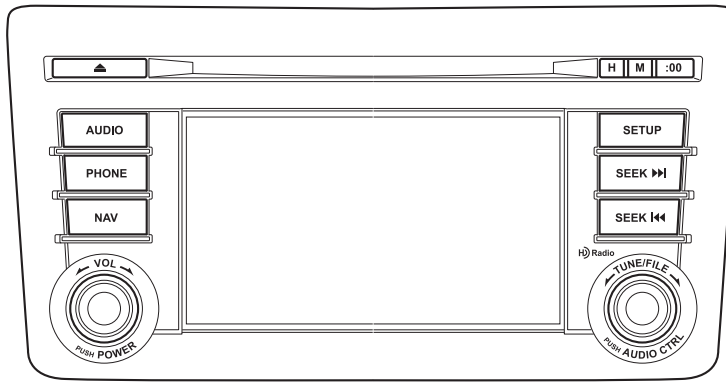

① Power/Volume/Display/Sound Controls ..... page 6-30
② Operating the Radio ..... page 6-34
③ Operating the Satellite Radio ..... page 6-38
④ Operating the Compact Disc (CD) Player ..... page 6-46
⑤ How to use the Auxiliary jack/USB port ..... page 6-49
⑥ Error Indication ..... page 6-49
⑦ Setup ..... page 6-50

▼Power/Volume/Display/Sound Controls

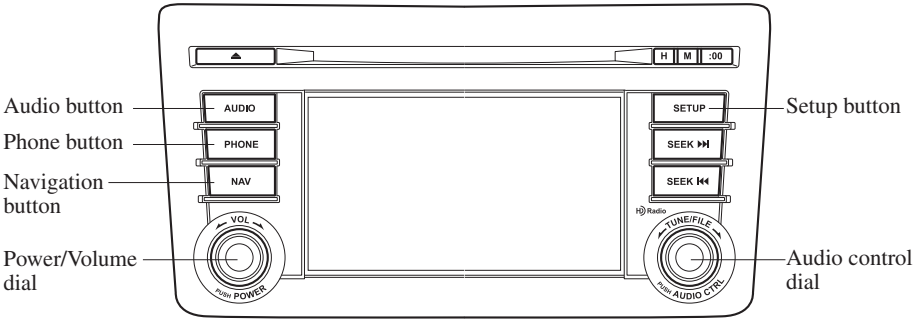

Power ON/OFF

Switch the ignition to ACC or ON.
Press the power/volume dial to turn the audio system on. Press the power/volume dial again to turn the audio system off.

Volume adjustment

To adjust the volume, turn the power/volume dial.
Turn the power/volume dial to the right to increase volume, to the left to decrease it.

Display setting

Press the setup button (SETUP) to display the display setting screen.
Touch the Display on-screen tab to select the item you would like to change.

Brightness adjustment

+ : Increase brightness
− : Decrease brightness

Contrast adjustment

+ : Higher contrast
− : Lower contrast

Tint adjustment*1

+ : Green tint enhancement color
− : Red tint enhancement color
*1 Adjustment can be performed only while in the rear view camera mode.

Color adjustment*1

+ : To deepen a color
− : To fade a color
*1 Adjustment can be performed only while in the rear view camera mode.

Daytime/nighttime screen setting*1

The daytime or nighttime screen can be selected even if the headlights are illuminated or turned off (when bright screen is required at night or dark screen is required at noon).
Day : Daytime screen setting
Night : Nighttime screen setting
Auto : Switches screen automatically according to headlight illumination condition
*1 The setting cannot be made while in rear view camera mode.

Display OFF

The display can be turned off. Touch the Display Off on-screen button to turn the display off.
The display can be turned back on as follows:

- Press the audio button (AUDIO) to display the audio screen.
- Press the navigation button (NAV) to display the navigation screen.
- Press the phone button (PHONE) to display the Bluetooth® dial screen.
- Press the setup button (SETUP) to display the setup dial setting screen.
- Press the audio control dial to display the setup sound setting screen.
- Shift to the R position to change to the rear view camera mode.
  Shift to a position other than R to return to the display off condition.

NOTE
The screen can also be turned off using voice recognition.
Refer to Component Parts on page 6-117.

Display setting reset

All of the screen setting values can be reset to their initial settings.

1. Touch the Reset on-screen button.
2. Touch the Yes on-screen button.

Audio sound adjustment

Press the audio control dial or touch the Sound on-screen button to display the sound setting screen.

Indication	Setting value
Bass (Low pitch sound)	+ : Low pitch enhancement − : Low pitch reduction
Treble (Treble sound)	+ : Treble enhancement − : Treble reduction
Balance (Left/right volume balance)	Left : Right side volume reduction Right : Left side volume reduction
Fader (Front/back volume balance)	Rear : Front speaker volume reduction Front : Rear speaker volume reduction
Button Beep (Audio operation sound)	On/Off : on/off*1
Auto Level Control*2 (Automatic volume adjustment)	+ : Level up − : Level down
AudioPilot*3 (Automatic volume adjustment)	On/Off : on/off
Centerpoint*3 (Automatic surround level adjustment)	On/Off : on/off

*1 Some functions do not turn off
*2 Standard audio
*3 Bose® Sound System

Automatic Level Control (ALC)

The automatic level control is a feature that automatically adjusts audio volume and sound quality according to the vehicle speed. The volume increases in accordance with the increase in vehicle speed, and decreases as vehicle speed decreases.

AudioPilot® 2*4

AudioPilot® 2 automatically adjusts audio volume and sound quality in accordance with the level of noise entering the vehicle interior while driving. When AudioPilot® 2 is turned on, the system automatically calculates the conditions for optimum hearing of sound which may be difficult to hear depending on exterior noise. AudioPilot® 2 can be set on or off.

*4 AudioPilot® 2 is a registered trademark of Bose Corporation.

Centerpoint®*5

Centerpoint® offers you the experience of 5.1-channel surround sound in your vehicle even with your conventional 2-channel stereo CDs. Centerpoint® can be set on or off.

*5 Centerpoint® is a registered trademark of Bose Corporation.

NOTE

- *Centerpoint® operates optimally with a 2-channel stereo CD. Audio files encoded with high compression can be played, however, they may result in poor sound quality.*
- *Centerpoint® is available for 2-channel stereo audio except for AM radio/FM radio/AUX/Bluetooth® audio.*

Sound setting reset

The settings for bass, treble, balance, and fade can be returned to their initial settings.

1. Touch the [Reset] on-screen button.
2. Touch the [Yes] on-screen button.

MEMO

▼Operating the Radio

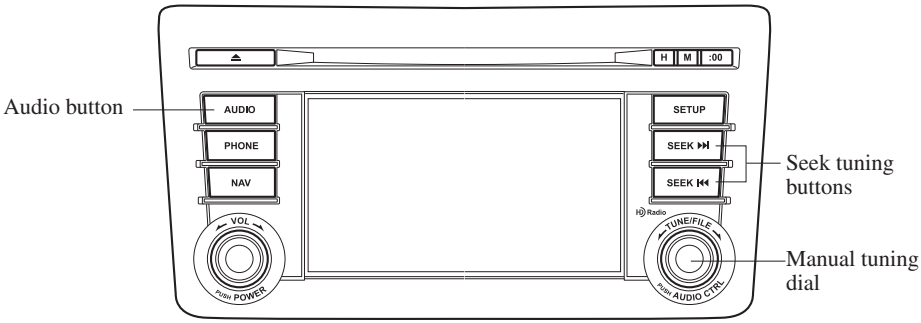

Radio ON

(Connected Satellite Radio)
Press the audio button (AUDIO) and touch the FM1 /AM on-screen tab.
(Unconnected Satellite Radio)
Press the audio button (AUDIO) and touch the FM or AM on-screen tab.

Band selection

(Connected Satellite Radio)
Touch the FM1 /AM on-screen tab to switch the band as follows:
FM1→FM2→AM

NOTE
- *FM1/FM2 is displayed when FM1 is selected, FM2 /AM is displayed when FM2 is selected, and FM/ AM is displayed when AM is selected.*
- *If the FM broadcast signal becomes weak, reception automatically changes from STEREO to MONO for reduced noise, and the "STEREO" indicator will no longer display.*

(Unconnected Satellite Radio)
Touch the AM on-screen tab to select AM. Touch the FM on-screen tab to select FM1 and FM2.

NOTE
- *When FM1 is selected, FM1/FM2 is displayed. When FM2 is selected, FM1/FM2 is displayed.*
- *If the FM broadcast signal becomes weak, reception automatically changes from STEREO to MONO for reduced noise, and the "STEREO" indicator will no longer display.*

Tuning

The radio has the following tuning methods: Manual, Seek, Scan, Preset channel, and Auto memory tuning. The easiest way to tune stations is to set them on preset channels.

NOTE
If the power supply is interrupted (fuse blows or the battery is disconnected), the preset channels will be erased.

Manual tuning

Turning the manual tuning dial will change the frequency higher or lower.

NOTE
When an HD Radio *broadcast is being received, a receivable multicast channel is also received.*

Seek tuning

Pressing the seek tuning button (⏭ ,⏮) will cause the tuner to seek a higher or lower frequency automatically.

NOTE
- *If you continue to press and hold the seek tuning button (⏭ ,⏮) the frequency will continue changing without stopping.*
- *When an* HD Radio *broadcast is being received, a receivable multicast channel is also received.*

Scan tuning

You can search for receivable radio stations by touching the Scan on-screen button.
Scanning stops at each station for about five seconds.
Touch the Scan on-screen button one time during reception to continue receiving a broadcasting station.

Preset channel tuning

The six preset channels can be used to store six AM and twelve FM stations.

1. To set a channel, first select AM, FM1, or FM2. Tune to the desired station.
2. Press and hold any of the preset on-screen buttons. The reception frequency is programmed and displayed on the preset button.
3. Repeat this operation for the other stations and bands you want to store. When receiving a programmed frequency, select AM, FM1, or FM2 and touch the preset on-screen button.

NOTE
The programmed frequency is displayed on the preset button.

Auto memory tuning

This is especially useful when driving in an area where the local stations are unknown. Additional AM/FM stations can be stored without disturbing the previously set channels.

1. Touch the Auto Memory on-screen button. The auto memory preset list is displayed and the previously tuned frequency is received.
2. Touch the Update List on-screen button to display the frequencies of up to ten radio stations on the auto memory preset list.
3. Touch the desired frequency.

NOTE
Touch the Back *on-screen button during auto memory tuning to return to the AM/FM main screen.*

Radio Broadcast Data System (RBDS)

Radio text information display

A maximum of 64 characters of radio text information sent from a broadcasting station is displayed in the audio display.

NOTE
Radio text information is a function of FM radio. Text information is not displayed in the following:
- *During* HD Radio *reception*
- *Not an RBDS broadcast*
- *During HD reception*
- *RBDS broadcast, but radio text is not transmitted from the radio station*

Genre Seek

Some FM stations transmit Genre codes (Program type like a Rock, News, and so on). This code enables alternative stations transmitting the same Genre code to be found quickly. To select from the genre list, touch the [Genre Seek] on-screen button while in the FM mode and the desired Genre Seek.

(To scan for Genre Seek:)

1. Touch the genre type which you want to select.
2. Touch the [Genre Seek ⏭], [Genre Seek ⏮] on-screen button.

Ex.)
89.3 is currently being received. With Rock selected as the Genre, the radio stations broadcasting Rock are at the following frequencies.
98.3*1, 98.7, 104.3*1, 107.1
*1 Radio stations with good reception
The frequency changes as follows each time the Genre Seek on-screen button is pressed.
89.3→98.3→104.3→98.3

NOTE
- *Only one Genre can be selected.*
- *Touch the* [Back] *on-screen button to return to the FM1 or FM2 main screen.*
- *It may not be possible to receive any station even if the Genre Seek function is used.*
- *If a program in the selected genre is not broadcast to a region, reception is not possible even if the Genre Seek function is used.*
- *The Genre Seek function searches for genre code (program type) which FM analog broadcasts transmit.* HD Radio *specialty programs (HD2-HD8) cannot be searched because they are not FM analog broadcasts.*
- *If radio stations which are selected by scanning using the Genre Seek function are* HD Radio *broadcasting stations, they are changed from analog broadcasts to* HD Radio *broadcasts after a few seconds if the reception conditions are good. The genre is displayed after the switch, however, the genre for FM analog broadcasts may differ.*

HD Radio

What is HD Radio™ Technology and how does it work?

HD Radio™ Technology is the digital evolution of analog AM/FM radio. Your radio product has a special receiver which allows it to receive digital broadcasts (where available) in addition to the analog broadcasts it already receives. Digital broadcasts have better sound quality than analog broadcasts as digital broadcasts provide free, crystal clear audio. For more information, and a guide to available radio stations and programming, please visit www.hdradio.com.

Benefits of HD Radio™ Technology

(Information)
The song title, artist name and genre will appear on the screen when available by the radio station.
(Multicast)
On the FM radio frequency most digital stations have “multiple” or supplemental programs on each FM station.

Listening to HD Radio™ Technology

If HD turns on by selecting a radio station which is an HD Radio broadcasting station, the analog broadcast is switched to an HD Radio broadcast automatically after a few seconds and then received. For FM, HD Radio , and for AM, HD is displayed, and the HD illuminates in orange.
If the HD Radio broadcast is stopped and changed to an analog broadcast, press down HD to turn off HD .

Multicast channel selection (FM)

Press HD 12345678 on-screen button to switch to the multi-cast channel for the displayed number.
The number of multi-cast channels which can be received differs depending on the radio station.

NOTE

- *If an analog broadcast is received once and* HD Radio *is received while HD1 is selected, the audio unit switches to the* HD Radio *station automatically.*
- *When the* HD Radio *button is illuminated, there could be a noticeable difference in sound quality and volume when a change from digital to analog signals occurs. If the sound quality and volume become noticeably diminished or cut off, touch the HD button to turn off* HD Radio *(*HD Radio *button is not illuminated).*
- *Once an analog broadcast is received when HD1 is selected from the preset channels, it is switched to* HD Radio *automatically. If the radio reception conditions are poor, or* HD *is off, switching to* HD Radio *broadcasts is not possible.*
- *When an HD specialty channel (HD2 to HD8) is selected from the preset channels, “No HD signal” is displayed and no audio is output until* HD Radio *is received. If the radio reception conditions are poor, “No HD signal” continues to be displayed.*
- *If the* HD *is not illuminated or does not illuminate in orange, information such as song titles of the* HD Radio *station are received, however, the audio output is analog. If information can no longer be received and the non-reception condition continues,* HD Radio *and* HD 12345678 *on-screen buttons disappear.*

▼Operating the Satellite Radio*

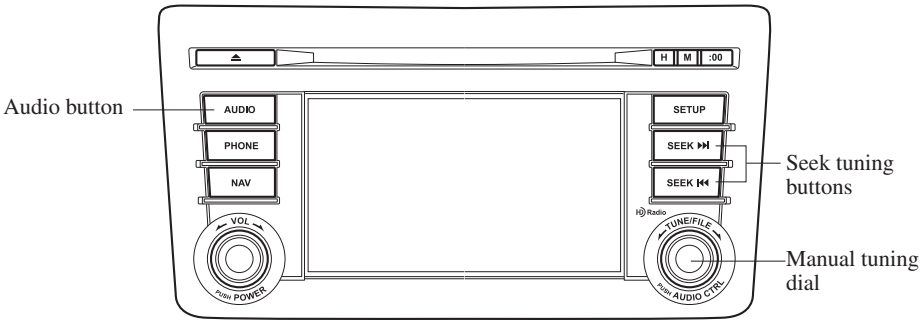

NOTE

This equipment has been tested and found to comply with the limits for a Class B digital device, pursuant to Part 15 of the FCC Rules. These limits are designed to provide reasonable protection against harmful interference in a residential installation. This equipment generates, uses, and can radiate radio frequency energy and if not installed and used in accordance with the instructions, may cause harmful interference to radio communications. However, there is no guarantee that interference will not occur in a particular installation. If this equipment does cause harmful interference to radio or television reception, which can be determined by turning the equipment off and on, the user is encouraged to try to correct the interference by one or more of the following measures:

- Increase the separation between the equipment and tuner.

- Connect the equipment into an outlet on a circuit different from that to which the tuner is connected.

- Consult the dealer or an experienced radio/ TV technician for help.

What is satellite radio?

With over 130 channels, SIRIUS Satellite Radio brings you more of what you love. Get channels and channels of commercial-free music, plus sports, news, talk, entertainment and more.

Commercial-free music from nearly every genre —rock to pop, hip-hop to country, jazz, classical and more. Plus live performances and artist-dedicated channels.

Live sports Play-by-Play & Expert Talk —every NFL game, every NASCAR® race, 24/7 sports talk, college sports and more.

Exclusive entertainment, comedy and talk —The biggest names, compelling talk, hilarious comedy.

World-class news plus local traffic and weather.

Sign up for SIRIUS Satellite Radio today!

*Some models.

NOTE
Exclusive to Sirius. If your vehicle is equipped with Sirius, your new Mazda includes a free introductory subscription with a limited term trial offer. Call 888-539-7474 to activate. For more information, visit www.siriusxm.com. Satellite radio can be subscribed to and received in the United States (Except Alaska and Hawaii) and Canada. Contact Authorized Mazda Dealer for details.

How to Activate Satellite Radio

You must call SIRIUS to activate your service. Activation is free and takes only a few minutes.
SIRIUS service uses an ID code to identify your radio. This code is needed to activate SIRIUS service, and report any problems.

Please have the following information ready:
- SIRIUS ID (12-digit electronic serial no, or ESN*1)
- Valid credit card information (may not be required at initial sign-up)

*1 ESN: Electronic Serial Number
Be sure you are parked outside with a clear view of open sky, you will be instructed to turn on your radio (in SIRIUS mode and tuned to channel 184). Activation typically takes only 2—5 minutes.

Displaying the SIRIUS ID (ESN)

Turn the manual tuning dial and select channel 0 to display the twelve-digit Electronic Serial Number (ESN) for the SIRIUS tuner.

SIRIUS operation

All operations of the satellite radio are conducted by means of the audio unit.

SIRIUS radio mode selection

Touch the SIRIUS on-screen tab on the audio screen to receive the previously received SIRIUS channel.
Every time the SIRIUS on-screen tab is touched, the bank changes in the order shown below.

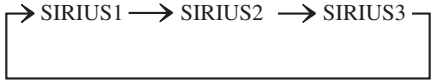

NOTE
- *SIRIUS1, SIRIUS2 and SIRIUS3: six stations can be stored in each bank for convenient access to your favorite stations.*
- SIRIUS1 *is displayed when SIRIUS1 is selected,* SIRIUS2 *is displayed when SIRIUS2 is selected, and* SIRIUS3 *is displayed when SIRIUS3 is selected.*

Operation in the initial state

It may take some time to start up the equipment when it is in the initial state, when there is a change in the user's subscription condition, when the firmware is updated or when the SIRIUS channel map is changed.
“Updating Channels XXX %” is displayed when the SIRIUS channel map is changed.
If the user contract content is changed, “Subscription Updated” is displayed.
When the firmware is updated, the “Updating Receiver” is displayed.
Updating could take as long as a few minutes depending on the geographical area. When the unit is in an initialized state, channel 184 is displayed after the display indicates “Updating Receiver”.

NOTE
Do not perform the following operation while "Updating Channels XXX%", "Updating Receiver" is displayed. Otherwise, the updating procedure will be canceled.
- *Turning off the audio power*
- *Switching to other modes*
- *Switching the ignition off*

When the SIRIUS mode is switched to another mode, or when the power is turned off, the present channel which is being received is stored as the last channel.

Channel up

Turn the manual tuning dial to the right or press the seek up button (⏭).

Channel down

Turn the manual tuning dial to the left or press the seek down button (⏮).

NOTE
The channel is continuously switched to the next or previous channel while the seek tuning button (⏭ ,⏮) is continuously pressed.

Unsubscribed channel

When a channel which has been preset becomes unsubscribed or the current channel being listened to becomes unsubscribed, the following is displayed:
"Call 888-539-SIRIUS"
"to subscribe"

NOTE
When the subscription contract is canceled, all of the channels including channel 184 appear as unsubscribed.

Preset channel programming

1. Select the desired channel to be programmed.
2. Long-press any of the preset on-screen buttons.

NOTE
Six stations can be stored in each bank, SIRIUS1, SIRIUS2 and SIRIUS3 for convenient access to your favorite stations.

Preset channel call-up

Touch the preset on-screen button for the channel which you want to select.

NOTE
In the initial setting, all channels are preset to 184.

Selection from channel list

Receivable channels can be displayed on the channel list screen. You can easily select the channel you want to listen from the list. Each category can be also displayed.

1. Touch the [Channel List] on-screen button.
2. Touch the channel you want to listen from the list.

NOTE
Currently available channels (including parental locked channels) are all displayed in the list.

(Select from category list)

1. Touch the [Change Genre] on-screen button on the channel list screen.
2. Touch the category name which you want to select from the list.

NOTE
A category can be set only when a channel which belongs to a category is being received.

Scan tuning

Touch the Scan on-screen button to automatically sample stations. Scanning stops at each station for about five seconds.
To hold a station, touch the Scan on-screen button again during this interval.

NOTE
Unsubscribed channels, invalid channels, parental lock channels and channel 0 are not subject to the scan, therefore these channels will skip automatically.

Channel number, channel name, category name, artist name, song titles and information display

The information regarding the channel which is currently being received is displayed.

NOTE
If channels have not been subscribed to or parental locked, the channel name, category name, artist name, song title and information is not displayed.

Display scroll

If a whole title cannot be displayed at one time, touch the ▷ on-screen button on the right side of the title. When the last character is displayed, touch the ▷ on-screen button to display the first character of the title.

NOTE
The ▷ on-screen button is displayed only if a whole title cannot be displayed at one time.

Instant replay

This function allows you to rewind and replay the program that you were previously or are currently listening to.

When the ⏮ on-screen button is touched, playback starts from the beginning of the current program.
When the ⏮ on-screen button is touched twice, playback starts from the beginning of the previous program.
Touch and hold the ⏮ on-screen button to reverse the program while the button is being pressed.
When the ⏭ on-screen button is touched, playback starts from the beginning of the next program.
When the ⏭ on-screen button is touched while the last program is being played, the instant replay mode is canceled.
Touch and hold the ⏭ on-screen button to fast-forward the program while the button is being pressed.
When touching and holding the button until the end of the program, the instant replay mode is canceled.

Instant replay (PAUSE)

If the ▶/II on-screen button is touched, instant replay mode is turned on in a paused condition (PAUSE).
Touch the ▶/II on-screen button again to resume playback from the point at which it was paused.

Parental lock

Parental lock, parental unlock, parental lock code change, and parental lock code reset can be set.

NOTE

- *Touch the* [Cancel] *on-screen button during all the settings to return to the previous display.*
- *Touch the* [←] *on-screen button during the code and master code input to delete an input number.*
- *If only a four-digit code or master code is input, "Done" can be selected.*
- *If the registered code has been forgotten, reset the code in "Initialize Parental Code" to [0000].*

Parental lock

If a channel is locked, the channel is muted.

1. Turn the manual tuning dial to select the desired channel.
2. Touch the [Parental Lockout] on-screen button to display the settings screen.
3. Touch the [Current Channel] on-screen button to display the parental lock settings screen.
4. "Input Parental Code" is displayed, and input of the registered code is possible. To enter a number, use the numerical keypad.
5. After inputting the four digits, touch the [Done ✓] on-screen button to confirm the four digits.
6. If the four digits match the registered code, "Channel XXX locked" appears and mute is turned on. If they do not match the registered code, "Wrong code" appears and then the display returns to "Input Parental Code".

Parental unlock

Channels locked using the parental lock function can be unlocked.

1. Select a channel to be unlocked by turning the manual tuning dial.
2. Touch the [Parental Lockout] on-screen button to display the settings screen.
3. Touch the [Current Channel] on-screen button to display the parental unlock settings screen.
4. "Input Parental Code" is displayed, and input of the registered code is possible. To enter a number, use the numerical keypad.
5. After inputting the four digits, touch the [Done ✓] on-screen button to confirm the four digits.
6. If the four digits match the registered code, "Channel XXX unlocked" appears and mute is canceled. If they do not match the registered code, "Wrong code" appears and then the display returns to "Input Parental Code".

Parental-lock code change

When changing the code, the new code is input after the previous one is input first.

1. Touch the [Parental Lockout] on-screen button to display the settings screen.
2. Touch the [Change parental code] on-screen button to display the code change screen.
3. "Enter Current Code" is displayed, and input of the registered code is possible. To enter a number, use the numerical keypad.

4. After inputting the four digits, touch the Done on-screen button to confirm the four digits.
5. If the four digits match the registered code, “Enter New Code” is displayed. If they do not match the registered code, “Wrong code” appears and then the display returns to “Enter Current Code”. To enter a number, use the numerical keypad.
6. After inputting the four digits, touch the Done on-screen button to confirm the four digits.
7. “Code changed” appears to indicate that the new code input has been completed.
8. The display returns to its normal display.

NOTE

Channels locked before changing the code remain after changing the code. To unlock a channel, input the changed code.

Parental-lock code reset

If the registered code has been forgotten, reset the code to the default [0000] code.

1. Touch the Parental Lockout on-screen button to display the settings screen.
2. Touch the Initialize Parental Code on-screen button to display the code initial screen.
3. “Enter Master Code” is displayed, and input of the registered code is possible. To enter a number, use the numerical keypad.

NOTE

Master code:
The Master Code is used to initialize or re-initialize the code in the event that the code is not set to [0000] and/or the personalized code is not known. The initialization process resets the code to [0000]. The master code can potentially defeat the intent of the security of the parental lock if it is located by persons not authorized by the owner to access certain channels.
SIRIUS Satellite Radio Master Code: [0913]

4. After inputting the four digits, touch the Done on-screen button to confirm the four digits.
5. If the four digits match the master code, “Code initialized” appears. If they do not match the master code, “Wrong code” appears and the display returns to “Enter Master Code”.
6. The code returns to the default [0000] code.

Seek alert

The song title and artist name for the song currently being listened to, and team names at the sports game currently being listened to can be recorded as favorites. The user is notified when a program begins which has favorites-related information recorded.

Selection from seek alert program list

Select the station you want to listen to from the list to receive the program. Touch the Back on-screen button to return to the receiving screen.

Storing songs, artists, and sports team names

NOTE

- *A maximum of 10 songs, artists, and sports team names each can be stored.*
- *If the song title, artist name, sports team name cannot be displayed, "No available items for this program" is displayed.*
- *Even if the song title, and artist name are displayed in the main screen, it may not be possible to record information for old songs.*
- *If a song name is stored, the song seek function is turned on.*
- *If an artist name is stored, the artist seek function is turned on.*
- *If a sports team name is stored, the game alert function is turned on.*

1. Touch the [Seek Alert] on-screen button to display the current song and artist names currently being received. The sports team name is displayed while the sports program is being received.
2. Select the item you want to store from song title, artist name and sports team name.
3. "XXXXX (song, artist, sports team name) stored" is displayed.

NOTE

If there is not enough available storage space, "Song Memory Full" or "Artist Memory Full" or "Team Memory Full" and "Delete one to store new one" are displayed. Delete from the list.

Seek alert setting

On or off switching to song seek, artist seek, or game alert function, and deletion of stored information can be performed. Touch the [Seek Alert] on-screen button and the [Seek Alert Settings] on-screen button. Touch the button you want to change from [Song], [Artist], or [Team].

(On or off switching)

Touch the [Song Seek], [Artist Seek], and [Game Alert] on-screen button.

(Deletion)

1. Select song title, artist name, or sports team name that you want to delete from the list.
2. Touch the [Yes] on-screen button to display "XXXXX (song, artist, sports team name) deleted".

MEMO

▼Operating the Compact Disc (CD) Player

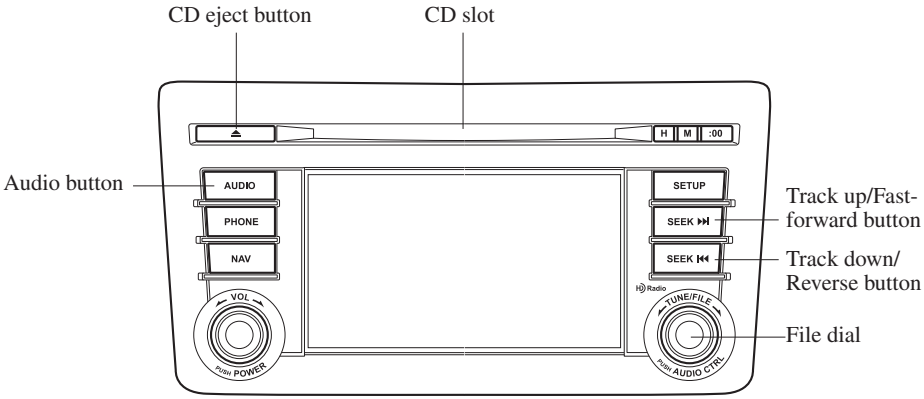

Type	Playable data
Music/MP3/WMA/ AAC CD player	• Music data (CD-DA) • MP3/WMA/AAC file

NOTE

If a disc has both music data (CD-DA) and MP3/WMA/AAC files, playback of the two or three file types differs depending on how the disc was recorded.

Inserting the CD

Insert the CD into the slot, label-side up. The auto-loading mechanism will set the CD and begin play.

NOTE

There will be a short lapse before play begins while the player reads the digital signals on the CD.

Ejecting the CD

Press the CD eject button (⏏) to eject the CD.

Playback

Press the audio button (AUDIO) or CD on-screen tab with a CD inserted.

Pause

To pause playback, touch the ▶/II on-screen button.
Touch the ▶/II on-screen button during a pause to cancel it.

Fast-forward/Reverse

Operations using audio panel

Press and hold the fast-forward button (⏭) to advance through a track at high speed.
Press and hold the reverse button (⏮) to reverse through a track at high speed.

Operations on screen

Touch and hold the ⏭ on-screen button to advance through a track at high speed.
Touch and hold the ⏮ on-screen button to reverse through a track at high speed.

Track search

Operations using audio panel

Press the track up button (⏭) or turn the file dial clockwise once to skip forward to the beginning of the next track.
Press the track down button (⏮) or turn the file dial counterclockwise within a few seconds after playback begins to track down to the beginning of the previous track.
Press the track down button (⏮) or turn the file dial counterclockwise after a few seconds have elapsed to start playback from the beginning of the current track.

Operations on screen

Touch the ⏭ on-screen button once to skip forward to the beginning of the next track.
Touch the ⏮ on-screen button within a few seconds after playback begins to track down to the beginning of the previous track.
Touch the ⏮ on-screen button after a few seconds have elapsed to start playback from the beginning of the current track.

Displaying file list

The desired file list in the CD can be viewed.

During music CD playback

Touch the Track List on-screen button to display the track list in the CD.

During MP3/WMA/AAC CD playback

(Viewing file list in desired folder)

1. Touch the Folder List on-screen button to display the folder list in the CD.
2. Touch the folder which you want to select.

(Viewing file list of current folder)

Touch the Current Folder on-screen button.

Selecting file/track

Select the file/track you want to play.

During music CD playback

1. Touch the Track List on-screen button to display the track list in the CD.
2. Touch the track you want to play.

During MP3/WMA/AAC CD playback

NOTE
Press the ↑ on-screen button on the file list screen to display the list of folders.

(Selection from all folders in CD)

1. When the Folder List on-screen button is touched, the folder list in the CD is displayed.
2. Select the folder name from the displayed list.
3. The files in the selected folder are displayed.
4. Select the file you want to play.

(Selection from inside folder in which a song is currently being played)

1. Press the Current Folder on-screen button to select the song list.
2. Touch the song you want to listen to.

Music scan

During music CD playback

This function scans the titles on a CD and plays 10 seconds of each song to aid you in finding a song you want to listen to.

1. Touch the Scan on-screen button during playback to play 10 seconds of each subsequent track starting from the next song.
2. Touch the Scan on-screen button during playback of the song you want to listen to and continue the playback from that point.

During MP3/WMA/AAC CD playback

This function scans the titles in a folder currently being played and plays 10 seconds of each song to aid you in finding a song you want to listen to.

1. Touch the Scan on-screen button during playback to play 10 seconds of each subsequent track starting from the next song.
2. Touch the Scan on-screen button during playback of the song you want to listen to and continue the playback from that point.

NOTE

- *If the unit is left in scan, normal playback will resume where scan was selected.*
- *If all the tracks are scanned, the unit will resume normal playback.*

Repeat playback

During music CD playback

Touch the Repeat on-screen button during playback to play the song currently being played repeatedly.“♫ ” is displayed during playback.
Touch the Repeat on-screen button while “♫ ” is displayed to cancel.

During MP3/WMA/AAC CD playback

(Track repeat)
Touch the Repeat on-screen button to play the song during playback repeatedly. “♫ ” is displayed during playback.
Touch the Repeat on-screen button two times while “♫ ” is displayed to cancel.
(Folder repeat)
Touch the Repeat on-screen button two times to play the songs in the folder repeatedly. “🗀 ” is displayed during playback.
Touch the Repeat on-screen button while “🗀 ” is displayed to cancel.

Shuffle playback

During music CD playback

Touch the Shuffle on-screen button during playback to play the songs in the CD shuffle. “🗀 ” is displayed during playback.
Touch the Shuffle on-screen button while “🗀 ” is displayed to cancel.

During MP3/WMA/AAC CD playback

(Folder shuffle)
Touch the Shuffle on-screen button during playback to play the songs in the folder shuffle. “🗀 ” is displayed during playback.
Touch the Shuffle on-screen button two times while “🗀 ” is displayed to cancel.

(CD shuffle)
Touch the Shuffle on-screen button two times during playback to play the songs in the CD shuffle. "" is displayed during playback.
Touch the Shuffle on-screen button while "" is displayed to cancel.

Display scroll

If a whole title cannot be displayed at one time, touch the ▷ on-screen button on the right side of the title. When the last character is displayed, touch the ▷ on-screen button to display the first character of the title.

NOTE

- *The ▷ on-screen button is displayed only if a whole title cannot be displayed at one time.*
- *The information viewable in the display is only CD information (such as artist name, song title) which has been recorded to the CD.*
- *This unit cannot display some characters. Characters which cannot be displayed are indicated by an asterisk (✱).*
- *The number of characters which can be displayed is restricted.*

Message Display

If "CD Error" is displayed, it means that there is some CD malfunction. Check the CD for damage, dirt, or smudges, and then properly reinsert. If the message appears again, take the unit to an Authorized Mazda Dealer for service.

▼Operating the Auxiliary jack/ USB port

Without auxiliary jack

Audio can be played from the vehicle audio device by connecting USB device or an iPod to the USB port.
Refer to AUX/USB/iPod Mode on page 6-52.

With auxiliary jack

Audio can be heard from the vehicle's speakers by connecting a commercially-available portable audio unit to the auxiliary jack.
Use a commercially-available, non-impedance (3.5ϕ) stereo mini plug cable. Contact an Authorized Mazda Dealer for details.
In addition, audio can be played from the vehicle audio device by connecting a USB device or an iPod to the USB port.
Refer to AUX/USB/iPod Mode on page 6-52.

▼Error Indications

If you see an error indication on the display, find the cause in the chart. If you cannot clear the error indication, take the vehicle to an Authorized Mazda Dealer.

Indication	Cause	Solution
CD Error	CD is inserted upside down	Insert the CD properly. If the error indication continues to display, consult an Authorized Mazda Dealer.
	CD is defective	Insert another CD properly. If the error indication continues to display, consult an Authorized Mazda Dealer.

▼Setup

You can customize settings in the setup display as follows:

Display

Refer to Power/Volume/Display/Sound Controls on page 6-30.

Sound

Refer to Power/Volume/Display/Sound Controls on page 6-30.

Language

1. Press the setup button (SETUP).
2. Touch the Language on-screen tab to display the language setting screen.
3. Touch the desired language from the list.
4. Touch the OK on-screen button.

NOTE
Only the available languages are displayed.

Audio Control Switch Operation

When the audio unit is turned on, operation of the audio unit from the steering wheel is possible.

NOTE
Because the audio unit will be turned off under the following conditions, the switches will be inoperable.
- *When the ignition is switched off.*
- *When the power button on the audio unit is pressed and the audio unit is turned off.*

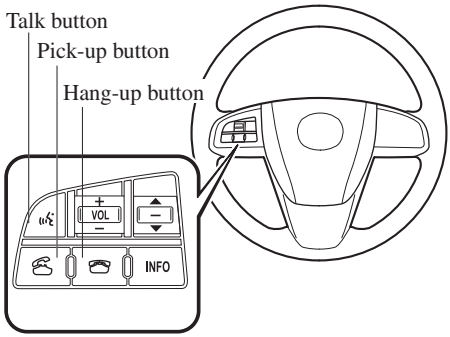

NOTE
- *The talk button, pick-up button, and hang-up button are operable with the audio unit turned off.*
- *Mazda has installed this system to prevent distraction while driving the vehicle and using audio controls on the dashboard. Always make safe driving your first priority.*

▼Adjusting the Volume

To increase the volume, press up the volume switch.

To decrease the volume, press down the volume switch.

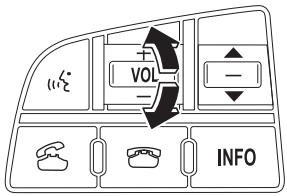

▼Seek Switch

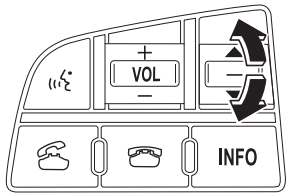

When listening to the radio or SIRIUS digital satellite radio

Press the seek switch up or down. The radio switches to the next/previous stored station in the order that it was stored (1—6).

(Radio)
Press and hold the seek switch in the up or down position to seek all usable stations at a higher or lower frequency whether programmed or not.
(SIRIUS digital satellite radio)
Press and hold the seek switch in the up or down position to seek all usable stations at a higher or lower channel whether programmed or not.

When playing a CD, USB, iPod or BT audio

Press the seek switch up to skip to the next track.
Press the seek switch down to repeat the current track.
Press and hold the seek switch in the up or down position to continuously switch the tracks up or down.

AUX/USB/iPod Mode

Without auxiliary jack

Audio can be played from the vehicle audio device by connecting USB device or an iPod to the USB port.

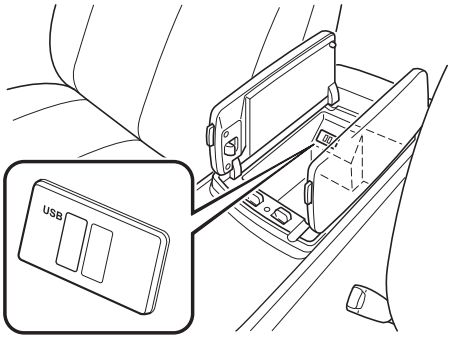

With auxiliary jack

Audio can be heard from the vehicle's speakers by connecting a commercially-available portable audio unit to the auxiliary jack.
A commercially-available, non-impedance (3.5ϕ) stereo mini plug cable is required. Contact an Authorized Mazda Dealer for details.
In addition, audio can be played from the vehicle audio device by connecting USB device or an iPod to the USB port.

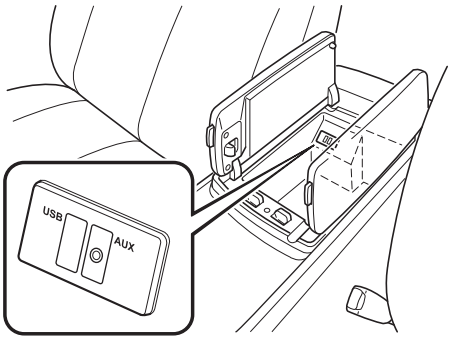

① How to use AUX mode ..... page 6-54
② How to use USB mode ..... page 6-56
③ How to use iPod mode ..... page 6-60

⚠ WARNING

Do not adjust the portable audio unit or a similar product while driving the vehicle:

Adjusting the portable audio unit or a similar product while driving the vehicle is dangerous as it could distract your attention from the vehicle operation which could lead to a serious accident. Always adjust the portable audio unit or a similar product while the vehicle is stopped.

⚠ CAUTION

- *Close the lid when the auxiliary jack*[*1]*/USB port is not in use to prevent foreign objects and liquids from penetrating the auxiliary jack*[*1]*/USB port.*
- *Depending on the portable audio device, noise may occur when the device is connected to the vehicle accessory socket. (If noise occurs, do not use the accessory socket.)*

**1 With auxiliary jack*

NOTE

- *Before using the auxiliary jack*[*1]*/USB port, refer to the instruction manual for the portable audio device.*
- ***(With auxiliary jack)***
  Use a commercially-available, non-impedance (3.5ϕ) stereo mini plug for connecting the portable audio unit to the auxiliary jack. Before using the auxiliary jack, read the manufacturer's instructions for connecting a portable audio unit to the auxiliary jack.
- *To prevent discharging of the battery, do not use the auxiliary input for long periods with the engine off or idling.*
- *When connecting a device to the auxiliary jack*[*1] *or USB port, noise may occur depending on the connected device. If the device is connected to the vehicle's accessory socket, the noise can be reduced by unplugging it from the accessory socket.*

**1 With auxiliary jack*

▼How to connect USB port/ Auxiliary jack

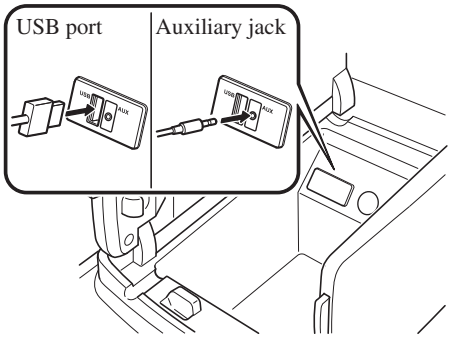

Connecting a device

1. Open the console lid.
2. Connect the device plug to the USB port.

Connecting with connector cable

1. Open the console lid.
2. Pass the connection plug cord through the cutout of the console and insert the plug into the auxiliary jack.

⚠ WARNING

Do not allow the connection plug cord to get tangled with the parking brake or the shift lever:

Allowing the plug cord to become tangled with the parking brake or the shift lever is dangerous as it could interfere with driving, resulting in an accident.

⚠ CAUTION

Do not place objects or apply force to the auxiliary jack/USB port with the plug connected.

NOTE

- *Insert the plug to the auxiliary jack*[*1]*/USB port securely.*
- *Insert or pull out the plug with the plug perpendicular to the auxiliary jack*[*1]*/USB port hole.*
- *Insert or remove the plug by holding its base.*

**1 With auxiliary jack*

▼How to use AUX mode

1. Switch the ignition to ACC or ON.
2. Press the power/volume dial to turn the audio system on.
3. Press the audio button (AUDIO) to display the audio screen.
4. Press the AUX on-screen tab to switch to the AUX mode.

NOTE

- *When the device is not connected to the auxiliary jack, the mode does not switch to the AUX mode.*
- *Set the volume of the portable audio unit to the maximum within the range that the sound does not become distorted, then adjust the volume using the power/volume dial.*
- *Audio adjustments other than audio volume can only be done using the portable audio device.*
- *If the connection plug is pulled out from the auxiliary jack while in AUX mode, noise may occur.*

MEMO

▼How to use USB mode

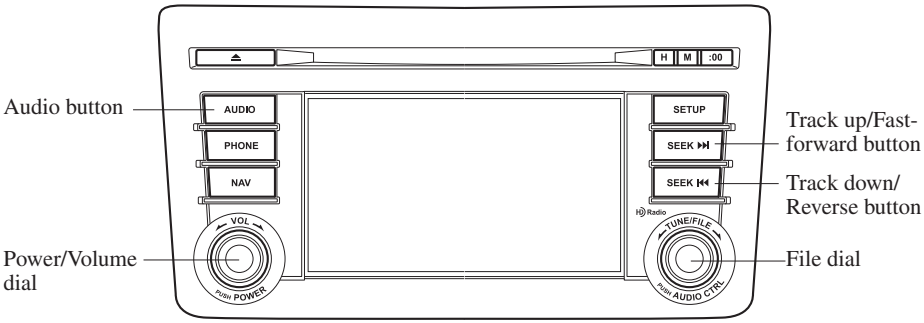

Type	Playable data
USB mode	MP3/WMA/AAC file

Playback

1. Switch the ignition to ACC or ON.
2. Press the power/volume dial to turn the audio system on.
3. Press the audio button (AUDIO) to display the audio screen.
4. Touch the USB on-screen tab to switch to USB mode and start playback.

NOTE

- *Some devices such as smart phones may require a setting change to allow USB operation.*
- *When a USB device is not connected to the USB port, the mode does not switch to the USB mode even if the* USB *on-screen tab is touched.*
- *Do not remove the USB device while in the USB mode. Otherwise, the data could be damaged.*

Pause

Touch the ▶/II on-screen button to pause playback.
Touch the ▶/II on-screen button while playback is paused to cancel the pause.

Fast-forward/Reverse

Operations using audio panel

Press and hold the fast-forward button (⏭) to advance through a track at high speed.
Press and hold the reverse button (⏮) to reverse through a track at high speed.

Operations on screen

Touch and hold the ⏭ on-screen button to advance through a track at high speed.
Touch and hold the ⏮ on-screen button to reverse through a track at high speed.

Track search

Operations using audio panel

Press the track up button (⏭) or turn the file dial clockwise once to skip forward to the beginning of the next track.
Press the track down button (⏮) or turn the file dial counterclockwise within a few seconds after playback begins to track down to the beginning of the previous track.
Press the track down button (⏮) or turn the file dial counterclockwise after a few seconds have elapsed to start playback from the beginning of the current track.

Operations on screen

Touch the ⏭ on-screen button once to skip forward to the beginning of the next track.
Touch the ⏮ on-screen button within a few seconds after playback begins to track down to the beginning of the previous track.
Touch the ⏮ on-screen button after a few seconds have elapsed to start playback from the beginning of the current track.

Displaying song list

The song list in the USB device can be viewed.

NOTE
The song list may not display depending on the conditions.

(Displaying optional list)

1. Touch the USB Menu on-screen button during playback.
2. Touch the category which you want to select. The record list or song list is displayed.

(Displaying a list being played)

Touch the Song List on-screen button.

NOTE
Press the ☎ on-screen button to display the upper list.

Selecting from list

Select the desired song to play.

1. Press the Song List on-screen button to select the song list.
2. Touch the song you want to listen to.

NOTE
The selected song list becomes the play list.

Repeat playback

Touch the Repeat on-screen button during playback. "♫ " is displayed during playback.
Touch the Repeat on-screen button two times while "♫ " is displayed to cancel.

Shuffle playback

(Shuffling songs in list being played)

Touch the Shuffle on-screen button during playback. "🗀 " is displayed during playback.

Touch the Shuffle on-screen button two times while "🗀 " is displayed to cancel.

(Shuffling album in list being played)

Touch the Shuffle on-screen button two times during playback. "🗀 " is displayed during playback.
Touch the Shuffle on-screen button while "🗀 " is displayed to cancel.

Text scroll

If a whole title cannot be displayed at one time, touch the ▷ on-screen button on the right side of each title. When the last character is displayed, touch the ▷ on-screen button to display the first character of the title.

NOTE

- *The ▷ on-screen button is displayed when the whole title is not displayed.*
- *The information (artist name, song name, album name) is displayed only when the USB device has information which can be displayed on the screen.*
- *This unit cannot display some characters. Characters which cannot be displayed are indicated by an asterisk (✱).*
- *The number of characters which can be displayed is restricted.*

Error Messages

If the message "USB Error" is displayed, it indicates that there is no playable file in the USB device or there is an error in the USB device. Verify that the content recorded in the USB device has MP3/WMA/AAC files and re-connect correctly. If the message reappears, have the unit checked by an Authorized Mazda Dealer.

MEMO

▼How to use iPod mode

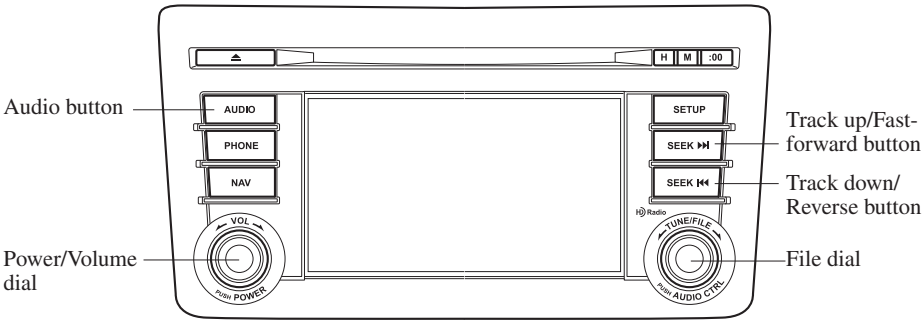

The connectable iPods are as follows:
- iPod: 5G
- iPod classic
- iPod nano: 1/2/3/4/5/6G
- iPod touch*1: 1/2/3/4G
- iPhone*1: iPhone/3G/3GS/4/4S
- iPad*1: 1st/2nd/3rd

*1 Only iPod function

NOTE

The iPod functions on the iPod cannot be operated while it is connected to the unit because the unit controls the iPod functions.

Playback

1. Switch the ignition to ACC or ON.
2. Press the power/volume dial to turn the audio system on.
3. Press the audio button (AUDIO) to display the audio screen.
4. Touch the iPod on-screen tab to switch to the iPod mode and start playback.

NOTE

- *When the iPod is connected to the USB port, the USB on-screen tab changes to the iPod on-screen tab.*
- *Do not remove the iPod while in the iPod mode. Otherwise, the data could be damaged.*

Pause

Touch the ▶/II on-screen button to pause playback. Touch the ▶/II on-screen button while playback is paused to cancel the pause.

Fast-forward/Reverse

Operations using audio panel

Press and hold the fast-forward button (⏭) to advance through a track at high speed.
Press and hold the reverse button (⏮) to reverse through a track at high speed.

Operations on screen

Touch and hold the ⏭ on-screen button to advance through a track at high speed.
Touch and hold the ⏮ on-screen button to reverse through a track at high speed.

Track search

Operations using audio panel

Press the track up button (⏭) or turn the file dial clockwise once to skip forward to the beginning of the next track.
Press the track down button (⏮) or turn the file dial counterclockwise within a few seconds (depends on iPod software version) after playback begins to track down to the beginning of the previous track.
Press the track down button (⏮) or turn the file dial counterclockwise after a few seconds (depends on iPod software version) have elapsed to start playback from the beginning of the current track.

Operations on screen

Touch the ⏭ on-screen button once to skip forward to the beginning of the next track.
Touch the ⏮ on-screen button within a few seconds (depends on iPod software version) after playback begins to track down to the beginning of the previous track.
Touch the ⏮ on-screen button after a few seconds (depends on iPod software version) have elapsed to start playback from the beginning of the current track.

Displaying song list

The song list in the iPod can be viewed.

NOTE
The song list may not display depending on the conditions.

(Displaying optional list)

1. Touch the iPod Menu on-screen button during playback.
2. Touch the category which you want to select. The record list or song list is displayed.

(Displaying a list being played)

Touch the Song List on-screen button.

NOTE
Press the ☎ on-screen button to display the upper list.

Selecting from list

Select the desired song to play.

1. Press the Song List on-screen button to select the song list.
2. Touch the song you want to listen to.

NOTE
The selected song list becomes the play list.

Repeat playback

Touch the Repeat on-screen button during playback. "♫ " is displayed during playback.
Touch the Repeat on-screen button two times while "♫ " is displayed to cancel.

Shuffle playback

(Shuffling songs in list being played)

Touch the Shuffle on-screen button during playback. "🗀 " is displayed during playback.
Touch the Shuffle on-screen button two times while "🗀 " is displayed to cancel.

(Shuffling album in list being played)

Touch the Shuffle on-screen button two times during playback. "🗀 " is displayed during playback.
Touch the Shuffle on-screen button while "🗀 " is displayed to cancel.

NOTE

The track number being shuffle played is in the order of the iPod shuffle table.

Text scroll

If a whole title cannot be displayed at one time, touch the ▷ on-screen button on the right side of the title to display the whole title. When the last character is displayed, touch the ▷ on-screen button to display the first character of the title.

NOTE

- *The ▷ on-screen button is displayed when the whole title is not displayed.*
- *The information (artist name, music name) is displayed only when the iPod has information which can be displayed on the screen.*
- *This unit cannot display some characters. Characters which cannot be displayed are indicated by an asterisk (✱).*
- *The number of characters which can be displayed is restricted.*

Error Messages

If the message "iPod Error" is displayed, it indicates that there are no playable files in the iPod or there is a malfunction. Verify that the content recorded in the iPod has playable files and re-connect correctly. If the message reappears, have the unit checked by an Authorized Mazda Dealer.

▼Error Indications

If you see an error indication on the display, find the cause in the chart. If you cannot clear the error indication, take the vehicle to an Authorized Mazda Dealer.

Indication	Cause	Solution
USB Error	USB device malfunction	Verify that the content recorded in the USB device has MP3/WMA/AAC files and re-connect correctly. If the error indication continues to display, consult an Authorized Mazda Dealer.
iPod Error	iPod malfunction	Verify that the content recorded in the iPod has playable files and re-connect correctly. If the error indication continues to display, consult an Authorized Mazda Dealer.

Safety Certification

This CD player is made and tested to meet exacting safety standards. It meets FCC requirements and complies with safety performance standards of the U.S. Department of Health and Human Services.

⚠ CAUTION

- *This CD player should not be adjusted or repaired by anyone except qualified service personnel.*
  If servicing is required, contact an Authorized Mazda Dealer.
- *Use of controls or adjustments or performance of procedures other than those specified herein may result in hazardous laser exposure. Never operate the CD player with the top case of the unit removed.*
- *Changes or modifications not expressly approved by the party responsible for compliance could void the user's authority to operate this equipment.*

NOTE

For CD player section:
This device complies with part 15 of the FCC Rules. Operation is subject to the following two conditions: (1) This device may not cause harmful interference, and (2) this device must accept any interference received, including interference that may cause undesired operation.

NOTE

This equipment has been tested and found to comply with the limits for a Class B digital device, pursuant to part 15 of the FCC Rules. These limits are designed to provide reasonable protection against harmful interference in a residential installation. This equipment generates, uses, and can radiate radio frequency energy and, if not installed and used in accordance with the instructions, may cause harmful interference to radio communications. However, there is no guarantee that interference will not occur in a particular installation.

Rear Entertainment System*

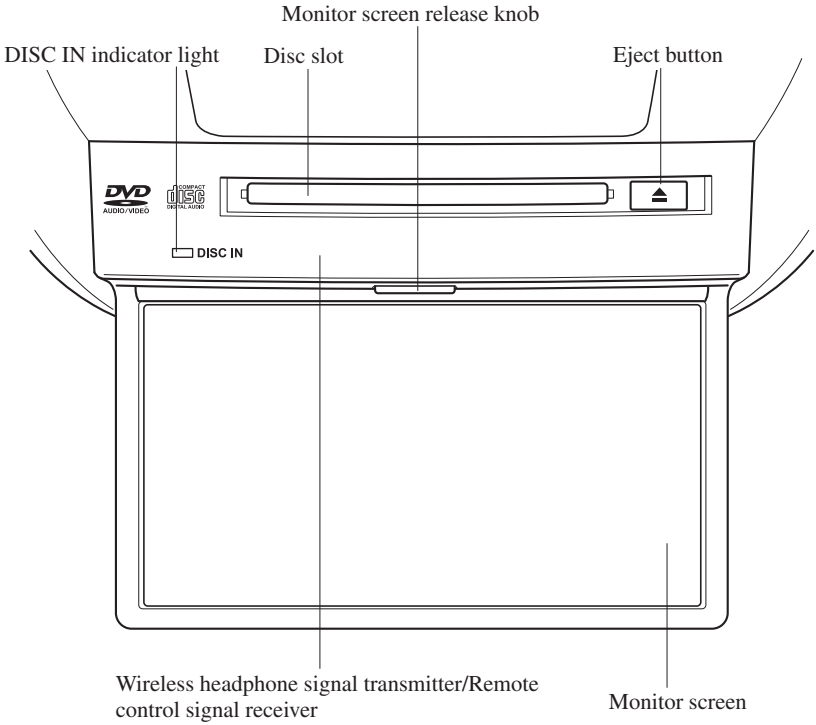

▼Rear Entertainment System Outline

The Rear Entertainment System has a 9.0-inch wide LCD, as well as DVD video, DVD audio, video CD, audio CD, and MP3/WMA CD playback functions. Moreover, the system is equipped with input terminals for video picture and audio sound, and AV equipment such as a video game player or a video camera can be connected and displayed on the monitor screen.

*Some models.

▼Proper Operation of Rear Entertainment System

For safe driving, read the following warnings and cautions before starting operation, and use the system properly.

⚠ WARNING

- *Do not disassemble or modify this unit.*
  It may cause an accident, fire, or electrical shock.
- *Do not use if there is a malfunction condition such as no screen image or sound.*
  It may cause an accident, fire, or electrical shock. Follow the procedures in "Symptoms and Actions" (page 6-114) and if the problem is not resolved, consult an Authorized Mazda Dealer.
- *Do not use if some problem has occurred.*
  If any problem occurs, such as a foreign material penetration, spilled liquid, smoking from internal burning, or other abnormal smells, stop operation immediately and consult an Authorized Mazda Dealer. If operation is continued, it may cause an accident, fire, or electrical shock.
- *Lower the volume to minimum before turning off the power.*
  If the volume is set high, loud sound will be produced when turning on the power, causing auditory problems or an accident.
- *Adjust the volume while driving so that ambient sound can be heard.*
  If the volume is too high and ambient sound cannot be heard while driving, driving operation could be obstructed causing an accident.
- *Do not leave the remote controller and the headphones unstowed.*
  If the remote controller and the headphone are not stowed, they could fall under the brake pedal during a sudden stop or while turning, which could obstruct driving operation and cause an accident.

⚠ CAUTION

- *Do not put foreign material into the disc slot.*
  It may cause a fire or malfunction.
- *Do not clean plastic finished parts with solvent such as benzene or thinner.*
  The parts may deform causing a fire or malfunction.

▼Operating Tips for Disc

Playable discs

DVD video, DVD audio[*1], video CD, audio CD, CD-R, CD-RW, DVD-R and DVD-RW can be played.

NOTE

It may not be possible to play DVD video, DVD audio, video CD, audio CD, and MP3/WMA CD according to the procedures indicated in these instructions if the playback conditions have been restricted by the producer.
Read the instruction manual accompanying the DVD video, video CD, DVD audio, audio CD.

Playable DVD	Recording method and disc size	Applicable digital sound
DVD video DVD videos bearing the following logo can be played.	• Region code must include “1” or “ALL”. • NTSC (National Television System Committee) recorded type. • 8 cm (3 in) or 12 cm (5 in) size	• Dolby digital • Linear PCM
DVD audio DVD audio bearing the following logo can be played.	8 cm (3 in) or 12 cm (5 in) size	• Linear PCM • Packed PCM
DVD-R and DVD-RW DVD-Rs and DVD-RWs bearing each of the following logos can be played.	8 cm (3 in) or 12 cm (5 in) size	—
Video CD, audio CD, CD-R, and CD-RW Video CDs, audio CDs, CD-Rs, and CD-RWs bearing each of the following logos can be played.	• Playback control function supported. • 8 cm (3 in) or 12 cm (5 in) size • MP3 recorded type.	—

*1: Stereo playback is produced.

Regarding digital sound

Dolby digital
Digital sound compression technology developed by Dolby Laboratories, Inc.
*Sound recorded using the dts method cannot be played.

Unplayable discs

- Discs not bearing the logo mark indicated in the above table.
- Discs not including “1” or “ALL” in region code.
- Discs recorded in other than NTSC (e.g. PAL or SECAM).
- DVD-ROM, DVD-RAM, DVD+ RW, CD-ROM, CDV, CD-G, CVD, VSD, SVCD, SACD, photo CDs, non-conventional discs (e.g. heart-shaped), and partially transparent discs.
- Discs recorded in CD-TEXT format.
- HD DVD and Blu-ray discs

Handling of discs

- Do not use non-conventional discs such as heart-shaped, octagonal discs, or discs with a memory portion that is transparent or translucent. The unit could be damaged.

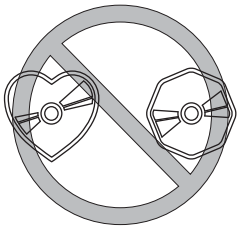

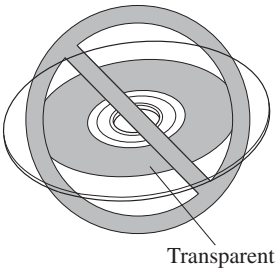

- When driving over uneven surfaces, the sound may jump.
- Be sure never to touch the signal surface when handling the discs. Pick up the discs by grasping the outer edge or the edge of the hole and the outer edge.
- Do not write on or attach labels, stickers or similar to discs.
- Defective (cracked or badly bent) discs should never be used.

- A new disc may have rough edges on its inner and outer perimeters. If a disc with rough edges is used, proper setting will not be possible and the unit will not play the disc. Remove the rough edges in advance by using a ball-point pen or pencil as shown below. To remove the rough edges, rub the side of the pen or pencil against the inner and outer perimeter of the discs.

Disc cleaning

Do not use record sprays, antistatic agents, or household spray cleaners. Volatile chemicals such as benzine and thinner can also damage the surface of the disc and must not be used. Anything that can damage, warp or fog plastic should never be used to clean discs.

Condensation

Immediately after turning on the heater when the vehicle is cold, the disc or optical components (prism and lens) in the unit may become clouded with condensation. At this time, the disc will eject immediately when placed in the unit. A clouded disc can be corrected simply by wiping it with a soft cloth. Clouded optical components will clear naturally in about an hour. Wait for normal operation to return before attempting to use the unit.

Operating tips for DVD video

Region code

The playback restriction area is set in a DVD video. The playback restriction area is indicated by a region code, and a DVD video can be played only in its indicated area. The region code for U.S.A. and Canada are “1”. DVD videos bearing region code including “1” or “ALL” on the package or the instruction manual can be played by this unit. The region code setting for this unit has been set to “1”.
DVD videos bearing any of the following logos on the package or instruction manual can be played.

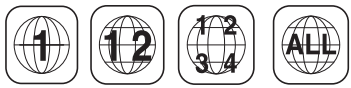

Playable DISC specification

CD-R and CD-RW including MP3/WMA files can be played with this unit. Discs which conform to the following formats can be played.

Name	Standard	Explanation
CD-R, CD-RW format	ISO9660	Level 1
		Level 2
	ISO9660 extension	Joliet
		Romeo
Multi-session	Supported	
Maximum hierarchy number	8 hierarchies (Including root)	
Maximum folder number	256 folders	
Maximum file number	512 files (Total capacity included in a disc.) Files other than MP3 or WMA are not included.)	

Operating tips for MP3

NOTE

Supply of this product only conveys a license for private, non-commercial use and does not convey a license nor imply any right to use this product in any commercial (i.e. revenue-generating) real time broadcasting (terrestrial, satellite, cable and/or any other media), broadcasting/streaming via the Internet, intranets and/or other networks or in other electronic content distribution systems, such as pay-audio or audio-on-demand applications. An independent license for such use is required. For details, please visit http://www.mp3licensing.com.

Playable MP3 file specification

Playable MP3 files are as follows:

Item		Content
Specification		MPEG1 AUDIO LAYER3
		MPEG2.5 AUDIO LAYER3
		MPEG2 AUDIO LAYER3
Sampling frequency	MPEG1	32, 44.1, 48kHz
	MPEG2	16, 22.05, 24kHz
Bit rate	MPEG1	32, 40, 48, 56, 64, 80, 96, 112, 128, 160, 192, 224, 256, 320 kbps
	MPEG2, 2.5	32, 40, 48, 56, 64, 80, 96, 112, 128, 144, 160 kbps
VBR (Variable Bit Rate)		Supported
Channel mode		Stereo, Joint stereo, Dual channel, Monaural
ID3 tag		Ver. 1.0, Ver. 1.1 title, artist name, album name

- This unit corresponds to MP3 files in which both header and data comply with the MP3 format.

- This unit corresponds to multi-session recorded disc playback at a maximum of 49 sessions.
- Some data on multi-session recorded discs cannot be played.
- Playback of discs with added sessions is possible.
- Packet Write recorded discs cannot be played.
- This unit does not correspond to MP3i (MP3 interactive), MP3 PRO, and RIFF-style MP3 formats.
- The maximum number of characters available for a file name is as follows, however, the displayable number of characters on this unit is limited.

	Maximum number of characters in a file name (including a separator "." and the three letters of the file extension)
ISO9660 level 1	12*
ISO9660 level 2	31*
Joliet extended format	64
Romeo extended format	128

* English one-byte characters (capitalized only) and underbar "_" are available.

MP3

⚠ CAUTION

This unit plays files with the (.mp3) file extension as a MP3 file. Do not use the MP3 file extension for files other than MP3 files. It may cause noise or a malfunction.

- In a MP3 file, the track name, artist name, album name and category name are recorded with data called "ID3-Tag", and the information can be displayed on the monitor.
- MP3 files which do not comply with the specific standard may not be played correctly or its file and folder name may not be displayed correctly.
- The file extension may not be provided depending on the computer operating system, version, software, or settings. In this case, add the file extension ".mp3" to the end of the file name, and then write the disc.

Playlist

This unit can play playlist files. Playlist is a function that allows free setting of the playback order of MP3 files. The file extension of a playlist file in which the order of playback is recorded is ". m3u" or ". pls".

Operating tips for WMA

WMA is short for Windows Media Audio and is the audio compression format used by Microsoft.
Audio data can be created and stored at a higher compression ratio than MP3.
*Microsoft and Window Media are registered trademarks of Microsoft Corporation U.S. in the United States and other countries.

Playable WMA file specification

CD-R and CD-RW including WMA files can be played with this unit. Discs which conform to the following formats can be played.
Playable WMA files are as follows:

Item		Content
Specification		Windows Media Audio Version7.0
Sampling frequency	Bit rate	22.05kHz . . . . 32 kbps
		32kHz. . . . . 48, 64 kbps
		44.1kHz . . . . . 48, 64, 80, 96, 128, 160, 192, 256, 320 kbps
		48kHz. . . . . 64, 96, 128, 160, 192 kbps
VBR (Variable Bit Rate)		Supported
Channel mode		Stereo/Monaural
WMA tag		Title, artist name, album name

WMA

⚠ CAUTION

This unit plays files with the (.wma) file extension as a WMA file. Do not use the WMA file extension for files other than WMA files. It may cause noise or a malfunction.

- In a WMA file, the track name, artist name, album name and category name are recorded with data called “WMA-Tag”, and the information can be displayed on the monitor.
- WMA files which do not comply with the specific standard may not be played correctly or its file and folder name may not be displayed correctly.
- The file extension may not be provided depending on the computer operating system, version, software, or settings. In this case, add the file extension “.wma” to the end of the file name, and then write the disc.

Operating tips for Dolby

Manufactured under license from Dolby Laboratories.
“Dolby”, “MLP Lossless”, and the double-D symbol are trademarks of Dolby Laboratories.

▼Operation Tips for Headphones

To listen to audio other than from the speakers of the Rear Entertainment System, it is necessary to use the wireless headphones that are included.
Specification

Item	Content
Transmission system	Infrared light
Modulation system	Frequency modulation
Carrier frequency	Right channel 2.8 MHz, left channel 2.3 MHz

Part Names

▼Rear Entertainment System Main Unit

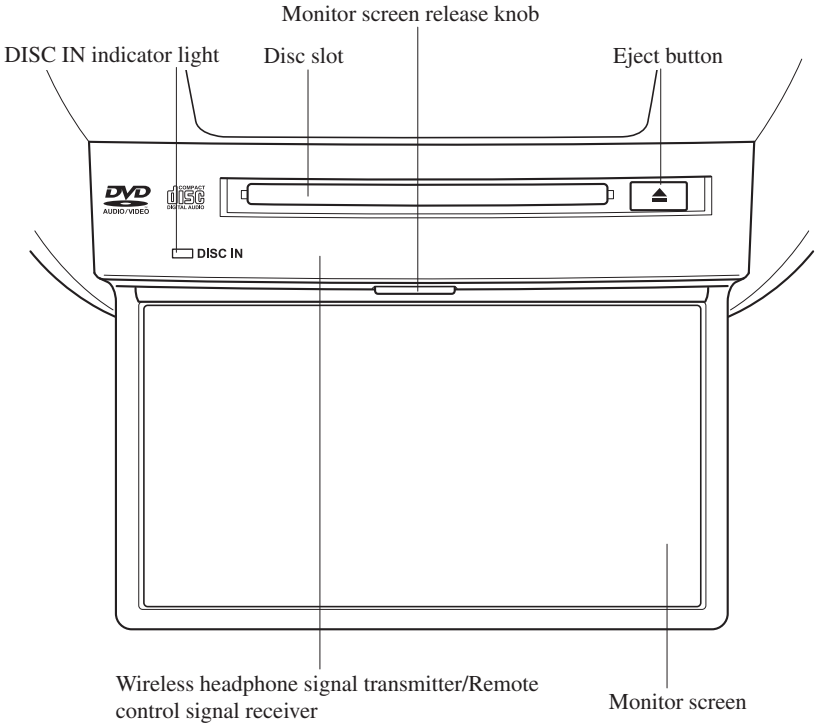

▼Remote Controller

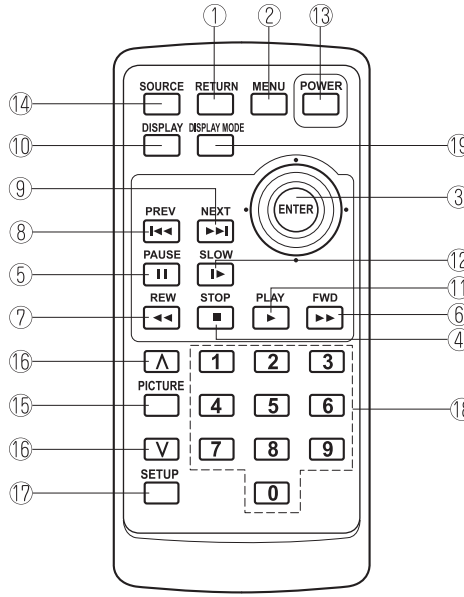

No.	Name	No.	Name
①	RETURN button	⑪	PLAY button
②	MENU button	⑫	Slow playback button
③	ENTER/Select button	⑬	POWER button
④	STOP button	⑭	SOURCE button
⑤	PAUSE button	⑮	Picture adjust mode button
⑥	Fast-forward button	⑯	Picture adjust button
⑦	Rewind button	⑰	SET UP button
⑧	PREVIOUS (Track down) button	⑱	Number keys
⑨	NEXT (Track up) button	⑲	DISPLAY MODE button
⑩	DISPLAY button		

▼Headphone

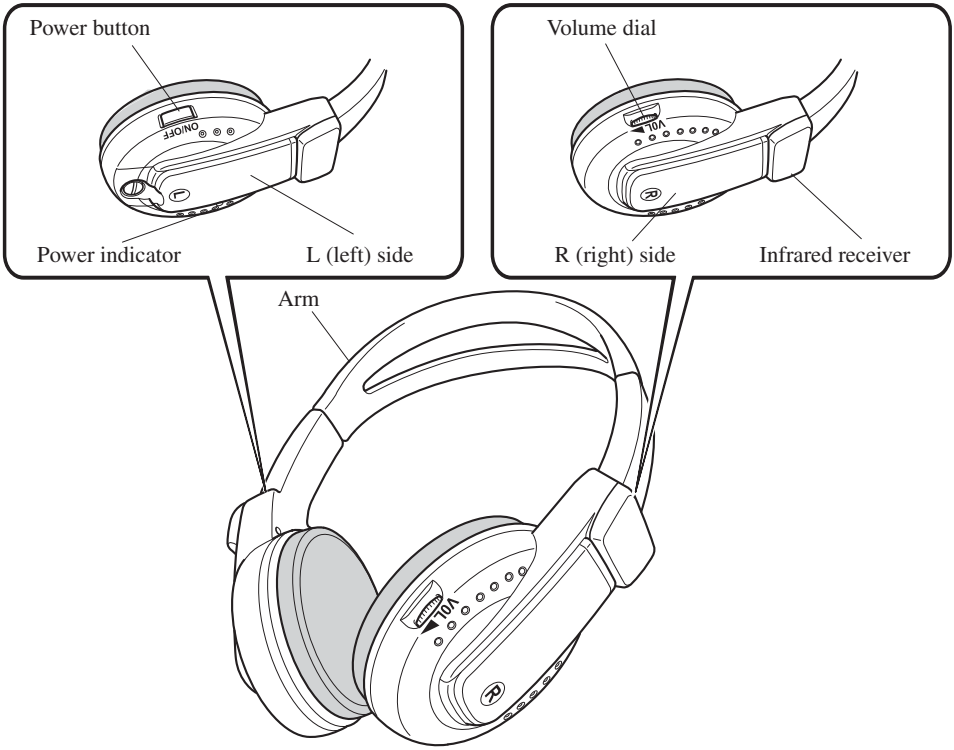
Power button
ON/OFF
Power indicator
L (left) side
Volume dial
VOL
R (right) side
Infrared receiver
Arm

Before Operation

▼Display Opening/Closing

⚠ CAUTION

- *Close the display while the Rear Entertainment System is not in use. If the display is left open, a passenger could be injured by hitting the display, or the display could be damaged.*
- *Do not press the monitor screen while opening the display. It may cause a malfunction.*

Opening the display

Press the monitor screen release knob and open the display until it is in the lock position.

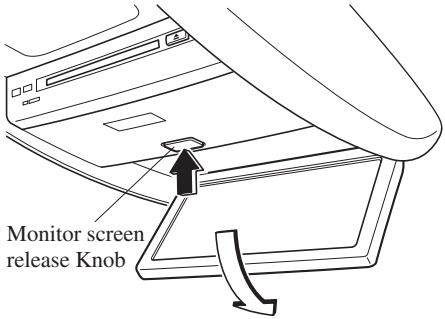

Closing the display

Close and press the display until a clicking sound can be heard.

NOTE

- *If the display is closed while the power is on, it automatically turns off.*
- *The display locks in two positions when opened to 100 or 120-degrees.*

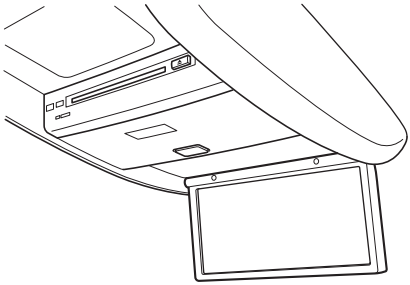

▼Disc Insertion/Ejection

⚠ CAUTION

If the signal surface of a disc is touched, it could cause the sound to skip. Pick up a disc by grasping the edge of the hole and the outer edge.

NOTE

When no disc is inserted, "No Disc" is displayed on the monitor.

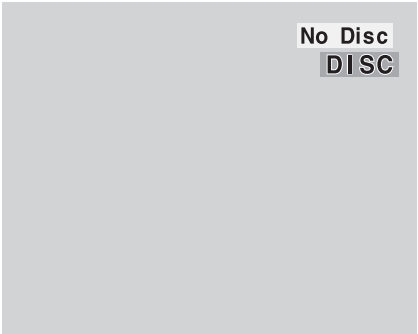

Inserting the disc

Insert the disc into the disc slot with the label-side up.

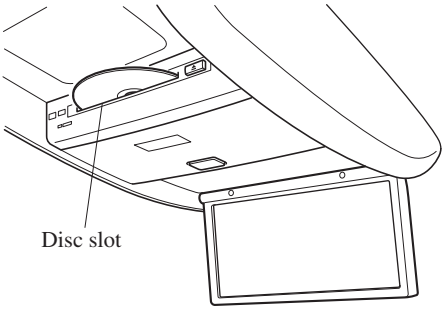

⚠ CAUTION

Insert the disc with its label-side (decorated side) facing upward. If the disc is inserted upside-down, it may cause a malfunction.

NOTE

If a disc is inserted while the Rear Entertainment System is turned off but the display is open, and when the ignition is switched to ACC or ON, the system automatically turns on and starts playback.

Ejecting the disc

Press the eject button to eject the disc.

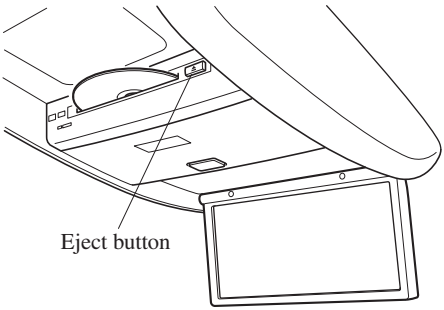

NOTE

- *When the eject button is pressed, the disc is ejected halfway.*
- *A disc can be ejected with the Rear Entertainment System turned off.*

▼Picture Adjustment

The brightness (BRIGHT), color adjustment (TINT), color density (COLOR), and contrast (CONTRAST) of the screen can be adjusted.
Press the picture adjust button (PICTURE) on the remote controller to change to the picture adjustment mode.
The picture mode changes in the order of BRIGHT →TINT →COLOR →CONTRAST →OFF each time the button is pressed in this mode.
Press the picture adjust button (∧) or (∨), positioned to top/bottom of the picture adjustment mode button (PICTURE), to adjust each picture mode.

NOTE

- *If the picture adjustment mode is on and no operation has been done for about 5 seconds, the mode is canceled automatically.*
- *If the picture is no longer adjustable by pressing the picture adjust button (∧) or (∨), it indicates that the adjustment value has reached the maximum/minimum value.*

Adjusting the brightness

1. Press the picture adjustment mode button (PICTURE) and select the BRIGHT mode.
2. Press the picture adjust button (∧) or (∨) to adjust.
   - Picture adjust button (∧): Brighten

- Picture adjust button (∨): Darken

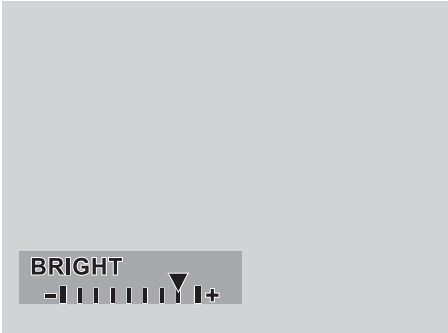

Adjusting the color adjustment

1. Press the picture adjustment mode button (PICTURE) and select the TINT mode.
2. Press the picture adjust button (∧) or (∨) to adjust.
   - Picture adjust button (∧): Green
   - Picture adjust button (∨): Red

Adjusting the color density

1. Press the picture adjustment mode button (PICTURE) and select the COLOR mode.
2. Press the picture adjust button (∧) or (∨) to adjust.
   - Picture adjust button (∧): Darken
   - Picture adjust button (∨): Lighten

Adjusting the contrast (definition)

1. Press the picture adjustment mode button (PICTURE) and select the CONTRAST mode.
2. Press the picture adjust button (∧) or (∨) to adjust.
   - Picture adjust button (∧): Higher
   - Picture adjust button (∨): Lower

▼Screen Size Setting

The size of the screen can be changed. Press the DISPLAY MODE button to set the desired screen size.
The screen size changes in the order of Full →Normal →Wide →Cinema each time the button is pressed.

Full screen
Image is displayed on the full screen.

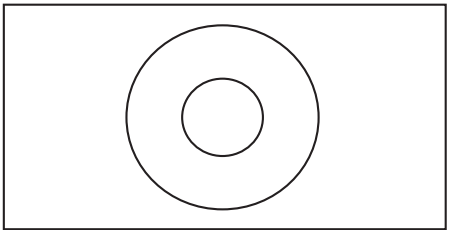

* A 16:9 screen ratio image is shown in the above figure.

Normal screen
A 4:3 screen ratio image is the standard display, and black bands appear on each side of the screen.

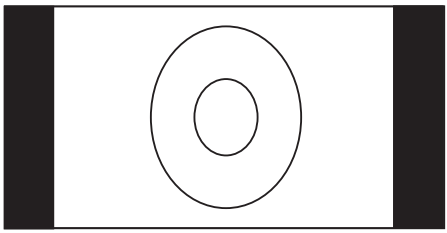

* A 16:9 screen ratio image is scaled to a 4:3 screen ratio.

Wide screen
The center part of the image is compressed toward the center, and the surrounding area is enlarged toward the edge.

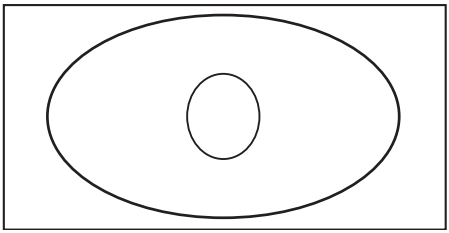

* A 16:9 screen ratio image is shown in the above figure.

Cinema screen
The image is enlarged upward and downward. A 4:3 and 16:9 screen ratio image are displayed with the upper/lower part of the image cut off.

NOTE
Because images are enlarged lengthwise for display, a horizontal streak may be seen, however, it does not indicate a malfunction.

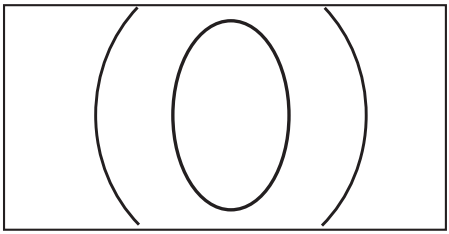

* A 16:9 screen ratio image is shown in the above figure.

NOTE
The display varies depending on the style of the image recorded on the disc.
Refer to the following table and set the screen size.

Image style	Recommendation
4:3	Normal or wide screen
16:9	Full screen
Letter box	Full or cinema screen

▼Display Off

Only sound, without image, can be played.
Press and hold the DISPLAY button (DISPLAY) on the remote controller.
“DISPLAY OFF” is displayed, and then image turns off.
Press any button on the remote controller to display the image.

▼Remote Controller

Operate the Rear Entertainment System with the remote controller except for disc insertion/ejection.

⚠ CAUTION

Do not apply excessive force to the remote controller or get it wet. Also, do not leave the remote controller in a place exposed to direct sunlight or high temperature. It could cause a malfunction.

NOTE

Operate the remote controller with it pointed to the disc slot of the unit. Signals may not be received depending of the angle.

Maintenance

Stow the remote controller in its case and put it in the seatback pocket of a front seat.
Place the remote controller into its case properly in the direction shown in the figure and stow it in the front seatback pocket.

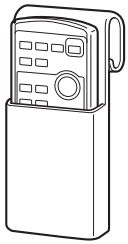

NOTE

If the remote controller is placed in the incorrect direction, abnormal noise or an operation error could result.

Using the remote controller

A battery has already been installed in the remote controller.
Remove the electrical leak-protection insulation sheet before using the remote controller.

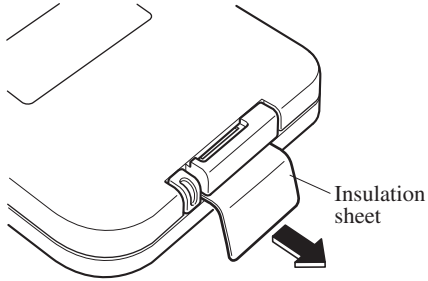

Replacing the battery

If the buttons on the remote controller are inoperable, or the operation range becomes narrow or unsteady, the battery may be dead.
Replace the battery using the following procedure.

Battery: CR2025 LITHIUM or equivalent (1)

1. Press the battery case tab in the direction indicated by the arrow using your thumbnail, and pull out the battery case.

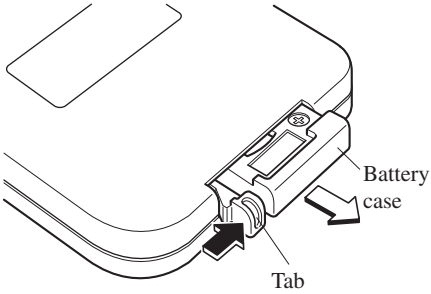

2. Remove the old battery and install a new one with the plus pole pointed up.

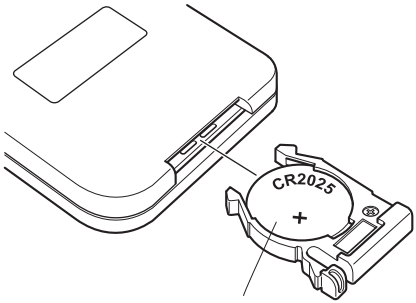

Battery (CR2025 LITHIUM or equivalent)

3. Press the battery case tab in the direction of the arrow until a click sound is heard.

NOTE

If the remote controller is inoperable even after the batteries are replaced, consult an Authorized Mazda Dealer.

⚠ CAUTION

- *Install the battery with the correct pole pointing in the correct direction. Battery leakage could occur if they are not installed correctly.*
- *When replacing the batteries, be careful not to bend the electrical terminals or get oil on them. Also, be careful not to get dirt in the remote controller as it could be damaged.*

Sound Output

▼Sound Output from Vehicle Speakers

Press the audio button (AUDIO) and AUX on-screen tab. “AUX” is displayed on the audio display and it changes to the Rear Entertainment System sound.
Sound/Music being played by the Rear Entertainment System can be heard from the vehicle speakers.
Adjust the volume with the dial on the audio unit.

▼Using the Headphone Speakers

⚠ CAUTION

- *For safety reasons, the driver should never wear the headphones while driving. Not being able to hear sound outside of the vehicle could result in a serious accident.*
- *Use the headphones with the volume set at moderate level. Listening at an excessive volume level for extended periods of time will have an adverse effect on your hearing ability.*
- *If the headphone arms are spread excessively is could result in damage.*
- *Do not apply excessive force to the headphones or get them wet. Also, do not leave the headphones in a place exposed to direct sunlight or high temperature. It could cause a malfunction.*

NOTE

- *To listen to audio other than from the speakers of the rear entertainment system, it is necessary to use the wireless headphones that are included. For headphone specification, refer to “Operation Tips for Headphones” (page 6-73).*
- *When the headphones are not in use, turn them off.*
- *If there is no sound produced from a signal for 3 minutes or longer after the headphone power is turned on, or there is no signal reception, the headphone power turns off automatically.*
- *If the headphones are continuously used for 4 hours or more after the sound signal is received, the headphone power turns off automatically.*

Rear Entertainment System

The acceptable range for signals (infrared rays) from the Rear Entertainment System is as follows:

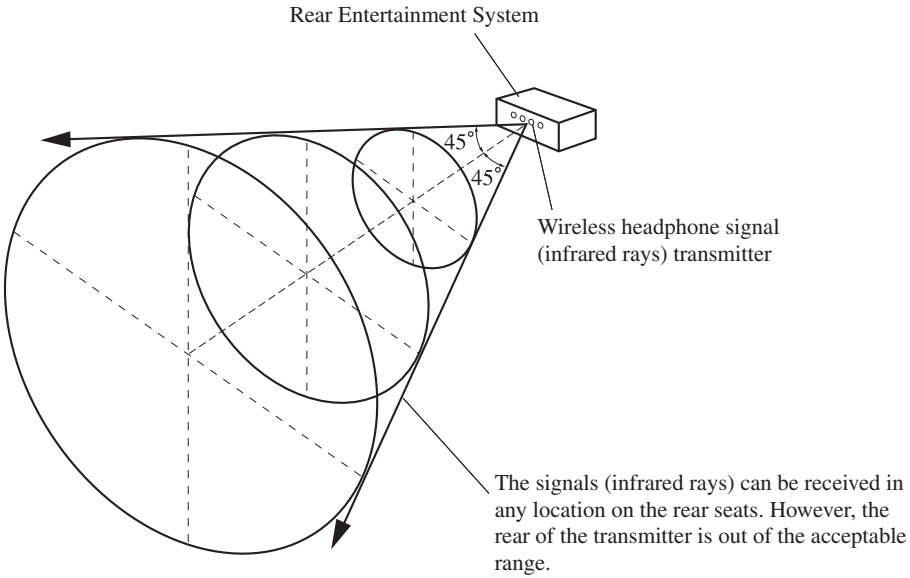

A wireless headphone can be used in any position on the rear seats, however, the sound may skip under the following conditions because the acceptable range varies or the signals are blocked.

- When affected by intense light such as direct sunshine.
- When the wireless headphone receiver does not point to the Rear Entertainment System transmitter.
- When the signal is blocked by an obstruction such as the seat.

Replacing the battery

1. Remove the screw using a coin or equivalent, and remove the cover. Remove the batteries.

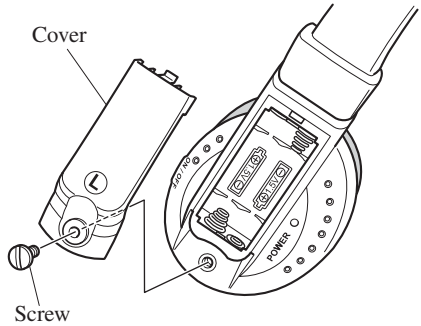

2. Insert two AAA-size batteries. Match the + polarity of the batteries with the + and − marks in the battery case.

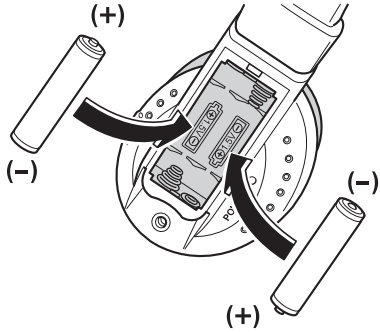

3. Install the cover.
4. Install the screw.

NOTE

Battery life (reference)
Manganese batteries: About 20 hours
Alkaline batteries: About 40 hours
The battery life is indicated as a reference and does not provide any guarantees. The battery life varies depending on usage conditions (volume, surrounding environment).

CAUTION

- *If the battery power is depleted the headphones will not operate properly. If any of the following occurs, replace the batteries.*
  - *The power indicator does not illuminate even when the power is turned on.*
  - *Noise is mixed with the sound.*
  - *The reception range narrows.*
- *Periodically inspect the batteries for leakage.*
- *If the headphones are not to be used for an extended period, remove the batteries.*
- *Be careful not to allow the battery case screw to become loose.*
- *Install the batteries with the (+)/(−) poles correctly positioned. Battery leakage could occur if they are not installed correctly.*
- *When replacing the batteries, be careful not to bend the electrical terminals or get oil on them.*
- *Be careful not to allow dirt to get into the headphones as it could damage them.*

The following points regarding the battery must be observed.
If the batteries are not handled properly, it could result in a headphone malfunction.

- *Do not use rechargeable batteries.*
- *When replacing the batteries, replace both batteries at the same time. Do not use a new battery and an old battery, or the different types of battery.*

Rear Entertainment System Functions

▼Mode

The Rear Entertainment System has Disc and AUX modes.

Mode	Function	Page
Disc mode	DVD video, video CD, DVD audio, and audio CD can be played.	6-88
AUX (Auxiliary) mode *	AV equipment with output terminals for image and sound, such as a video game player and a video camera, can be used.	6-102

* Auxiliary terminals in which AV equipment can be connected are equipped.
Refer to Auxiliary Terminals and Power Outlet on page 6-102.

Mode change

Press the SOURCE button. The mode changes between Disc and AUX.

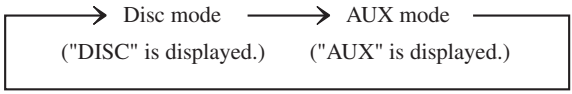

DVD video, DVD audio, Video CD, Audio CD and MP3/WMA CD Playback (Disc Mode)

DVD video, DVD audio, Video CD, Audio CD, and MP3/WMA CD can be played in the Disc mode.

⚠ CAUTION

For safe driving, adjust the volume while driving so that ambient sound can be heard.

NOTE

- *Do not use the Rear Entertainment System for a long period with the engine off. The vehicle battery could run down.*
- *To listen to the Rear Entertainment System sound from the vehicle speakers, change the audio sound to the Rear Entertainment System sound.*
  Refer to Sound Output from Vehicle Speakers on page 6-83.
- *To listen to audio other than from the speakers of the rear entertainment system, it is necessary to use the wireless headphones that are included. For headphone specification, refer to "Operation Tips for Headphones" (page 6-73).*
- *The cooling fan of this unit may activate if the temperature of the unit is high, however, this does not indicate a malfunction.*

▼Basic Operation

Power ON/OFF

Turning on the power

The Rear Entertainment System automatically turns on when any of the following operations are done with the ignition switched to ACC or ON.

- The display is open and a disc is inserted.
- The POWER button on the remote controller is pressed.

Turning off

The Rear Entertainment System turns off when any of the following operations are done.

- The POWER button on the remote controller is pressed.
- The ignition is switched off.
- The display is closed.

Playback

The top menu or disc menu may be displayed on the monitor screen when a disc is played. From these menus, the disc functions can be performed.
Refer to Assist Functions (DVD video, DVD audio, video CD and audio CD) on page 6-91.

NOTE

- *For some discs, the top menu or disc menu may be displayed automatically after playback.*
- *Refer to the instruction manual attached to the disc for the top menu or disc menu.*

When no disc is inserted

1. Switch the ignition to ACC or ON.
2. Insert the disc into the disc slot.
   After the disc is inserted, the playback starts.

⚠ CAUTION

Insert the disc with its label-side (decorated side) facing upward. If the disc is inserted upside-down, it may cause a malfunction.

When a disc has been inserted

1. Switch the ignition to ACC or ON.
2. Turn on the Rear Entertainment System.
3. Press the PLAY button to start playback.

NOTE

If the Rear Entertainment System has been turned off during a previous playback, playback automatically resumes when the system is turned on.

Stopping the playback

Press the STOP button to stop the playback.
To resume the playback, press the PLAY button.

Resume playback function

The Rear Entertainment System stores the position where the playback has been stopped using the resume playback function.
Press the PLAY button to resume the playback from the position previously stopped.

NOTE

If the RETURN button is pressed after the playback has been stopped, the resume playback function is canceled. Once the resume playback function is canceled, the playback starts from the first chapter (DVD video)/track (video CD, audio CD, DVD audio, or MP3/WMA CD) when the PLAY button is pressed.

Pausing the playback

Press the PAUSE button to pause the playback.
Press the PAUSE or PLAY button to resume the playback.

Fast-forward/Reverse

Fast-forward

Image and sound is fast-forwarded while the FWD button (▶▶) is pressed.

Reverse

Image and sound is reversed while the REW button (◀◀) is pressed.

Slow playback (DVD video and video CD)

Press the SLOW button to slow the playback.
Press the SLOW or PLAY button to return to normal playback speed.

NOTE

- *Slow playback is not available for audio CD, DVD audio and MP3/WMA CD.*
- *The unit is muted while in slow playback.*

Skipping the chapter/track

Chapter (DVD video) or track (video CD, DVD audio, audio CD, and MP3/WMA CD) can be skipped (changed).

Fast-forward skip

Press the NEXT button (▶▶|) to skip to the next chapter/track.

Reverse skip

Press the PREV button (|◀◀) to return to the beginning of the current chapter/track.

NOTE
To return to the beginning of the previous chapter/track, press the PREV button (⏮) again within 2 seconds after the button is pressed.

Skipping to desired chapter/track

The playback can be started from the desired chapter (DVD video)/track (video CD, DVD audio and audio CD) by entering the chapter/track number.

1. Enter the chapter/track number using the number keys (0 to 9) while the disc is being played.
2. Press the ENTER button to start the playback from the selected chapter/track.
   Example: when selecting chapter/track number “10”
   1.Press the number key (1).
   2.Press the number key (0).
   3.Press the ENTER button.

NOTE
- *If a chapter/track number not in the disc is input, the last chapter/track is played.*
- *Refer to the instruction manual attached to the disc for chapter/track numbers.*

Skipping to desired title/group

The playback can be started from the desired title/group by entering the title/group number.

1. Enter the title/group number using the number keys (0 to 9) while the playback is stopped.
2. Press the ENTER button to start the playback from the selected title.
   Example: When selecting title number “2”
   1.Press the number key (2).
   2.Press the ENTER button.

NOTE
- *If a title/group number not in the disc is input, the last title/group is played.*
- *Refer to the instruction manual attached to the disc for the title/group numbers.*

Bonus group playback

1. Press the number button (0) while a disc is not being played.
   If the disc has a bonus group*, the display shows as follows.

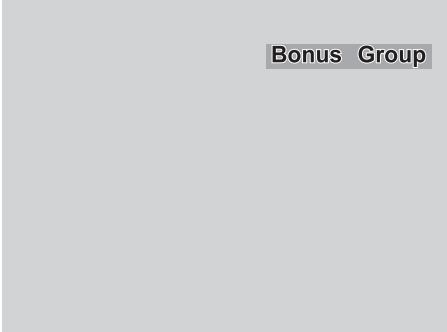

2. Press the ENTER button to change the display to the password input screen, then enter the password.
   For the password, see the instruction manual attached to the disc.

* Bonus group means the 'Bonus tracks' originally recorded in the disc.

▼Assist Functions (DVD video, DVD audio, video CD and audio CD)

Top menu and disc menu

NOTE

Operation may vary or cannot be performed depending on the disc. Refer to the instruction manual attached to the disc.

Top menu

Multiple titles may have been recorded on some discs.
For these DVD discs, the desired title can be selected in the top menu.

Disc menu

The unique functions of each DVD disc are recorded as the menu. This is referred to as the disc menu.
Various menu related images and sound are recorded in the disc menu.

Displaying/selecting top menu/disc menu

1. To display the top menu on the screen, press the MENU button while the disc is not being played. To display the disc menu on the screen, press the MENU button during playback.
2. Move the cursor to the desired menu by operating the select button up/down or left/right.
3. Press the ENTER button to operate the selected menu.
4. To return to playback, press the MENU button or the STOP button, then the PLAY button.

Function menu

In the function menu, the following items can be selected/operated while in playback.

① Language (sound and subtitle) selection (DVD video and DVD audio)
② Subtitle ON/OFF (DVD video)
③ Display angle change (DVD video and DVD audio)
④ Sound output balance adjustment (Video CD)
⑤ Repeat/random playback (Video CD, DVD audio and audio CD)

DVD video function menu

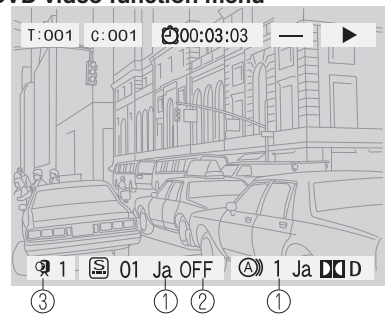

DVD audio function menu

Video CD/audio CD function menu

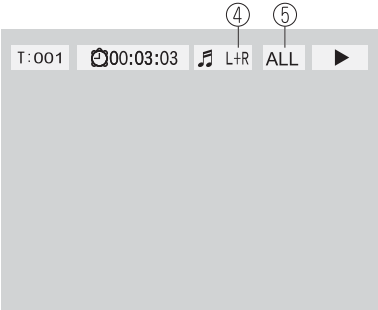

NOTE

- *In the function menu, the title/group number, chapter/track number, and playback elapsed time cannot be selected/changed.*
- *Settings set in the function menu are available only for the current disc. Settings set in the initial setting function menu are available for the Rear Entertainment System unit itself so that the settings remain after the disc is changed. Refer to Initial Setting Function on page 6-97.*

Displaying the function menu

Press the DISPLAY button while in playback to display the function menu on the monitor screen.
Press the DISPLAY button again to cancel.

NOTE

For audio CD, the function menu is automatically displayed when playback is started.

Language (sound and subtitles) selection (DVD video and DVD audio)

Sound and subtitles can be changed to the desired language.

NOTE

Available languages varies depending on the DVD disc.

1. Press the DISPLAY button to display the function menu.
2. Move the cursor and select the sound select mode or subtitle select mode by operating the select button to the left or right.

3. Move the cursor and select the desired language by operating the select button up or down.
4. Press the DISPLAY button to finish the function menu.

Subtitle ON/OFF (DVD video)

Subtitle on/off can be set.

1. Press the DISPLAY button to display the function menu.

2. Move the cursor to the subtitle ON/OFF mode by operating the select button to the left or right.

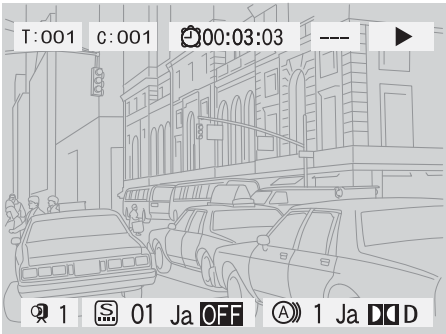

3. Select ON to display the subtitles, or OFF to hide them by operating the select button up or down.
4. Press the DISPLAY button to finish the function menu.

Display angle change (DVD video and DVD audio)

The image can be displayed at the desired angle.

NOTE

- *Display angle change is not available for discs other than multi-angle recorded DVD discs. Refer to the instruction manual attached to the disc for details.*
- *The available angles vary depending on the disc.*

1. Press the DISPLAY button to display the function menu.
2. Move the cursor to the display angle change mode by operating the select button to the left or right.

3. Move the cursor and select the desired angle by operating the select button up or down.
4. Press the DISPLAY button to finish the function menu.

Sound output balance adjustment (Video CD)

1. Press the DISPLAY button during the video CD playback to display the function menu.
2. Move the cursor to the sound output balance adjustment mode by operating the select button to the left or right.

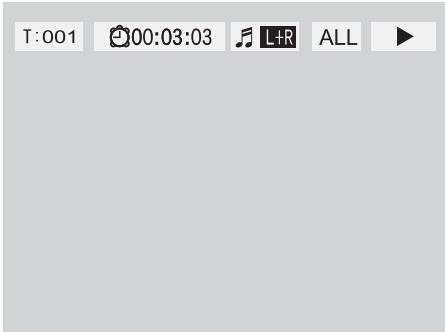

3. Set the sound output to the desired balance by operating the select button up or down.

   Press the button and the settings changes in the order of L+R →L →R. The sound balance changes according to the setting.

L: Audio recorded in the audio output channel from the left is output.
R: Audio recorded in the audio output channel from the right is output.
L + R: Audio recorded in the audio output channel from the left/right is output.

4. Press the DISPLAY button to finish the function menu.

Repeat/random playback (Video CD, DVD audio and audio CD)

Tracks can be played repeatedly or randomly.

1. Press the DISPLAY button while in the playback to display the function menu on the monitor screen.
2. Move the cursor to the repeat/random playback mode by operating the select button to the left or right.

3. Select the desired mode by operating the select button up or down.

   (1) During DVD audio:
   Each time the button is pressed, the mode changes in the order of 1 — NON — RPF — NOF — RND — RNF — ALL — 1.
   ALL: Repeats all tracks.
   1: Repeats the current track.
   RPF: Repeats all tracks in the current group
   NOF: Stops playback after all tracks in the current group are played.
   RND: Randomly selects and plays a track from all tracks.
   RNF: Randomly selects and plays a track from the current group.
   (2) During video CD and audio CD
   Each time the button is pressed, the mode changes in the order of 1 — NON — RND — ALL — 1.
   ALL: Repeats all tracks. (Returns to the beginning of the disc after all tracks are played.)
   1: Repeats the current track.
   NON: Stops playback after all tracks in the disc are played.
   RND: Randomly plays a track.

4. Press the DISPLAY button to finish the function menu.

NOTE
The function menu is displayed during audio CD playback and it cannot be canceled by pressing the DISPLAY button during playback.

▼Assist Functions (MP3/WMA CD)

Folders and files

The order of MP3/WMA file playback is as follows:

- A folder number is assigned to each folder on a disc.

- For example, the folder numbers for folders (1), (3), and (5) in the figure are not displayed because they do not contain MP3/WMA files.
- Folders and files in a hierarchy are played in the order that they are recorded on the disc by the writing software.
- Up to 255 files in 8 hierarchies can be played.
- The loading time may be longer depending on the disc.

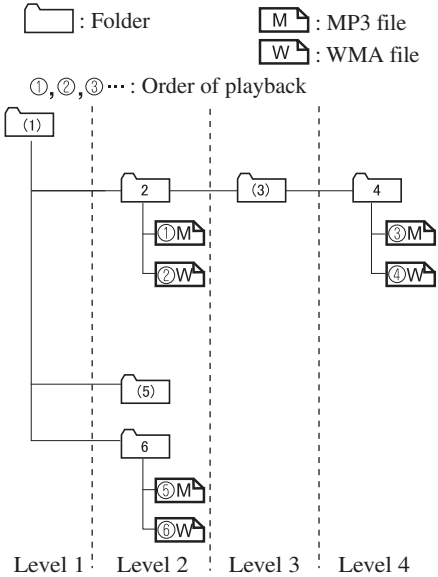

Function menu

If MP3/WMA files are to be played, operate the select button and move the cursor to select the playback file, playback mode, and display mode.

① Folder number/Playback list number
② File number
③ Playback elapsed time
④ Playback mode
⑤ Playback status
⑥ Folder/File information display window
⑦ Display mode

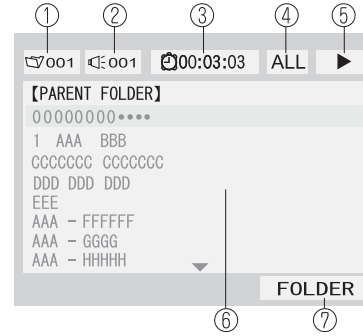

Changing the display mode

1. Move the cursor to the display mode by operating the select button to the left or right.
2. Change the display mode by operating the select button up or down.

Display	Displayed information
FOLDER	All folders and files display
TAG INFO	File tag display (FOLDER name, FILE name, TITLE name, ARTIST name, and ALBUM name) display
TREE IDX	Folder tree display
PLST IDX	Playlist display (If there is a playlist on the disc.)
PLAYLIST	Files on playlist display (If the files on the playlist are being played.)
CD TRACK	CD track display (If CD tracks on a disc which has both MP3/WMA and CD audio files are being played.)

Changing the playback mode

1. Move the cursor to the playback mode by operating the select button to the left or right.

2. Change the display mode by operating the select button up or down.

Display	Playback mode
ALL	All files are played repeatedly.
1	The current file is played repeatedly.
NON	All files are played once and the playback stops.
RPF	All files in the current folder are played repeatedly.
NOF	Files in the current folder are played once and the playback stops.
RND	All files are played randomly.
RNF	Files in the current folder are played randomly.

NOTE
If RND or RNF is selected during a playlist playback, files on the playlist are played randomly. Refer to Playlist File Playback on page 6-96.

Selection file

While in FOLDER display mode

1. Move the cursor to the folder/file information display window by operating the select button to the left or right.
2. Move the cursor to the desired folder/file by operating the select button up or down.
3. Press the ENTER button to play the selected file or to move to the selected folder.

NOTE
To return to an upper hierarchy, move the cursor to the "PARENT FOLDER" and press the ENTER button.

While in TREEIDX display mode

1. Move the cursor to the folder/file information display window by operating the select button to the left or right.
2. Move the cursor to the folder where the desired file is located by operating the select button up or down.
3. Press the ENTER button. Playback starts from the first track in the selected folder.

NOTE
- *"🔈" mark is attached to a folder if the folder has a playable MP3/WMA file.*
- *If a disc including a playlist is being played, the playlist file can be selected.*

Playlist file playback

Playlist files can be played using the following procedure:

1. Set the display mode to the TREEIDX mode. Refer to Assist Functions (MP3/WMA CD) on page 6-94.
2. Move the cursor to the PLAYLIST by operating the select button.
3. Press the ENTER button to change the display from TREEIDX to PLSTIDX.
4. Move the cursor to the desired playlist file by operating the select button up or down.
5. Press the ENTER button. Playback starts in the order programmed in the playlist file.

NOTE
The loading time after pressing the ENTER button may be longer depending on the disc.

▼Initial Setting Function

The settings set in the initial setting function remain after the unit is turned off or the disc is changed.
The following items can be set in the initial setting.
Lang: Sound and subtitle setting
Rating: Parental lock setting
Mark: On-Screen Mark, Angle Mark and Mode Priority settings
Audio: Audio DRC setting
Aspect: Not available

Displaying/selecting the initial setting function menu

1. Press the SET UP button while the disc is not being played to display the initial setting function menu on the monitor screen.

NOTE
- *The initial setting can be performed with no disc inserted.*
- *After setting the initial setting, the playback starts from the first chapter/track.*

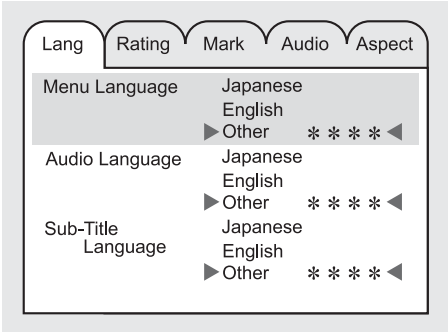

2. Move the cursor to the desired menu by operating the select button up/down or left/right.

3. Press the ENTER button. The selected menu is highlighted to indicate that the menu is selected.

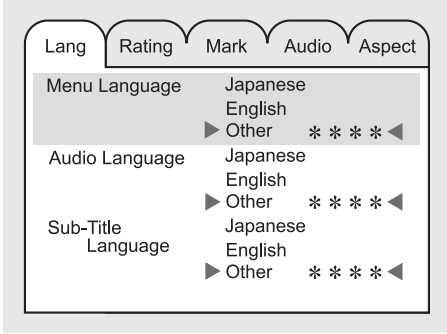

4. Select the item to be set by operating the select button up or down.

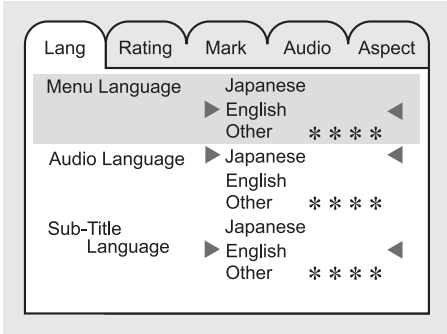

5. Press the ENTER button. The highlighted color returns to the previous color to indicate that the selected item is set.

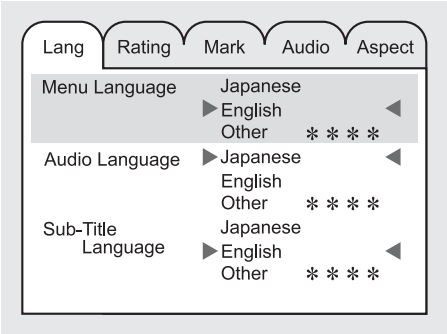

6. To finish the function menu on the monitor display, press the SET UP, MENU, or STOP button.

Lang (Language)

Sound and subtitles can be changed to the desired language.

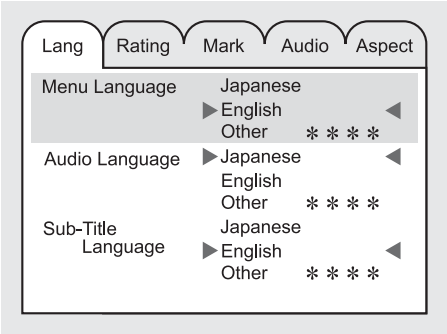

Menu language: Language used for top menu/disc menu
Sound language: Language used for movie sound (voice)
Subtitle language: Language used for subtitles

Changing to a language other than English and Japanese

NOTE

- *Languages other than English and Japanese can be set by entering the language code in the language code list. Refer to Language Code List on page 6-106.*
- *If the selected language is not recorded in the disc, the language is not available.*

1. Move the cursor to “Other” by operating the select button up or down.
2. Press the ENTER button, and then operate the select button to the right.

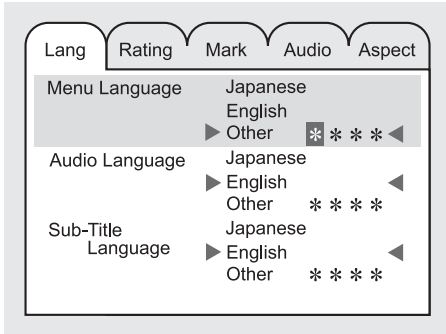

3. Enter the desired language code by pressing the number keys (0 to 9) or operating the select button up or down.
4. Press the ENTER button to set the language of the entered language code.

NOTE

If “English” or “Japanese” is selected afterward, the previously entered language code is cleared.

Rating

If the disc has a parental lock code, viewing can be restricted. Also, the setting can be protected by a password to prevent someone changing the setting.

Viewing can be restricted by setting the parent lock level.
For example, if the level is set to 6, level 7 or higher viewing is locked and cannot be played.

NOTE

- *Parent lock is not available depending on the disc.*
- *The initial password setting (when purchased) is "0000".*

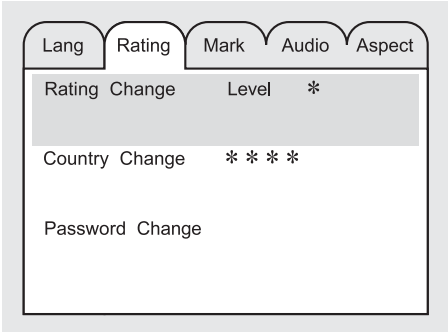

Rating change: Parent lock level setting
Country change: Setting for the country where the disc is being played.
Password change: Registered password changes

Changing the Rating setting

1. Enter the password by pressing the number keys (0 to 9) or operating the select button up or down.

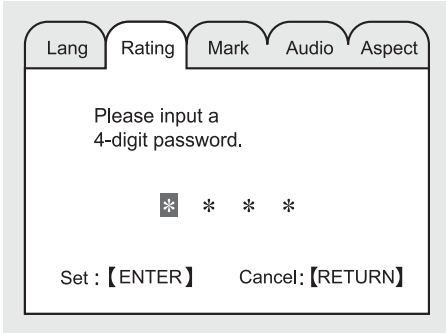

2. Press the ENTER button.
   If the password is confirmed, the Rating change mode is displayed.

NOTE

The setting cannot be changed without the correct password. Note down the password so you don't forget it.

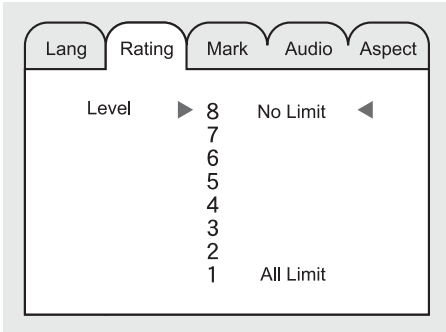

3. Select the desired parent lock level and press the ENTER button to set.

Country change

NOTE
It is necessary to set the country code because the parent lock level is different depending on the country. When using the unit in U.S.A., set the country code to "3018". The parent lock function is disabled without the country code setting (page 6-108).

1. Enter the password by pressing the number keys (0 to 9) or operating the select button up or down.

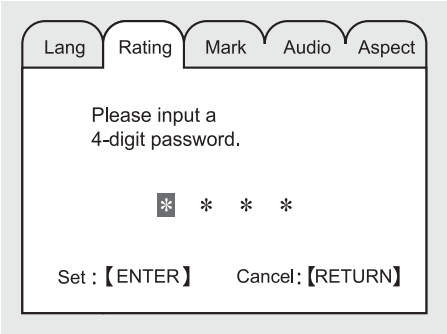

2. Press the ENTER button.
   If the password is confirmed, the password change mode is displayed.

NOTE
The setting cannot be changed without the correct password. Note down the password so you don't forget it.

3. Enter the country code by pressing the number keys (0 to 9) or operating the select button up or down.

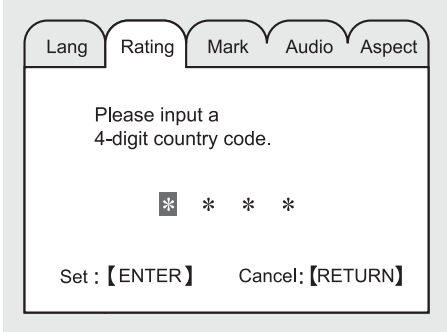

4. Press the ENTER button to set the country of the entered country code.

Changing the password

1. Enter the password by pressing the number keys (0 to 9) or operating the select button up or down.

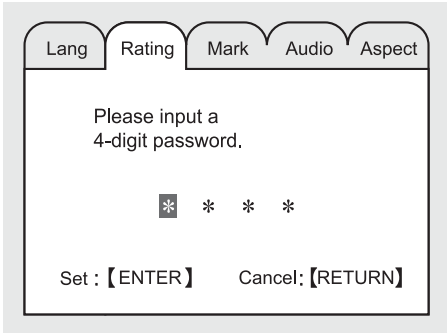

2. Press the ENTER button.
   If the password is confirmed, the password change mode is displayed.

NOTE
The setting cannot be changed without the correct password. Note down the password so you don't forget it.

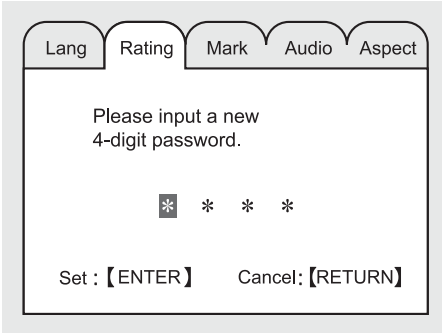

3. Enter the new password by pressing the number keys (0 to 9) or operating the select button up or down.
4. Press the ENTER button to set the new password.

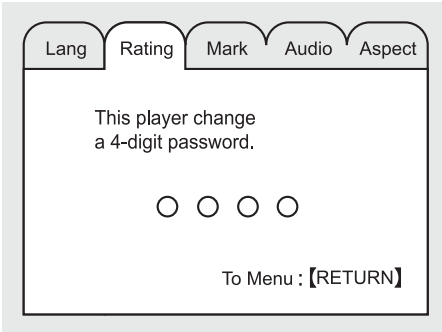

Mark

The DVD video playback status and angle display on/off, and priority of the inserted discs can be set.

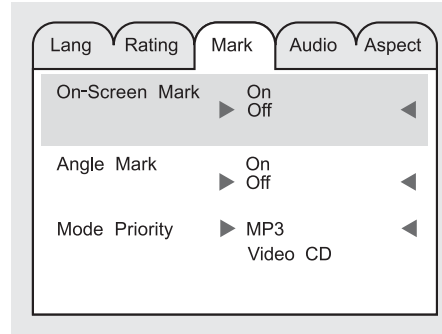

On-Screen Mark

Select ON to display, OFF not to display the DVD video playback status on the upper right corner of the screen.

When the screen display is on, the following marks are displayed on the upper right corner of the screen (in Disc mode).

Mark	Condition
▶	Playback
R	Stop (Resume standby)
❚❚	Pause
▶▶	Fast-forward
◀◀	Reverse

Angle display

The camera mark display when multi-angle can be performed.

NOTE
- *The display angle change is not available for discs other than multi-angle recorded DVD discs. Refer to the instruction manual accompanying the disc for details.*
- *The screen size and angle can be changed when On-Screen Mark and Angle Mark is off.*

Mode Priority

The priority of the inserted discs (CD-R/CD-RW) can be selected.

Audio

Digital Output

Not used with this unit.

Audio DRC

The audio dynamic range can be adjusted to reduce the difference between the maximum and minimum audio output. Audio compression of the DVD video playback can be selected or deselected during playback using the following modes:

Mode	Function
NONE	Playback with normal volume
LINE	Lower volume is increased to reduce difference in volume range.
RF	Use when it is still difficult to hear sound while using LINE. Sound quality is reduced while using RF.

NOTE
Only sound output from the headphones is available.

Auxiliary Input (AUX mode)

In AUX mode, AV equipment such as a video game player or a video camera can be used by connecting the image and sound cables to the auxiliary terminals.

NOTE
- *Before operating, read the instruction manual accompanying the AV equipment to be used.*
- *To listen to the Rear Entertainment System sound from the vehicle speakers, change the audio sound to the Rear Entertainment System sound.*
  Refer to Sound Output from Vehicle Speakers on page 6-83.
  To listen to audio other than from the speakers of the rear entertainment system, it is necessary to use the wireless headphones that are included. For headphone specification, refer to "Operation Tips for Headphones" (page 6-73).
- *The cooling fan for this unit may activate if the temperature of the unit is high, however, this does not indicate a malfunction.*

▼Auxiliary Terminals and Power Outlet

The auxiliary terminals and power outlet are positioned as shown in the figure.

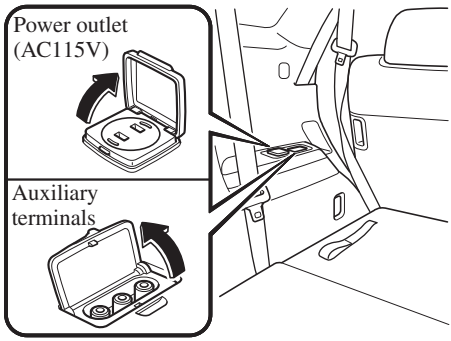

Auxiliary terminals

The auxiliary terminals consist of one image input terminal and two sound input terminals (for left and right).
Image input terminal: Yellow
Sound input (Right) terminal: Red
Sound input (Left) terminal: White
To use, open the cover.

CAUTION

Close the cover when the terminals are not in use. If foreign material penetrates, or liquid is spilled on it, it may cause a malfunction.

NOTE

- *For monaural equipment (with one sound output terminal), connect the terminal to the sound input terminal (White). The sound is output from the speaker to which the terminal has been connected.*
- *Noise may occur depending on the connected equipment.*

Power Outlet

The power outlet can be used as a power supply for electrical devices when the ignition is switched to ACC or ON.
Only use AC 115 V electrical appliances requiring no greater than 100 W
Open the cover to use the power outlet.

WARNING

- *Never use medical instruments with the power outlet.*
- *Follow the cautions below to prevent electrical shock.*
  - *Do not plug accessories into the power outlet or unplug them with wet hands.*
  - *Do not put anything other than plugs into the outlet.*
  - *Do not disassemble the outlet.*

CAUTION

- *Always close the cover when not in use. If foreign objects or liquid penetrate the outlet, it may cause a malfunction.*
- *Do not use electrical appliances that exceed the prescribed power capacity. It may cause a malfunction.*

NOTE

To prevent discharging of the battery, do not use the auxiliary input for long periods with the engine off or idling.

Plug-in

1. Open the cover.
2. Lightly insert the plug and turn the outlet 90 degrees, then insert it fully.

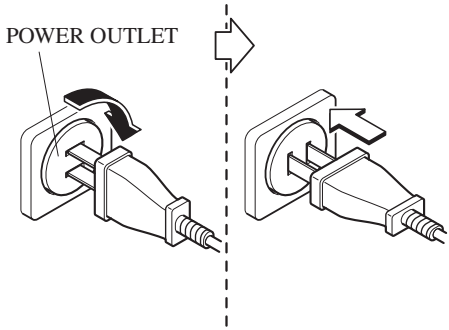

Unplug

1. Pull the plug out.
2. Close the cover.

NOTE
The following electrical appliances may not operate even if their electrical capacity is 100 W or less.
- *Appliances requiring large amounts of power for activation (such as cathode-ray tube televisions, refrigerators with a compressor, electrical pumps, and electrical tools)*
- *Appliances with a power supply frequency switch function (such as clocks and audio)*
- *Appliances for precise data processing (such as measurement equipment)*

Some electrical appliances other than the above may not operate.
The protection circuit may operate and the power supply may be stopped to prevent battery depletion.
When using an electrical appliance for data processing such as a personal computer, back up the data frequently.
The power outlet (AC115V) cannot be used in the following cases:
- *Battery power is weak*
- *Appliances with a capacity of 100 W or more are used*
- *Cabin temperature is extremely hot*

Noise may occur during radio or television operation depending on the electrical appliance being used.

▼Using AV Equipment

⚠ CAUTION

For safe driving, adjust the volume while driving so that ambient sound can be heard.

NOTE
Before operating, read the instruction manual accompanying the AV equipment to be used.

1. Switch the ignition off.
2. If a power supply is necessary, connect the outlet to the power outlet.
   Refer to Auxiliary Terminals and Power Outlet on page 6-102.
3. Connect the image cable and sound cables to the input terminals.

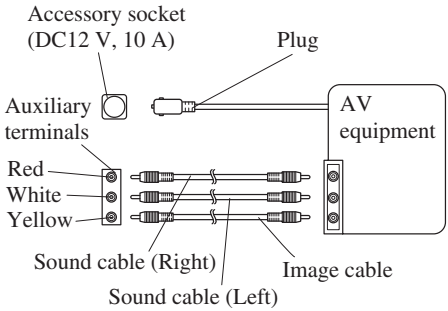

NOTE
- *For monaural equipment (with one sound output terminal), connect the terminal to either of the sound input terminals (Red) and (White). The sound is output from the speaker to which the terminal has been connected.*
- *Noise may occur depending on the connected equipment.*

4. Switch the ignition to ACC or ON.

5. Press the SOURCE button and select the AUX mode.
   Refer to Mode on page 6-87.

6. Operate the equipment following the instruction manual accompanying the equipment.

Language Code List

Language		Code
Abkhazian	ab	1001
Afar	aa	1000
Afrekaans	af	1005
Albanian	sq	2816
Amharic	am	1012
Arabic	ar	1017
Armenian	hy	1724
Assamase	as	1018
Aymara	ay	1024
Azerbaijani	az	1025
Bashkir	ba	1100
Basque	eu	1420
Bengali	bn	1113
Bhutani	dz	1325
Bihari	bh	1107
Bislama	bi	1108
Breton	br	1117
Bulgarian	bg	1106
Burmese	my	2224
Byelorussian	be	1104
Cambodian	km	2012
Catalan	ca	1200
Chinese	zh	3507
Corsican	co	1214
Croatian	hr	1717
Czech	cs	1218
Danish	da	1300
Dutch	nl	2311
English	en	1413
Esperanto	eo	1414
Estonian	et	1419
Faroese	fo	1514
Fiji	fj	1509
Finnish	fi	1508
French	fr	1517
Friesian	fy	1524
Galician	gl	1611
German	de	1304
Gorgian	ka	2000

Language		Code
Greek	el	1411
Greenlandic	kl	2011
Guarani	gn	1613
Gujarati	gu	1620
Hausa	ha	1700
Hebrew	iw	1822
Hindi	hi	1708
Hungarian	hu	1720
Icelandic	is	1818
Indonesian	in	1813
Interlingua	ia	1800
Interlingue	ie	1804
Inupiak	ik	1810
Irish	ga	1600
Italian	it	1819
Japanese	ja	1900
Javanese	jw	1922
Kannada	kn	2013
Kashmiri	ks	2018
Kazakh	kk	2010
Kinyarwanda	rw	2722
Kirghiz	ky	2024
Kirundi	rn	2713
Korean	ko	2014
Kurdish	ku	2020
Laothian	lo	2114
Latin	la	2100
Latvian	lv	2121
Lingala	ln	2113
Lithuanian	lt	2119
Macedonian	mk	2210
Malagasy	mg	2206
Malay	ms	2218
Malayalam	ml	2211
Maltese	mt	2219
Maori	mi	2208
Marathi	mr	2217
Moldavian	mo	2214
Mongolian	mn	2213

Language		Code
Nauru	na	2300
Nepali	ne	2304
Norwegian	no	2314
Occtian	oc	2402
Oriya	or	2417
Oromo	om	2412
Panjabi	pa	2500
Pashto, Pushto	ps	2518
Persian	fa	1500
Polish	pl	2511
Portuguese	pt	2519
Quechua	qu	2620
Rhaeto-Romance	rm	2712
Romanian	ro	2714
Russian	ru	2720
Samoan	sm	2812
Sangho	sg	2806
SanSkrit	sa	2800
Scots-Gaelic	gd	1603
Serbian	sr	2817
Serbo-Croatian	sh	2807
Sesotho	st	2819
Setswana	tn	2913
Shona	sn	2813
Sindhi	sd	2803
Singhalese	si	2808
Siswaiti	ss	2818
Slovak	sk	2810
Slovenian	sl	2811
Somali	so	2814
Spanish	es	1418
Sundanese	su	2820
Swahili	sw	2822
Swedish	sv	2821
Tagalog	tl	2911
Tajik	tg	2906
Tamil	ta	2900
Tatar	tt	2919
Telugu	te	2904
Thai	th	2907
Tibetan	bo	1114

Language		Code
Tigrinya	ti	2908
Tonga	to	2914
Tsonga	ts	2918
Tukmen	tk	2910
Turkish	tr	2917
Twi	tw	2922
Ukrainian	uk	3010
Urdu	ur	3017
Uzbek	uz	3025
Vietnamese	vi	3108
Volapuk	vo	3114
Welsh	cy	1224
Wolof	wo	3214
Xhosa	xh	3307
Yiddish	ji	1908
Yoruba	yo	3414
Zulu	zu	3520

Country Code List

Country		Code
Afghanistan	AF	1005
Albania	AL	1011
Algeria	DZ	1325
American Samoa	AS	1018
Andorra	AD	1003
Angola	AO	1014
Anguilla	AI	1008
Antarctica	AQ	1016
Antigua and Barbuda	AG	1006
Argentina	AR	1017
Armenia	AM	1012
Aruba	AW	1022
Australia	AU	1020
Austria	AT	1019
Azerbaijan	AZ	1025
Bahamas	BS	1118
Bahrain	BH	1107
Bangladesh	BD	1103
Barbados	BB	1101
Belarus	BY	1124
Belgium	BE	1104
Belize	BZ	1125
Benin	BJ	1109
Bermuda	BM	1112
Bhutan	BT	1119
Bolivia	BO	1114
Bosnia and Herzegovina	BA	1100
Botswana	BW	1122
Bouvet Island	BV	1121
Brazil	BR	1117
British Indian Ocean Territory	IO	1814
Brunei	BN	1113
Bulgaria	BG	1106
Burkina Faso	BF	1105
Burundi	BI	1108
Cambodia	KH	2007
Cameroon	CM	1212
Canada	CA	1200

Country		Code
Cape Verde	CV	1221
Cayman Islands	KY	2024
Central African Republic	CF	1205
Chad	TD	2903
Chile	CL	1211
China	CN	1213
Christmas Island	CX	1223
Cocos (Keeling) Islands	CC	1202
Colombia	CO	1214
Comoros	KM	2012
Congo	CG	1206
Congo, The Democratic Republic of the	CD	1203
Cook Islands	CK	1210
Costa Rica	CR	1217
Cote D'Ivoire	CI	1208
Croatia (Hrvatska)	HR	1717
Cuba	CU	1220
Cyprus	CY	1224
Czech Republic	CZ	1225
Denmark	DK	1310
Djibouti	DJ	1309
Dominica	DM	1312
Dominican Republic	DO	1314
East Timor	TP	2915
Ecuador	EC	1402
Egypt	EG	1406
El Salvador	SV	2821
Equatorial Guinea	GQ	1616
Eritrea	ER	1417
Estonia	EE	1404
Ethiopia	ET	1419
Falkland Islands (Malvinas)	FK	1510
Faroe Islands	FO	1514
Fiji	FJ	1509
Finland	FI	1508
France	FR	1517
French Guiana	GF	1605
French	PF	2505

Country		Code
French Southern Territories	TF	2905
Gabon	GA	1600
Gambia	GM	1612
Georgia	GE	1604
Germany	DE	1304
Ghana	GH	1607
Gibraltar	GI	1608
Greece	GR	1617
Greenland	GL	1611
Grenada	GD	1603
Guadeloupe	GP	1615
Guam	GU	1620
Guatemala	GT	1619
Guinea	GN	1613
Guinea-Bissau	GW	1622
Guyana	GY	1624
Haiti	HT	1719
Heard and McDonald Islands	HM	1712
Holy See (Vatican City State)	VA	3100
Honduras	HN	1713
Hong Kong	HK	1710
Hungary	HU	1720
Iceland	IS	1818
India	IN	1813
Indonesia	ID	1803
Iran, Islamic Republic of	IR	1817
Iraq	IQ	1816
Ireland	IE	1804
Israel	IL	1811
Italy	IT	1819
Jamaica	JM	1912
Japan	JP	1915
Jordan	JO	1914
Kazakstan	KZ	2025
Kenya	KE	2004
Kiribati	KI	2008
Korea (North), Democratic People's Republic	KP	2015
Korea (South), Republic of	KR	2017
Kuwait	KW	2022
Kyrgyzstan	KG	2006

Country		Code
Lao People's Democratic	LA	2100
Latvia	LV	2121
Lebanon	LB	2101
Lesotho	LS	2118
Liberia	LR	2117
Libyan Arab Jamahiriya	LY	2124
Liechtenstein	LI	2108
Lithuania	LT	2119
Luxembourg	LU	2120
Macau	MO	2214
Macedonia, the Former Yugoslav Republic of	MK	2210
Madagascar	MG	2206
Malawi	MW	2222
Malaysia	MY	2224
Maldives	MV	2221
Mali	ML	2211
Malta	MT	2219
Marshall Islands	MH	2207
Martinique	MQ	2216
Mauritania	MR	2217
Mauritius	MU	2220
Mayotte	YT	3419
Mexico	MX	2223
Micronesia, Federated States	FM	1512
Moldova, Republic	MD	2203
Monaco	MC	2202
Mongolia	MN	2213
Montserrat	MS	2218
Morocco	MA	2200
Mozambique	MZ	2225
Myanmar (Burma)	MM	2212
Namibia	NA	2300
Nauru	NR	2317
Nepal	NP	2315
Netherlands	NL	2311
Netherlands Antilles	AN	1013
New Caledonia	NC	2302
New Zealand	NZ	2325
Nicaragua	NI	2308
Niger	NE	2304

Country		Code
Nigeria	NG	2306
Niue	NU	2320
Norfolk Island	NF	2305
Northern Mariana Islands	MP	2215
Norway	NO	2314
Oman	OM	2412
Pakistan	PK	2510
Palau	PW	2522
Palestinian Territory, Occupied	PS	2518
Panama	PA	2500
Papua New Guinea	PG	2506
Paraguay	PY	2524
Peru	PE	2504
Philippines	PH	2507
Pitcairn	PN	2513
Poland	PL	2511
Portugal	PT	2519
Puerto Rico	PR	2517
Qatar	QA	2600
Reunion	RE	2704
Romania	RO	2714
Russian Federation	RU	2720
Rwanda	RW	2722
Saint Helena	SH	2807
Saint Kitts and	KN	2013
Saint Lucia	LC	2102
Saint Pierre and Miquelon	PM	2512
Saint Vincent and the Grenadines	VC	3102
Samoa	WS	3218
San Marino	SM	2812
Sao Tome and Principe	ST	2819
Saudi Arabia	SA	2800
Senegal	SN	2813
Seychelles	SC	2802
Sierra Leone	SL	2811
Singapore	SG	2806
Slovakia (Slovak Republic)	SK	2810
Slovenia	SI	2808
Solomon Islands	SB	2801
Somalia	SO	2814

Country		Code
South Africa	ZA	3500
South Georgia and the South Sandwich Islands	GS	1618
Spain	ES	1418
Sri Lanka	LK	2110
Sudan	SD	2803
Suriname	SR	2817
Svalbard and Jan Mayen Islands	SJ	2809
Swaziland	SZ	2825
Sweden	SE	2804
Switzerland	CH	1207
Syrian Arab Republic	SY	2824
Taiwan, Province of China	TW	2922
Tajikistan	TJ	2909
Tanzania, United Republic	TZ	2925
Thailand	TH	2907
Togo	TG	2906
Tokelau	TK	2910
Tonga	TO	2914
Trinidad and Tobago	TT	2919
Tunisia	TN	2913
Turkey	TR	2917
Turkmenistan	TM	2912
Turks and Caicos Islands	TC	2902
Tuvalu	TV	2921
Uganda	UG	3006
Ukraine	UA	3000
United Arab Emirates	AE	1004
United Kingdom	GB	1601
United States	US	3018
United States Minor Outlying Islands	UM	3012
Uruguay	UY	3024
Uzbekistan	UZ	3025
Vanuatu	VU	3120
Vatican City State See Holy See	VA	3100
Venezuela	VE	3104
Viet Nam	VN	3113
Virgin Islands, British	VG	3106
Virgin Islands, U.S.	VI	3108

Country		Code
Wallis and Futuna Islands	WF	3205
Western Sahara	EH	1407
Yemen	YE	3404
Yugoslavia	YU	3420
Zaire See Congo, The Democratic Republic of the	ZR	3517
Zambia	ZM	3512
Zimbabwe	ZW	3522

Error Message

▼Message

Disc mode error message

Use of Non-supported Disc
An error message is displayed if a non-supported DVD-ROM disc, a non-supported disc format or a disc (PAL, other) with a different image signal encoding is read.

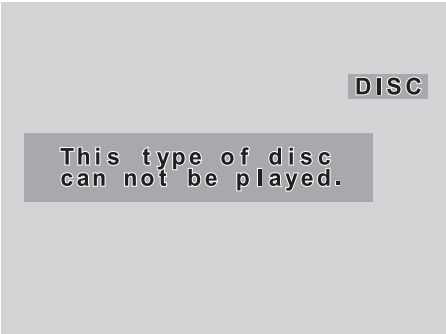

If the disc content cannot be read:

An error message is displayed if the disc cannot be read due to scratches or the content cannot be read.

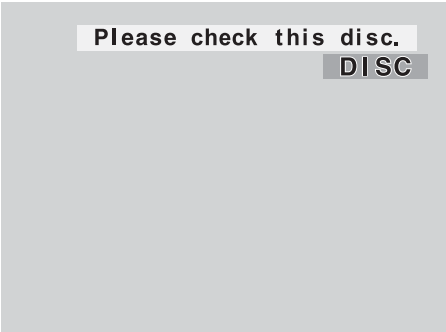

Incorrect region code

An error message is displayed if a disc other than one with region code 1 or including region 1 is inserted.

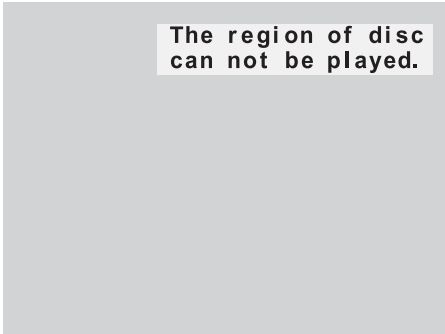

High temperature malfunction

If the temperature surrounding the DVD player area exceeds 88°C (190°F), the DVD player operation is stopped to protect the unit. When the temperature decreases to 70°C (158°F) or less, the protective circuit function is cleared and the operation is restored.

System errors (Common to each mode)

Power malfunction

An error message is displayed if the power supply to the rear entertainment system drops (About 9.5 V or less), and the power is turned off.
The power is restored when the power supply to the rear entertainment system is 10 V or more.

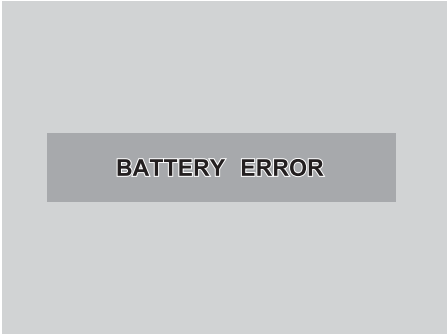

High temperature malfunction

If the temperature around the LCD area exceeds 95°C (203°F), the power supply is turned off to protect the LCD.
When the temperature around the LCD area is 85°C (185°F) or less, the protective circuit function is cleared and the operation is restored.

Symptoms and Actions

If any malfunction is suspected, verify the following before requesting a repair.
If the problem cannot be solved after performing the procedure, have the system inspected at an Authorized Mazda Dealer.
Some functions are not available depending on the disc. Read the instruction manual attached to the disc before operating.

Symptom	Cause	Action
System cannot be turned on	The ignition is switched off.	Switch the ignition to ACC or ON.
	The remote controller batteries are weak.	Replace the batteries with new ones. Refer to Remote Controller on page 6-81.
	Remote controller batteries poles are pointed in the wrong direction.	Install the batteries in the correct direction. Refer to Remote Controller on page 6-81.
	The vehicle battery is weak.	Recharge or replace the vehicle battery.
	The cabin temperature (Rear Entertainment System unit temperature) is high.	Retry after the temperature has lowered.
Image cannot be displayed	The ignition is switched off.	Switch the ignition to ACC or ON.
	No disc is inserted.	Insert a disc.
	An invalid disc is inserted.	Insert a disc which can be played by this unit. Refer to Operating Tips for Disc on page 6-66.
	The wrong mode has been selected.	Select the correct mode by pressing the SOURCE button. Refer to Mode on page 6-87.
Disc cannot be played	No disc is inserted.	Insert a disc.
	Disc is inserted upside down.	Insert the disc with the label-side up.
	Parent lock level is set.	Clear or change the parent lock level.
Sound cannot be output	The ignition is switched off.	Switch the ignition to ACC or ON.
	Volume is too low.	Adjust the volume.
	The audio unit is not set in the Rear Entertainment System mode.	Set the audio unit in the Rear Entertainment System mode. Refer to Sound Output on page 6-83.
	An invalid disc has been inserted.	Insert a disc which can be played by this unit. Refer to Operating Tips for Disc on page 6-66.
	No disc is inserted.	Insert a disc.
	Disc is inserted upside down.	Insert the disc with the label-side up.
	Playback has been paused.	Cancel the pause.
	The playback is in slow, fast-forward, or reverse mode.	Select normal playback. Refer to Basic Operation on page 6-88.
Audio is not output from vehicle's speakers or headphones	DTS format language is selected and played back. (The vehicle speakers and wireless headphones cannot playback DTS format language)	Select audio other than DTS format.
Image and/or sound is distorted.	The disc is dirty.	Clean the signal surface of the disc.
	The disc has a scratch.	Replace the disc with another one.
	Dew condensation on the disc	Clear the dew condensation.

Symptom	Cause	Action
There are subtle spots or luminescent spots on the screen.	The LCD is high tech equipment with a 99.99% effective sensor resolution. However, please be aware that 0.01% pixel failure or pixel continuous illuminated pixels may exist.	—
Subtitles cannot be changed	Other languages are not recorded on the disc.	Check the available language in the instruction manual accompanying the disc.
Display angle cannot be changed	Multiple angles are not recorded on the disc.	Check the available angle in the instruction manual accompanying the disc.
Remote controller is inoperable	The remote controller is not pointed toward the receiver on the unit.	Point the remote controller toward the receiver on the unit. The receiver is near the disc slot.
	There is an obstruction between the remote controller and the unit.	Operate the remote controller avoiding the obstruction so that the signal reaches the receiver on the unit. The receiver is near the disc slot.
	The remote controller batteries are weak.	Replace the batteries with new ones. Refer to Remote Controller on page 6-81.
	Remote controller batteries poles are pointed in the wrong direction.	Install the batteries in the correct direction. Refer to Remote Controller on page 6-81.
No audio output from the headphones.	No power to the headphones.	Turn on the power to the headphones.
	The headphones' optical receiver is not pointed towards the main unit's transmitter.	Point the headphones' optical receiver towards the main unit's transmitter. The main unit's transmitter is located near the disc insertion area.
	There is an obstruction between the headphones and the main unit.	Avoid the obstruction.
	The headphones' batteries are depleted.	Replace the batteries with new ones.
	The headphones' batteries have not been correctly inserted in the + /— directions.	Insert the batteries correctly.
	The headphones are exposed to direct sunlight.	Use the headphones while avoiding direct sunlight.
	Power turns off automatically.	If there is no sound for 3 minutes or longer, or if the headphones are continuously used for 4 hours, there is a function which automatically turns the power off. Turn the power to headphones back on.
The headphones' optical reception range is too narrow.	The headphones' batteries are weak.	Replace the batteries with new ones.
There is excessive noise in the headphone audio	The headphones' batteries are weak.	Replace the batteries with new ones.

Bluetooth®*

Bluetooth® Hands-Free outline

When a Bluetooth® device (mobile phone) is connected to the vehicle's Hands-Free unit via radio wave transmission, a call can be made or received by pressing the talk button, pick-up button, hang-up button, or voice command on the steering wheel, or by operating the panel. For example, even if a device (mobile phone) is in your coat pocket, a call can be made without taking the device (mobile phone) out and operating it directly.

Bluetooth® audio outline

When a portable audio unit equipped with the Bluetooth® communication function is programmed to the Bluetooth® unit, you can listen to music recorded on the programmed portable audio device from the vehicle's speakers. It is not necessary to connect the portable audio device to the vehicle's external input terminal. After programming, operate the vehicle audio control panel to play/stop the audio.

Applicable Bluetooth® specification
Ver. 2.0 or higher

Response profile
- HFP (Hands-Free Profile) Ver. 1.5
- DUN (Dial-up Networking Profile) Ver. 1.1
- PBAP (Phone Book Access Profile) Ver. 1.0
- OPP (Object Push Profile) Ver. 1.1
- MAP (Message Access Profile) Ver. 1.0

 *Some models.

▼Component Parts

Audio unit

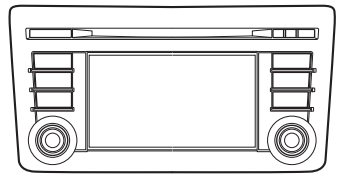

Talk button, Pick-up button and Hang-up button

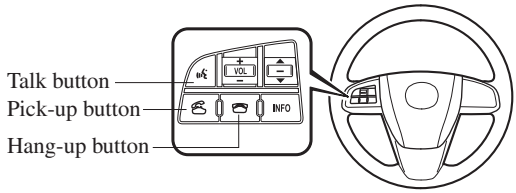

Microphone

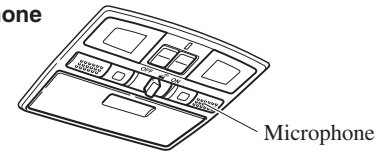

Audio unit

The audio unit is used for volume adjustment and touch panel operation. Bluetooth® information is displayed in the display. The screen is switched by touching the tab for each function to be used.
Do not press the panel strongly or press it with a sharp-pointed object.

Microphone (Hands-Free)

The microphone is used for speaking voice commands or exchanging conversation.

Talk button, Pick-Up button and Hang-Up button (Hands-Free)

The basic functions of Bluetooth® Hands-Free can be used for such things as making calls or hanging up using the talk button, pick-up button and hang-up button on the steering wheel.

Volume adjustment

The power/volume dial of the audio unit is used to adjust the volume. Turn the dial to the right to increase volume, to the left to decrease it.
The volume can also be adjusted using the volume button on the steering wheel.

Conversation volume and the volume of the voice guidance and ringtone can each be set in advance.

1. Touch the Setup on-screen tab to display the Bluetooth® setting screen.
2. Touch the Volume Settings on-screen button to display the volume adjustment screen.
3. **(Volume up)** Touch the + on-screen button.
   (Volume down) Touch the − on-screen button.
4. **Prompt:** "Phone call will be at this volume." or "Voice guidance will be at this volume."

NOTE
The volume of the audio unit cannot be adjusted while Bluetooth® Hands-Free is being used.

▼Bluetooth® Preparation

Device programming (Pairing)

To use Bluetooth® audio and Hands-Free, the device equipped with Bluetooth® has to be programmed to the unit using the following procedure. A maximum of seven devices including Bluetooth® audio devices and Hands-Free mobile phones can be programmed.

NOTE
- *For your safety, a device can be programmed only when the vehicle is parked. If the vehicle starts to move, the pairing procedure will end. Park the car in a safe place before programming.*
- *The communication range of a Bluetooth® equipped device is about 10 meters (32 ft) or less.*

⚠ CAUTION

Some Bluetooth® mobile devices are not compatible with the vehicle. Consult an Authorized Mazda Dealer, Mazda's call center or Web support center for information regarding Bluetooth® mobile device compatibility:

- ***U.S.A.***
  Phone: 800-430-0153
  Web: www.MazdaUSA.com/bluetooth
- ***Canada***
  Phone: 800-430-0153
  Web: www.mazdahandsfree.ca
- ***Mexico***
  Center of Attention to Client (CAC)
  Phone: 01-800-01-MAZDA
  Web: www.mazdamexico.com.mx

Pairing Procedure

1. Press the phone button (PHONE).
2. Touch the Setup on-screen tab.
3. Touch the Bluetooth Setup on-screen button. The list of pairing devices is displayed.

4. Touch the [Add New Device] on-screen button to display the message and switch to the device operation.
5. Using your device, perform a search for the Bluetooth® device (Peripheral device).
6. Select “Mazda” from the device list searched by the device.
7. **(Device with Bluetooth® version 2.0)**
   Input the displayed 4-digit pairing code into the device.
   (Device with Bluetooth® version 2.1 or higher)
   - **Just Works is detected**
     The pairing is performed automatically.
   - **Numeric Comparison is detected**
     Make sure the displayed 6-digit code on the audio is also displayed on the device, and touch the [Yes] on-screen button. A connection license agreement may be required depending on the device.
8. **(Device with PBAP profile)**
   Call history (incoming/outgoing history) for the device is downloaded automatically. The operation may be required depending on the device.

After a device is registered, the system automatically identifies the device. By activating Bluetooth® Hands-Free again, or by activating Bluetooth® Hands-Free first after switching the ignition from OFF to ACC, the device connection condition is indicated in the display.

Device selection

If several devices have been programmed, the Bluetooth® unit links the device last programmed. If you would like to link a different programmed device, it is necessary to change the link. The order of device priority after the link has been changed is maintained even when the ignition is switched off.

NOTE
If the device name cannot be displayed, “...” is added at the end of the title which is displayed.

Connecting other devices

1. Press the phone button (**PHONE**).
2. Touch the [Setup] on-screen tab.
3. Touch the [Bluetooth Setup] on-screen button.
4. Touch the device name which you want to connect to display the device information screen.
5. Touch the [Phone] on-screen button to connect as a Hands-Free device. Touch the [Music player] on-screen button to connect as a Bluetooth® audio device.
6. Touch the [Done] on-screen button.
7. **(Device with PBAP profile)**
   Call history (incoming/outgoing history) for the device is downloaded automatically.

If the connection is completed, the device name is displayed. Touch the [Done] on-screen button to display the device list screen and display the icon in the new device name which is connected.

Disconnecting a device

1. Touch the [Setup] on-screen tab.

2. Touch the Bluetooth Setup on-screen button.
3. Touch the device name which is currently connected to display the device information screen.
4. Touch the Phone on-screen button to disconnect the Hands-Free device. Touch the Music player on-screen button to disconnect the audio device.
5. Touch the Done on-screen button.

Deleting a device

1. Touch the Setup on-screen tab.
2. Touch the Bluetooth Setup on-screen button.
3. Touch the device name which you want to delete.
4. Touch the Delete Device on-screen button.
5. Touch the Yes on-screen button.

NOTE
If you want to delete all of the pairing devices, restore the default settings.

Changing PIN code

PIN code (4 digits) can be changed.

1. Touch the Setup on-screen tab.
2. Touch the Bluetooth Setup on-screen button.
3. Touch the Change Paring code on-screen button.
4. Delete the PIN code which is currently set.
5. Input the new PIN code to be set.
6. Touch the Done on-screen button.

Restoring default settings

All the pairing device information and phonebook data can be deleted.

1. Touch the Setup on-screen tab.
2. Touch the Restore Defaults on-screen button.
3. Touch the Continue on-screen button.
4. Touch the Yes on-screen button.

▼Available Language

The Bluetooth® Hands-Free System applies to the following languages:
- English
- Spanish
- French

Refer to Setup on page 6-50.

▼Voice Recognition

The Mazda Bluetooth® Hands-free system can be used to make calls or operate the audio unit using voice recognition which includes numerous convenient commands. In this section, the basic operation of the voice recognition is explained.

Activating Voice Recognition

To Activate the Main Menu: Press the talk-button.
To Activate the Phone Menu: Press the pick-up button, or after activating the main menu, say “Phone”.
To Activate the Navi Menu: After activating the main menu, say “Navigation”.

NOTE

- *When activating the Phone Menu from the Main Menu, the user is informed of the available options (Call, Dial, Redial, Call back, Setup or Emergency) via voice navigation.*
- *For voice recognition details with the navigation system, refer to the separate "NAVIGATION SYSTEM Owner's Manual".*

Ending Voice Recognition

Use one of the following methods:

- Press and hold the talk-button.
- Press the hang-up button.

Skipping Voice Guidance (for faster operation)

Press and release the talk-button.

NOTE

- *The Bluetooth® Hands-Free system is operable several seconds after the ignition is switched to ACC or ON (requires less than 15 seconds).*
- *When operating the audio unit or the A/C while using Bluetooth® Hands-Free, the beep sounds or voice guidance (audio unit)/ cannot be heard.*

Tutorial

The tutorial explains how to use Bluetooth® Hands-Free.
The available tutorial items are General, Phone, and Audio.
To activate the tutorial, do the following:

1. Press the talk button.
2. **Prompt:** "Ready"
3. **Say:** [Beep] "Tutorial"
4. **Prompt:** "Tutorial"
5. **Say:** [Beep] "XXXXX... (Tutorial item)"
6. Follow the prompts to receive the appropriate voice guidance instructions.

Commands useable anytime during voice recognition

"Help" , "Go Back" , "Cancel" , "Display OFF/Display ON" are commands which can be used at anytime during voice recognition.

Help function use

The help function informs the user of all the available voice commands under the current conditions.

1. **Say:** [Beep] "Help"
2. Follow the prompts to receive the appropriate voice guidance instructions.

Returning to previous operation

This command is for returning to the previous operation while in the voice recognition mode.
Say: [Beep] "Go Back"

Cancel

The Bluetooth® Hands-Free system transitions to standby status if the following operation is performed while the system is activated.
Say: [Beep] "Cancel"

Display OFF/Display ON

The audio unit display can be switched off/on by voice recognition operation.
Say: [Beep] "Display OFF" (or "Display ON")

To prevent a deterioration in the voice recognition rate and voice quality, the following points should be observed:

- The Hands-free system cannot perform voice recognition while voice guidance or a beep sound is operating. Wait until the voice guidance or the beep sound is finished before saying your commands.
- Dialects or different wording other than Hands-Free prompts cannot be recognized by voice recognition. Speak in the wording specified by the voice commands.
- It is not necessary to face the microphone or approach it. Speak the voice commands while maintaining a safe driving position.
- Do not speak too slow or too loud.
- Speak clearly, without pausing between words or numbers.
- Close the windows and/or the moonroof to reduce loud noises from outside the vehicle.
- Turn down the airflow of the air-conditioning system while Bluetooth® Hands-Free is being used.
- Make sure the vents are not directing air up towards the microphone.

NOTE

If the voice recognition performance is not satisfactory.
Refer to Troubleshooting on page 6-145.

Bluetooth® Hands-Free

▼Making a Call

Phonebook Usage

Telephone calls can be made by saying the contact name in the downloaded phonebook or the name of a person whose phone number has been registered in the Bluetooth® Hands-Free. Refer to Import contact (Download Phonebook).

1. Press the pick-up button.
2. **Prompt:** “Ready”
3. **Say:** [Beep] “Call”
4. **Prompt:** “Name, please.”
5. **Say:** [Beep] “XXXXX... (Ex. “John”)” (Say a name registered in the phonebook.)
   The name spoken will be searched for in the phonebook.
   If a contact is matched, go to Step 7.
   If multiple contacts are matched, go to Step 6.
6. **Prompt:**
   “Would you like to call XXXXX... (Choice 1)?”
   (Person you would like to call)
   Say: [Beep] “Yes.” Then go to Step 7.
   (Person you do not want to call)
   Say: [Beep] “No” Then go to Step 6 (Maximum 3 times)
7. **Prompt:**
   “Would you like to call XXXXX... (Ex. “John”) at home, at work, or mobile, or other... or press the hang-up button to exit Hands-Free mode.”
8. **Say:** [Beep]
   “XXXXX... (Ex. “at home”)”

9. **Prompt:** “XXXXX... (Ex. “John”) XXXX (Ex. “at home”). Press the pick-up button to call, or say Go Back to enter a different name.”
10. **(Dialing)** Press the pick-up button or say “Call”. Then go to Step 11.
    (Name correction) Say, “Go Back”. Then go back to Step 4.
11. The call is made.

NOTE
The “Call” command, Name in the phonebook, and Location can be combined. Ex. In Step 3, say, “Call John's phone”, then, Steps 4 and 5 can be skipped.

Screen operation

1. Touch the [Phone Book] on-screen tab to display the phonebook screen.
2. Touch the contact you would like to call to display the details for the contact.
3. Touch the desired phone number to make the call.

Import contact (Download Phonebook)

Phonebook data from your device (Mobile phone) can be sent and registered to your Bluetooth® Hands-Free phonebook using Bluetooth®.

1. Touch the [Setup] on-screen tab.
2. Touch the [Download Phonebook] on-screen button.
3. Touch the [Single Contact] or [All Contacts] on-screen button to switch to the device operation.

NOTE
- *If the phonebook has been already registered to the Hands-Free unit, the current phonebook is overwritten during “all phonebooks download”.*
- *A maximum of 1000 contacts can be registered to the phonebook.*
- *Phonebook, incoming/outgoing call record, and speed dialing memory are exclusive to each mobile phone to protect privacy.*

4. Download will be started from the mobile phone.

Phonebook data deletion

1. Touch the [Phone Book] on-screen tab.
2. Touch the contact information which you want to delete.
3. Touch the [Delete] on-screen button.

Call History Usage

A call can be made using the call history (incoming/outgoing history) downloaded from the mobile phone (Redial/Call back). The call history is downloaded automatically when connecting or pairing the Hands-Free and mobile phone.

NOTE
If an anonymous call is received, the phone number displayed in the Incoming Call History may be random numbers. This is because a mobile phone sends random numbers to the vehicle. In this case, please be aware that the Redial and Call back functions below may not operate.

Redial Function

This voice command makes a call to the last person you called (either from your mobile phone or from the vehicle).

1. Press the pick-up button.

2. **Prompt:** “Ready”
3. **Say:** [Beep] “Redial”
4. A call is made to the most recent call in the Call history (outgoing).

Call back Function

This voice command makes a call to the last person who called you.

1. Press the pick-up button.
2. **Prompt:** “Ready”
3. **Say:** [Beep] “Call back”
4. A call is made to the most recent call in the Call history (incoming).

Speed Dial Function

A maximum of eight telephone numbers can be registered. It will take less time to make a call after registering the telephone number. In addition, you do not have to look for the person you want to call in the phonebook.

Speed Dial registration from phonebook

1. Touch the [Speed Dial] on-screen tab.
2. Touch the [(Add new)] on-screen button.
3. Touch the contact you would like to register to the speed dial.
4. Touch the telephone number you would like to register.
5. Verify that the registered name and telephone number are displayed in the phonebook, and touch the [Done ✓] on-screen button.

Making calls using the Speed Dial

1. Touch the [Speed Dial] on-screen tab.
2. Touch the contact information you would like to call.

Changing contact

1. Touch the [Speed Dial] on-screen tab.
2. Touch the [Edit] on-screen button.
3. Touch the [Add from Phonebook] on-screen button.
4. Touch the contact you would like to register to the speed dial.
5. Touch the telephone number you would like to register.
6. Verify that the registered name and telephone number are displayed in the phonebook, and touch the [Done ✓] on-screen button.

Speed Dial contact deleting

1. Touch the [Speed Dial] on-screen tab.
2. Touch the [Edit] on-screen button for the contact you would like to delete.
3. Touch the [Delete] on-screen button to display the confirmation screen.
4. Touch the [Yes] on-screen button.

Telephone Number Input

NOTE

Practice this while parked until you are confident you can do it while driving in a non-taxing road situation. If you are not completely comfortable, make all calls from a safe parking position, and only start driving when you can devote your full attention to driving.

1. Press the pick-up button.
2. **Prompt:** “Ready”
3. **Say:** [Beep] “Dial”
4. **Prompt:** “Number, please”

5. **Say:** [Beep]
   "XXXXXXXXXXX (Ex. "5551234") (Telephone number)"
6. **Prompt:**
   "XXXXXXXXXXX. (Ex "5551234") (Telephone number (first choice))"
7. **Prompt:**
   "Press the pick-up button to dial, or continue to add numbers. You can also say 'Option A' or 'Option B' to replace the last block of digits with the displayed alternate, or say 'Go Back' to delete the last block of digits."

NOTE
Option A is the second candidate, Option B is the third, and they may not be presented depending on the conditions.

8. **(Dialing)**
   Press the pick-up button or say, "Dial", then go to Step 9.
   (Adding/inputting telephone number)
   Say, "XXXX" (desired telephone number). Then go to Step 5.
   (The last recognized telephone number is replaced by Option A or B)
   Say, "Option A" or "Option B". Then go to Step 6.
   (Telephone number correction)
   Say, "Go Back". The prompt replies, "The last entered numbers have been removed". Then go back to Step 4 or Step 7.
9. The call is made.

NOTE
For the faster operation, the "Dial" command and a telephone number can be combined.
Ex. In Step 3, say, "Dial 1234567", then, Steps 4 and 5 can be skipped.

Screen operation

1. Input the telephone number using the numerical keypad.
2. Touch the [📞] on-screen button to make the call.

Numeral or symbol entry

Use the numerical keypad.
Long-press the [0+] on-screen button to input + .
Touch the [←] on-screen button to delete the currently input value.

Emergency calls

A call can be made to the emergency phone number (911: U.S.A/Canada, 066: Mexico) using the voice input command. It may not function properly in some areas in Mexico.

1. Press the pick-up button.
2. **Prompt:** "Ready"
3. **Say:** [Beep] "Emergency"
4. **Prompt:**
   "Press the Pick-Up button to dial the Emergency number."
5. (Dialing) Press the pick-up button or say "Call."
6. **Prompt:**
   "Dialing XXX (911: U.S.A/Canada, 066: Mexico)."

Automatic 911 (U.S.A./Canada only)

If the air bags are deployed, a call is made automatically to 911 from the connected device.

1. If the air bags are deployed, notification of the call made to 911 is made via audio and screen display. To cancel the call, press the Cancel on-screen button or hang-up button within 10 seconds.
2. If the Cancel on-screen button or hang-up button is not pressed within 10 seconds, the call is made to 911 automatically.

NOTE
A Hands-free device must be paired and connected. The 911 operator can verify the vehicle's position information using the Hands-free device GPS if equipped.
The 911 operator can verify the vehicle's position information.

(Switching automatic 911 on and off)

The system can be set to not call 911 if the air bags deploy.

⚠ CAUTION

Though the system can be set to not call 911, doing so will defeat the purpose of the system to immediately contact rescue personnel to assist you after your accident. For the safety of the driver and all passengers, Mazda recommends that the Automatic 911 system remain activated so that a call will be made to 911 when needed.

1. Touch the Setup on-screen tab.
2. Touch the Automatic 911 Call on-screen button.
3. Touch the On on-screen button or Off on-screen button.
4. Touch the Back on screen button.

▼Receiving an Incoming Call

1. **Prompt:**
   "Incoming call, press the pick-up button to answer"
2. To accept the call, press the pick-up button or touch the on-screen button.
   To reject the call, press the hang-up button or touch the on-screen button.

NOTE
To stop receiving phone calls, turn the Don't Disturb Me function on.

▼Hanging Up a Call

Press the hang-up button or touch the on-screen button during the call.

▼Mute

The microphone can be muted during a call.
Touch the MUTE on-screen button.
Touch the MUTE on-screen button during mute to cancel the mute.

▼Transferring a call from Hands-Free to a mobile phone

Communication between the Hands-Free unit and a device (Mobile phone) is canceled, and the line can be switched to the device (Mobile phone) as a standard call.
Touch the Transfer to Handset on-screen button.

NOTE
If the ignition is switched off during a Hands-Free call, the line is transferred to the device (Mobile phone) automatically.

▼Transferring a call from a device (mobile phone) to Hands-Free

Communication between devices (mobile phone) can be switched to Bluetooth® Hands-Free.
Touch the [Transfer to Vehicle] on-screen button.

▼Call interrupt

A call can be interrupted to receive an incoming call from a third party.
To switch to a new incoming call.
Touch the [☎] on-screen button or press the pick-up button on the steering wheel.

NOTE
- *After receiving a new incoming call, the previous call is placed on hold.*
- *Touch the [☎] on-screen button or press the hang-up button on the steering wheel to refuse a call.*

Switching between calls

Touch the [Swap Call] on-screen button or press the pick-up button on the steering wheel.

Three-way call function

Touch the [3-way Call] on-screen button.

▼DTMF (Dual Tone Multi-Frequency Signal) Transmission

This function is used when transmitting DTMF via the Numerical Keypad. The receiver of a DTMF transmission is generally a home telephone answering machine or a company's automated guidance call center.

1. Touch the [Number Pad] on-screen button after connecting to a home device or service to display the tone transmission screen.
2. Input the number using a numerical keypad.

NOTE
If the DTMF code has two or more digits or symbols, each one must be transmitted individually.

▼Receiving and Replying to Messages (only MAP 1.0)

SMS (Short Message Service) messages and MMS (Multimedia Messaging Service) messages received by a connected device can be downloaded, displayed, and played (read by the system).
Additionally, replies can also be made to calls and messages in the received messages.

Downloading messages

Up to 15 new messages can be downloaded and displayed from a connected device.

1. Touch the [Message] on-screen tab.
2. Touch the [Download Message] on-screen button.

NOTE
- *Messages that have not been read are downloaded first.*
- *Attached data is not downloaded.*
- *Messages up to 160-bytes can be downloaded.*
- *A message list is created for each device.*
- *If there are unread messages, the receive icon is displayed.*
- *If the connected device does not correspond to MAP 1.0, the AT command is used to download. The downloaded message indicates that it is already read.*
- *Downloading using the AT command may not function depending on the connected device.*

Receiving messages

When a device receives a message, a message received notification is displayed.
When the Download Now on-screen button is touched, the message is downloaded.

NOTE
To not display the message received notification, turn on the Don't Disturb Me function.

Displaying messages

1. Touch the Message on-screen tab.
2. Touch the message you want to display.

NOTE
- *Touch the Next on-screen button to display the next message, and press the Previous on-screen button to display the previous message.*
- *When the Read on-screen button is pressed, the message content is played (read by the system).*

Message playback

1. Touch the Message on-screen tab.
2. Touch the message you want to have played (read) back.
3. Touch the Read on-screen button.

NOTE
To stop the message playback, touch the Stop on-screen button.

Calling a person who sent a message

Calls can be made to persons sending SMS and MMS messages.

1. Touch the Message on-screen tab.
2. Touch the message to which you want to make a call.
3. Touch the on-screen button.

NOTE
Calls cannot be made to persons who have sent e-mail.

Replying to messages

Replies to received messages can be sent by selecting from the stored preset messages.

1. Touch the Message on-screen tab.
2. Touch the message to which you want to reply.
3. Touch the Reply on-screen button.
4. Select the sentence to be sent from the preset messages.
5. Press the Send on-screen button.

NOTE
The preset messages cannot be changed.

Erasing messages

Downloaded messages can be erased.

1. Touch the Message on-screen tab.
2. Touch the message you want to erase.
3. Touch the Delete on-screen button.
4. Touch the Yes on-screen button.

NOTE
The messages stored in a device cannot be erased.

▼Don't Disturb Me function

A setting can be made to not notify you of incoming phone calls and messages.

1. Touch the Setup on-screen tab.
2. Touch the Don't Disturb me on-screen button.
3. To set, touch the On on-screen button or the Off on-screen button.
4. Touch the Back on screen button.

NOTE
The following operations are possible even when the Don't Disturb Me function is on.
- *Downloading messages*
- *Downloading phone books*
- *Downloading the incoming/outgoing call record*
- *Sending messages*

▼Audio Operation Using Voice Recognition

Audio on/off, audio mode switching, and audio operations can be done using voice recognition.

NOTE
(When playing a USB or iPod)
When a track is selected using voice recognition, the track list is set to VR Playlist.

Starting the audio

The audio can be started using voice recognition.

1. Press the talk button.
2. **Prompt:** “Ready”
3. **Say:** [Beep] “Turn on audio”
4. Power to the audio is turned on.

Turning off the audio

1. Press the talk button.
2. **Prompt:** “Ready”
3. **Say:** [Beep] “Change mode”
4. **Prompt:** “Available audio modes are: AM, FM, FM1, FM2, Sirius, Sirius1, Sirius2, Sirius3, USB, iPod, Bluetooth® audio, Pandora®, CD, AUX, Turn off audio”
5. **Say:** [Beep] “Turn off audio”
6. Power to the audio is turned off.

Switching modes

1. Press the talk button.
2. **Prompt:** “Ready”
3. **Say:** [Beep] “Change mode”

4. **Prompt:** “Available audio modes are: AM, FM, FM1, FM2, Sirius, Sirius1, Sirius2, Sirius3, USB, iPod, Bluetooth® audio, Pandora®, CD, AUX, Turn off audio”
5. **Say:** [Beep] “XXX (Ex. “AM”) (audio source)”
6. The audio source is switched.

NOTE
CD, SIRIUS digital satellite radio, USB, iPod, BT audio, and Pandora® modes cannot be selected in the following cases:
- *SIRIUS digital satellite radio unit, USB device, iPod, BT audio, or Pandora® unit is not equipped on the audio system.*
- *CD has not been inserted.*

The AUX mode is locked out unless you connect a commercially available portable audio unit (such as an MP3 player) to the auxiliary jack. Connect a portable audio unit or similar product on the market to the auxiliary jack to listen to music or audio over the vehicle's speakers.

Playing selected track numbers

(When playing a CD)
A desired track number on a CD can be played using voice recognition.
Refer to Operating the Compact Disc (CD) Player on page 6-46.

1. Press the talk button.
2. **Prompt:** “Ready”
3. **Say:** [Beep] “Play track”
4. **Prompt:**
   “What track number would you like to play?”
5. **Say:** [Beep] “XXX (Ex. “15”) (Track number)”
6. The selected track number is played.

Playing selected artist

(When playing a USB or iPod)
Tracks from a desired artist on a USB device or iPod can be played using voice recognition.
Refer to How to use USB mode on page 6-56.Refer to How to use iPod mode on page 6-60.

1. Press the talk button.
2. **Prompt:** “Ready”
3. **Say:** [Beep] “Play”
4. **Prompt:**
   “Would you like to play by Artist, Album, Playlist, or Genre?”
5. **Say:** [Beep] “Artist”
6. **Prompt:**
   “What artist would you like to play?”
7. **Say:** [Beep]
   “XXXXX... (Ex. “Michael”) (Artist name)”
8. The name spoken will be searched for in the USB device or iPod.
   If a contact is matched, go to Step 10.
   If multiple contacts are matched, go to Step 9.
9. **Prompt:**
   “Would you like to play XXXXX... (Choice 1)?”
   (Artist you would like to play)
   Say: [Beep] “Yes.” Then go to Step 10.
   (Artist you do not want to play)
   Say: [Beep] “No.” Then go to Step 9.
   (Maximum 3 times)
10. The tracks for the selected artist are played.

Playing selected album

(When playing a USB or iPod)
The tracks from a desired album on a USB device or iPod can be played using voice recognition.
Refer to How to use USB mode on page 6-56.Refer to How to use iPod mode on page 6-60.

1. Press the talk button.
2. **Prompt:** “Ready”
3. **Say:** [Beep] “Play”
4. **Prompt:**
   “Would you like to play by Artist, Album, Playlist, or Genre?”
5. **Say:** [Beep] “Album”
6. **Prompt:**
   “What album would you like to play?”
7. **Say:** [Beep] “XXXXX... (Ex. “I am”) (Album name)”
8. The name spoken will be searched for in the USB device or iPod.
   If a contact is matched, go to Step 10.
   If multiple contacts are matched, go to Step 9.
9. **Prompt:**
   “Would you like to play XXXXX... (Choice 1)?”
   (Album you would like to play)
   Say: [Beep] “Yes.” Then go to Step 10.
   (Album you do not want to play)
   Say: [Beep] “No.” Then go to Step 9.
   (Maximum 3 times)
10. The tracks from the selected album are played.

Playing selected playlist

(When playing a USB or iPod)
The tracks from a desired playlist on a USB device or iPod can be played using voice recognition.
Refer to How to use USB mode on page 6-56.Refer to How to use iPod mode on page 6-60.

1. Press the talk button.
2. **Prompt:** “Ready”
3. **Say:** [Beep] “Play”.
4. **Prompt:**
   “Would you like to play by Artist, Album, Playlist, or Genre?”
5. **Say:** [Beep] “Playlist”
6. **Prompt:**
   “What playlist would you like to play?”
7. **Say:** [Beep]
   “XXXXX... (Ex. “My favorite”) (Playlist name)”
8. The name spoken will be searched for in the USB device or iPod.
   If a contact is matched, go to Step 10.
   If multiple contacts are matched, go to Step 9.
9. **Prompt:**
   “Would you like to play XXXXX... (Choice 1)?”
   (Playlist you would like to play)
   Say: [Beep] “Yes.” Then go to Step 10.
   (Playlist you do not want to play)
   Say: [Beep] “No.” Then go to Step 9.
   (Maximum 3 times)
10. The tracks from the selected playlist are played.

Playing selected genre

(When playing a USB or iPod)
Tracks from a desired genre on a USB device or iPod can be played using voice recognition.
Refer to How to use USB mode on page 6-56.Refer to How to use iPod mode on page 6-60.

1. Press the talk button.
2. **Prompt:** “Ready”
3. **Say:** [Beep] “Play”
4. **Prompt:**
   “Would you like to play by Artist, Album, Playlist, or Genre?”
5. **Say:** [Beep] “Genre”
6. **Prompt:**
   “What genre would you like to play?”
7. **Say:** [Beep] “XXXXX... (Ex. “Rock”) (Genre name)”
8. The name spoken will be searched for in the USB device or iPod.
   If a contact is matched, go to Step 10.
   If multiple contacts are matched, go to Step 9.
9. **Prompt:**
   “Would you like to play XXXXX... (Choice 1)?”
   (Genre you would like to play)
   Say: [Beep] “Yes.” Then go to Step 10.
   (Genre you do not want to play)
   Say: [Beep] “No.” Then go to Step 9.
   (Maximum 3 times)
10. Tracks from the selected genre are played.

Scan

(When playing a Radio, Sirius satellite radio, CD, or BT audio (AVRCP1.4))
The scan function for the radio, Sirius satellite radio, CD and BT audio (AVRCP1.4) can be launched using voice recognition.
Refer to Operating the Radio on page 6-34.
Refer to Operating the Satellite Radio on page 6-38.
Refer to Operating the Compact Disc (CD) Player on page 6-46.
Refer to How to Use the Bluetooth® Audio System on page 6-141.

1. Press the talk button.
2. **Prompt:** “Ready”
3. **Say:** [Beep] “Scan (or Scan Off)”
4. Scan is performed or stopped.

Mute

Muting of the audio can be done using voice recognition.

1. Press the talk button.
2. **Prompt:** “Ready”
3. **Say:** [Beep] “Mute (or Mute Off)”
4. Mute is performed or stopped.

Track search

(When playing a CD, USB, iPod, BT audio (AVRCP1.0/1.3/1.4))
The track up/down function can be run using voice recognition.
Refer to Operating the Compact Disc (CD) Player on page 6-46.
Refer to How to use USB mode on page 6-56.
Refer to How to use iPod mode on page 6-60.

Refer to How to Use the Bluetooth® Audio System on page 6-141.

Track up

1. Press the talk button.
2. **Prompt:** “Ready”
3. **Say:** [Beep] “Next track”
4. The next track is played.

Track down

1. Press the talk button.
2. **Prompt:** “Ready”
3. **Say:** [Beep] “Previous track”
4. The previous track is played.

Folder search

(When playing BT audio (AVRCP1.4))
The folder up/down function can be run using voice recognition.
Refer to How to Use the Bluetooth® Audio System on page 6-141.

Folder up

1. Press the talk button.
2. **Prompt:** “Ready”
3. **Say:** [Beep] “Next folder”
4. The next folder is played.

Folder down

1. Press the talk button.
2. **Prompt:** “Ready”
3. **Say:** [Beep] “Previous folder”
4. The previous folder is played.

Pause/Resume

(When playing a CD, USB, iPod, BT audio (AVRCP1.0/1.3/1.4), Pandora®)
Refer to Operating the Compact Disc (CD) Player on page 6-46.
Refer to How to use USB mode on page 6-56.
Refer to How to use iPod mode on page 6-60.
Refer to How to Use the Bluetooth® Audio System on page 6-141.
Refer to How to Use Pandora® on page 6-143.

Pause

1. Press the talk button.
2. **Prompt:** “Ready”
3. **Say:** [Beep] “Pause”
4. Playback is paused.

Resume playback

1. Press the talk button.
2. **Prompt:** “Ready”
3. **(When playing a CD, USB, iPod, BT audio (AVRCP1.0/1.3/1.4))**
   Say: [Beep] “Resume”
   (When playing Pandora®)
   Say: [Beep] “Play”
4. Playback is resumed.

Repeat

(When playing a CD, BT audio (AVRCP1.4))
The repeat function can be run using voice recognition.
Refer to Operating the Compact Disc (CD) Player on page 6-46.
Refer to How to Use the Bluetooth® Audio System on page 6-141.

(When playing a CD)

1. Press the talk button.
2. **Prompt:** “Ready”
3. **Say:** [Beep] “Repeat (or Repeat Off)”
4. Repeat is performed or stopped.

(When playing BT audio)

1. Press the talk button.
2. **Prompt:** “Ready”
3. **Say:** [Beep] “Repeat”
4. **Prompt:**
   “Available repeat options are Track , Folder, and Off”
5. **Say:** [Beep]
   “XXXXX (Track, Folder or Off)”
6. If “Track” is spoken, track repeat is performed.
   If “Folder” is spoken, folder repeat is performed.
   If “Off” is spoken, repeat is stopped.

Shuffle

(When playing a CD, BT audio (AVRCP1.4))
The shuffle function can be run using voice recognition.
Refer to Operating the Compact Disc (CD) Player on page 6-46.
Refer to How to Use the Bluetooth® Audio System on page 6-141.

(When playing a CD)

1. Press the talk button.
2. **Prompt:** “Ready”
3. **Say:** [Beep] “Shuffle (or Shuffle Off)”
4. Shuffle is performed or stopped.

(When playing BT audio)

1. Press the talk button.
2. **Prompt:** “Ready”
3. **Say:** [Beep] “Shuffle”
4. **Prompt:**
   “Available shuffle options are Folder , All, and Off”
5. **Say:** [Beep]
   “XXXXX (Folder, All or Off)”
6. If “Folder” is spoken, folder shuffle is performed.
   If “All” is spoken, device shuffle is performed.
   If “Off” is spoken, shuffle is stopped.

Switching between display/non-display of radio text information (U.S.A./ Canada only)

(When playing FM Radio)

Switching between display/non-display of radio text information is possible using voice recognition.
Refer to Operating the Radio on page 6-34.

1. Press the talk button.
2. **Prompt:** “Ready”
3. **Say:** [Beep]
   “Radio text (or Radio text OFF)”
4. Radio text information is displayed/not displayed.

Selection by specifying frequency

(When playing the Radio)

Selection by specifying the frequency is possible using voice recognition.

Refer to Operating the Radio on page 6-34.

1. Press the talk button.
2. **Prompt:** “Ready”
3. **Say:** [Beep] “Frequency”
4. **Prompt:**
   “What frequency would you like?”
5. **Say:** [Beep]
   “XXX (Ex. 610) (Frequency)”
6. The specified frequency is selected.

Seek tuning function

(When playing the Radio)
Seek tuning can be run using voice recognition.
Refer to Operating the Radio on page 6-34.

Seek up

1. Press the talk button.
2. **Prompt:** “Ready”
3. **Say:** [Beep] “Seek up”
4. Seek up is performed.

Seek down

1. Press the talk button.
2. **Prompt:** “Ready”
3. **Say:** [Beep] “Seek down”
4. Seek down is performed.

Auto memory seek function

(When playing the Radio)
The auto memory seek function can be run using voice recognition.
Refer to Operating the Radio on page 6-34.

1. Press the talk button.
2. **Prompt:** “Ready”
3. **Say:** [Beep] “Auto memory seek”
4. Auto memory seek is performed.

Auto memory preset function

(When playing the Radio)
Auto memory preset can be selected using voice recognition.
Refer to Operating the Radio on page 6-34.

1. Press the talk button.
2. **Prompt:** “Ready”
3. **Say:** [Beep] “Auto memory preset”
4. **Prompt:** “Number, please”
5. **Say:** [Beep]
   “X (Ex. 3) (Preset number)”
6. The specified preset is selected.

Preset switching

(When playing the Radio, Sirius satellite radio)
Radio stations programmed to the preset can be selected using voice recognition.
Refer to Operating the Radio on page 6-34.
Refer to Operating the Satellite Radio on page 6-38.

Specify the preset number and select

1. Press the talk button.
2. **Prompt:** “Ready”
3. **Say:** [Beep] “Preset”
4. **Prompt:**
   “Say a preset number between 1 and 6”
5. **Say:** [Beep]
   “X (Ex. 3) (Preset number)”
6. The specified preset is selected.

Next preset selection

(When playing the Radio)

1. Press the talk button.
2. **Prompt:** “Ready”
3. **Say:** [Beep] “Next preset”
4. The next preset is selected.

Previous preset selection

(When playing the radio)

1. Press the talk button.
2. **Prompt:** “Ready”
3. **Say:** [Beep] “Previous preset”
4. The previous preset is selected.

Switching channels

(When playing a Sirius satellite radio)
Selection of the channel to be received is possible using voice recognition.
Refer to Operating the Satellite Radio on page 6-38.

Select by specifying the channel number

1. Press the talk button.
2. **Prompt:** “Ready”
3. **Say:** [Beep] “Channel”
4. **Prompt:**
   “What channel number would you like?”
5. **Say:** [Beep]
   “XXX (Ex. 610) (Channel number)”
6. The specified channel is selected.

Selecting the next channel

1. Press the talk button.
2. **Prompt:** “Ready”
3. **Say:** [Beep] “Next channel”
4. The next channel is selected.

Selecting the previous channel

1. Press the talk button.
2. **Prompt:** “Ready”
3. **Say:** [Beep] “Previous channel”
4. The previous channel is selected.

Skip track function

(When playing Pandora®)
The skip track function can be run using voice recognition.
Refer to How to Use Pandora® on page 6-143.

1. Press the talk button.
2. **Prompt:** “Ready”
3. **Say:** [Beep] “Skip Track”
4. The next track is skipped.

Thumbs up function

(When playing Pandora®)
The thumbs up function can be run using voice recognition.
Refer to How to Use Pandora® on page 6-143.

1. Press the talk button.
2. **Prompt:** “Ready”
3. **Say:** [Beep] “Thumbs Up”
4. This tells Pandora® that you like this track and helps to bring in more tracks like it to your station.

Thumbs down function

(When playing Pandora®)
The thumbs down function can be run using voice recognition.

Refer to How to Use Pandora® on page 6-143.

1. Press the talk button.
2. **Prompt:** “Ready”
3. **Say:** [Beep] “Thumbs Down”
4. This tells Pandora® not to play this track.

Pandora® radio station selection

(When playing Pandora®)
A Pandora® radio station can be selected using voice recognition.
Refer to How to Use Pandora® on page 6-143.

1. Press the talk button.
2. **Prompt:** “Ready”
3. **Say:** [Beep] “Station”
4. **Prompt:** “Which Pandora® station you would like?”
5. **Say:** [Beep]
   “XXXXX... (Ex. “90’s classic”) (Station name)”
6. The system searches for the announced radio station.
   If a contact is matched, go to Step 8.
   If multiple contacts are matched, go to Step 7.
7. **Prompt:**
   “Would you like to play XXXXX... (Choice 1)?”
   (Station you would like to play)
   Say: [Beep] “Yes.” Then go to Step 8.
   (Station you do not want to play)
   Say: [Beep] “No.” Then go to Step 7.
   (Maximum 3 times)
8. The specified radio station is selected.

Bookmark function

(When playing Pandora®)
The bookmark function can be run using voice recognition.
Refer to How to Use Pandora® on page 6-143.

1. Press the talk button.
2. **Prompt:** “Ready”
3. **Say:** [Beep] “Bookmark”
4. **Prompt:**
   “Would you like to bookmark Track, or artist?”
5. **Say:** [Beep] “Track (or Artist)”
6. Track or artist is bookmarked.

▼Gracenote Database

The Gracenote media database is used to improve voice recognition of artist and album names with the Mazda Hands Free system. To make best use of the voice recognition, install the most recent database.

⚠ CAUTION

For information related to the most recent Gracenote database which can be used and how to install it, go to the Mazda Hands Free Website: http://www.mazdahandsfree.com

Introduction

Music recognition technology and related data are provided by Gracenote®. Gracenote is the industry standard in music recognition technology and related content delivery. For more information visit www.gracenote.com.

CD and music-related data from Gracenote, Inc., copyright © 2000 to present Gracenote. Gracenote Software, copyright © 2000 to present Gracenote. One or more patents owned by Gracenote apply to this product and service. See the Gracenote website for a non-exhaustive list of applicable Gracenote patents. Gracenote, CDDB, MusicID, MediaVOCS, the Gracenote logo and logotype, and the “Powered by Gracenote” logo are either registered trademarks or trademarks of Gracenote in the United States and/or other countries.

Gracenote® End User License Agreement
This application or device contains software from Gracenote, Inc. of Emeryville, California (“Gracenote”). The software from Gracenote (the “Gracenote Software”) enables this application to perform disc and/or file identification and obtain music-related information, including name, artist, track, and title information (“Gracenote Data”) from online servers or embedded databases (collectively, “Gracenote Servers”) and to perform other functions. You may use Gracenote Data only by means of the intended End-User functions of this application or device.
You agree that you will use Gracenote Data, the Gracenote Software, and Gracenote Servers for your own personal non-commercial use only. You agree not to assign, copy, transfer or transmit the Gracenote Software or any Gracenote Data to any third party. YOU AGREE NOT TO USE OR EXPLOIT GRACENOTE DATA, THE GRACENOTE SOFTWARE, OR GRACENOTE SERVERS, EXCEPT AS EXPRESSLY PERMITTED HEREIN.
You agree that your non-exclusive license to use the Gracenote Data, the Gracenote Software, and Gracenote Servers will terminate if you violate these restrictions. If your license terminates, you agree to cease any and all use of the Gracenote Data, the Gracenote Software, and Gracenote Servers. Gracenote reserves all rights in Gracenote Data, the Gracenote Software, and the Gracenote Servers, including all ownership rights. Under no circumstances will Gracenote become liable for any payment to you for any information that you provide. You agree that Gracenote, Inc. may enforce its rights under this Agreement against you directly in its own name.
The Gracenote service uses a unique identifier to track queries for statistical purposes. The purpose of a randomly assigned numeric identifier is to allow the Gracenote service to count queries without knowing anything about who you are. For more information, see the web page for the Gracenote Privacy Policy for the Gracenote service.
The Gracenote Software and each item of Gracenote Data are licensed to you “AS IS.” Gracenote makes no representations or warranties, express or implied, regarding the accuracy of any Gracenote Data from in the Gracenote Servers. Gracenote reserves the right to delete data from the Gracenote Servers or to change data categories for any cause that Gracenote deems sufficient. No warranty is made that the Gracenote Software or Gracenote Servers are error-free or that functioning of Gracenote Software or Gracenote Servers will be uninterrupted. Gracenote is not obligated to provide you with new enhanced or additional data types or categories that Gracenote may provide in the future and is free to discontinue its services at any time.
GRACENOTE DISCLAIMS ALL WARRANTIES EXPRESS OR IMPLIED, INCLUDING, BUT NOT LIMITED TO, IMPLIED WARRANTIES OF MERCHANTABILITY, FITNESS FOR A PARTICULAR PURPOSE, TITLE, AND NON-INFRINGEMENT. GRACENOTE DOES NOT WARRANT THE RESULTS THAT WILL BE OBTAINED BY YOUR USE OF THE GRACENOTE SOFTWARE OR ANY GRACENOTE SERVER. IN NO CASE WILL GRACENOTE BE LIABLE FOR ANY CONSEQUENTIAL OR INCIDENTAL DAMAGES OR FOR ANY LOST PROFITS OR LOST REVENUES.
© 2000 to present. Gracenote, Inc.

Updating the database

The Gracenote media database can be updated using USB device.

1. Connect a USB device containing the software for updating Gracenote.
2. Touch the Setup on-screen button.
3. Touch the Gracenote Update on-screen button.
4. Touch the Next on-screen button to scroll the display.
   When the display is scrolled to the end of the explanation, the Update Now on-screen button is displayed.
5. Touch the Update Now on-screen button. The update is initiated.
6. Touch the OK on-screen button.

NOTE

Do not switch the ignition off or disconnect the USB device while updating the database. Otherwise, data could be lost.

Bluetooth® Audio

Applicable Bluetooth® specification
Ver. 2.0 or higher

Response profile
- A2DP (Advanced Audio Distribution Profile) Ver. 1.0/1.2
- AVRCP (Audio/Video Remote Control Profile) Ver. 1.0/1.3/1.4

A2DP is a profile which transmits only audio to the Bluetooth® unit. If your Bluetooth® audio device corresponds only to A2DP, but not AVRCP, you cannot operate it using the control panel of the vehicle's audio system. In this case, the Bluetooth® audio device can be operated by controlling the device itself, the same as when a portable audio system without the Bluetooth® communication function is connected to the AUX terminal.

Function	A2DP	A2DP·AVRCP		
		Ver. 1.0	Ver. 1.3	Ver. 1.4
Playback	—	X	X	X
Pause	—	X	X	X
File (Track) up/down	—	X	X	X
Reverse	—	—	X	X
Fast-forward	—	—	X	X
Text display	—	—	X	X
Folder up/down	—	—	—	X
Repeat	—	—	—	X
Shuffle	—	—	—	X
Scan	—	—	—	X

X: Available
—: Not available

NOTE
- *To make sure that your Bluetooth® audio device is Ver. 1.0, 1.3 or 1.4, refer to the Owner's Manual for the Bluetooth® audio device.*
- *The battery consumption of Bluetooth® audio devices is higher while Bluetooth® is connected.*
- *If a general mobile phone device is USB connected during music playback over the Bluetooth® connection, the Bluetooth® connection is disconnected. For this reason, you cannot have music playback over a Bluetooth® connection and music playback using a USB connection at the same time.*
- *The system may not operate normally depending on the Bluetooth® audio device.*

▼How to Use the Bluetooth® Audio System

Switching to Bluetooth® audio mode

To listen to music or voice audio recorded to a Bluetooth® audio device, switch to the Bluetooth® audio mode to operate the audio device using the audio system control panel. Any Bluetooth® audio device must be programmed to the vehicle's Bluetooth® unit before it can be used.
Refer to Bluetooth® Preparation on page 6-118.

1. Switch the ignition to ACC or ON.
2. Turn on the Bluetooth® audio device's power.
   Make sure that the “ ⊛ ” symbol is displayed in the audio unit's display.

NOTE
Some Bluetooth® audio devices need a certain amount of time before the “ ⊛ ” symbol is displayed in the audio unit's display.

3. Press the audio button (AUDIO) and then touch the Bluetooth on-screen tab to switch to the Bluetooth® audio mode and start playback.

NOTE

- *If the Bluetooth® audio device does not begin playback, press the ▶/II on-screen button.*
- *If the mode is switched from Bluetooth® audio mode to another mode (radio mode), audio playback from the Bluetooth® audio device stops.*

Playback

1. To listen to a Bluetooth® audio device over the vehicle's speaker system, switch the mode to Bluetooth® audio mode. (Refer to “Switching to Bluetooth® audio mode”)
2. To stop playback, press the ▶/II on-screen button.
3. Press the button again to resume playback.

Selecting a file (track)

Selects the next file (track)

Short-press the track up button (⏭) or touch the ⏭ on-screen button.

Selects the beginning of the current file (track)

Short-press the track down button (⏮) or touch the ⏮ on-screen button.

Fast-forward/Reverse (AVRCP Ver. 1.3 or higher)

Fast-forward

Press and hold the fast-forward button (⏭) or touch and hold the ⏭ on-screen button.

Reverse

Press and hold the reverse down button (⏮) or touch and hold the ⏮ on-screen button.

Folder search (only AVRCP Ver. 1.4)

To change to the previous folder, touch the Previous on-screen button, or touch the Next on-screen button to advance to the next folder.

Music scan (only AVRCP Ver. 1.4)

This function scans the titles in a folder currently being played and plays 10 seconds of each song to aid you in finding a song you want to listen to.

1. Touch the Scan on-screen button during playback to play 10 seconds of each subsequent track starting from the next song.
2. Touch the Scan on-screen button again during playback of the song which you want to listen to continue the playback from that point.

Repeat playback (only AVRCP Ver. 1.4)

Track repeat

Touch the Repeat on-screen button to play the song during playback repeatedly. “♫ ” is displayed during playback.
Touch the Repeat on-screen button two times while “♫ ” is displayed to cancel.

Folder repeat

Touch the Repeat on-screen button two times to play the songs in the folder repeatedly. “🗀 ” is displayed during playback.
Touch the Repeat on-screen button while “🗀 ” is displayed to cancel.

Shuffle playback (only AVRCP Ver. 1.4)

Folder shuffle

Touch the Shuffle on-screen button during playback to play the songs in the folder shuffle. "🗀 " is displayed during playback.
Touch the Shuffle on-screen button two times while "🗀 " is displayed to cancel.

Device shuffle

Touch the Shuffle on-screen button two times during playback to play the songs in the device shuffle. "🗇 " is displayed during playback.
Touch the Shuffle on-screen button while "🗇 " is displayed to cancel.

Display scroll

If a whole title cannot be displayed at one time, touch the ▷ on-screen button on the right side of the title. When the last character is displayed, touch the ▷ on-screen button to display the first character of the title.

▼Bluetooth® audio device information display

If a Bluetooth® audio device is connected, the following information is displayed in the display.

	AVRCP Ver. lower than 1.3	AVRCP Ver. 1.3	AVRCP Ver. 1.4 or higher
Device name	X	X	X
Remaining battery charge of device	—	X	X
Title	—	X	X
Artist name	—	X	X
Album name	—	X	X
File number	—	X	X
Playback time	—	X	X
Folder number	—	—	X

NOTE
Some information may not display depending on the device, and if the information cannot be displayed, "No Song Name" is indicated.

▼How to Use Pandora®

What is Pandora®?

Pandora® is free personalized internet radio. Simply enter a favorite artist, track, genre, and Pandora® will create a personalized station that plays their music and more like it. Rate songs by giving thumbs-up and thumbs-down feedback to further refine your station, discover new music and help Pandora® play only music you love.

* Pandora®, the Pandora® logo, and the Pandora® trade dress are trademarks or registered trademarks of Pandora Media, Inc., used with permission.

NOTE
To operate Pandora® from your Bluetooth® device, perform the following in advance:
- *Create Pandora® account on the web.*
- *Create Pandora® station using Pandora® application.*
- *Install Pandora® application on your device.*

Playback

1. To listen to Pandora®, touch the Pandora on-screen tab.
2. To stop playback, press the ▶/II on-screen button.
3. Press the button again to resume playback.

Skip song

Press the ▶▶I on-screen button.

NOTE
- *The skip function may not be available depending on the device.*
- *The number of skips is limited by Pandora®.*

Selection from station list

Selection can be made from a programmed radio station list.

1. Press the Stations on-screen button.
2. Select the desired radio station.

NOTE
When QuickMix is selected, songs randomly selected from the radio station list are played.

Thumbs up function

Press the 👍 on-screen button to tell Pandora® "you like this track" and it helps to bring in more tracks like it to your station.

Thumbs down function

Press the 👎 on-screen button to tell Pandora® not to play this track.

NOTE
If the 👎 on-screen button is touched when the skip song function is running, the next song is skipped.

Bookmarking

You can bookmark song or artist to check out later on the Web.

Bookmark the song name

Press the 🔖 on-screen button on the right side of the song name.

Bookmark the artist name

Press the 🔖 on-screen button on the right side of the artist name.

Display scroll

If a whole title cannot be displayed at one time, touch the ▷ on-screen button on the right side of the title.
When the last character is displayed, touch the ▷ on-screen button to display the first character of the title.

Troubleshooting

Bluetooth® does not operate under the following conditions. Check whether the following conditions apply to your Bluetooth® device:

- The device is not being operated correctly.
- The device is not connected to the Bluetooth® unit equipped on the vehicle.
- The device's battery is weak.
- A device which interferes with radio wave reception has been placed in the vehicle.
- The ignition switch has been turned off.

If none of the above conditions apply, refer to the following to see if any of the problem symptoms correspond to your device.
If the problem cannot be resolved, consult an Authorized Mazda Dealer or Mazda Bluetooth® Hands-Free Customer Service.

Mazda Bluetooth® Hands-Free Customer Service

If you have any problems with Bluetooth®, contact with our toll-free customer service center.

- **U.S.A.**
  Phone: 800-430-0153 (Toll-free)
  Web: www.MazdaUSA.com/bluetooth
- **Canada**
  Phone: 800-430-0153 (Toll-free)
  Web: www.mazdahandsfree.ca
- **Mexico**
  Center of Attention to Client (CAC)
  Phone: 01-800-01-MAZDA (Toll-free)
  Web: www.mazdamexico.com.mx

Device pairing, connection problems

Symptom	Cause	Solution method
Unable to perform pairing	—	First make sure the device is compatible with the Bluetooth® unit, and then check whether the Bluetooth® function and the Find Mode/Visible setting*1 on the device are turned on. If pairing is still not possible after this, contact an Authorized Mazda Dealer or Mazda Bluetooth® Hands-Free Customer Service.
Unable to perform pairing	The Bluetooth® function and the Find Mode/Visible setting*1 on the device may turn off automatically after a period of time has elapsed depending on the device.	Check whether the Bluetooth® function and the Find Mode/Visible setting*1 on the device are turned on and pairing or reconnect.
Does not connect automatically when starting the engine		
Automatically connects, but then disconnects suddenly		
Disconnects intermittently	The device is in a location in which radio wave interference can occur easily, such as inside a bag in a rear seat, in a rear pocket of a pair of pants.	Move the device to a location in which radio wave interference is less likely to occur.

*1 Setting which detects the existence of a device external to the Bluetooth® unit

Voice recognition related problems

Symptom	Cause	Solution method
Poor voice recognition False recognition of numbers	• Excessive, slow speech. • Excessive, forceful speech (shouting). • Speaking before the beep sound has ended. • Loud noise (speaking or noise from outside/ inside vehicle). • Airflow from A/C is blowing against the microphone. • Speaking in off-standard expressions (dialect).	Regarding the causes indicated on the left, be careful with how you speak. In addition, when numbers are spoken in a sequence, recognition ability will improve if no stop is placed between the numbers.
Names in the phonebook are not easily recognized	The Bluetooth® system is under a condition in which recognition is difficult.	By carrying out the following measures, the rate of recognition will improve. • Clear memory from the phonebook which is not used very often. • Avoid shortened names, use full names. (Recognition improves the longer the name is. By not using names such as “Mom”, “Dad”, recognition will improve.)
You want to skip guidance	—	Guidance can be skipped by quickly pressing and releasing the Talk button.
When the Talk button is pressed, voice recognition ends	The Talk button is pressed for too long.	Operate the Talk button as follows: • Press the button and release it within 0.7 seconds to start voice recognition and skip the guidance. • Press the button for longer than 0.7 seconds to turn off voice recognition or end a conversation.

Regarding problems with calls

Symptom	Cause	Solution method
When starting a call, vehicle noise from the other party can be heard	For about three seconds after starting a call, the Bluetooth® unit's Noise Suppression function requires time to adapt to the call environment.	This does not indicate a problem with the device.
The other party cannot be heard or the speaker's voice is quiet	The volume is set at zero or low.	Increase the volume.

Other problems

Symptom	Cause	Solution method
The indication for the remaining battery is different between the vehicle and the device	The indication method is different between the vehicle and the device.	—
When a call is made from the vehicle, the telephone number is updated in the incoming/outgoing call record but the name does not appear	The number has not been registered into the phonebook.	If the number has been registered into the phonebook, the incoming/outgoing call record is updated by the name in the phonebook when the engine is restarted.
The cell phone does not synchronize with the vehicle regarding the incoming/outgoing call record	Some types of cell phones do not synchronize automatically.	Operate the cell phone for synchronization.
It takes a long time to complete the function for changing the language	A maximum of 60 seconds is required.	—

Safety Certification

FCC
FCC: CB2MAZGEN6HFT

NOTE
This device complies with Part 15 of the FCC Rules. Operation is subject to the following two conditions:
(1) This device may not cause harmful interference, and
(2) This device must accept any interference received, including interference that may cause undesired operation.

⚠ WARNING

Changes or modifications made to this equipment not expressly approved by the manufacturer may void the FCC authorization to operate this equipment.

NOTE
This equipment has been tested and found to comply with the limits for a Class B digital device, pursuant to Part 15 of the FCC Rules. These limits are designed to provide reasonable protection against harmful interference in a residential installation. This equipment generates, uses and can radiate radio frequency energy and, if not installed and used in accordance with the instructions, may cause harmful interference to radio communications. However, there is no guarantee that interference will not occur in a particular installation. If this equipment does cause harmful interference to radio or television reception, which can be determined by turning the equipment off and on, the user is encouraged to try to correct the interference by one or more of the following measures:
- *Reorient or relocate the receiving antenna.*
- *Increase the separation between the equipment and receiver.*
- *Connect the equipment into an outlet on a circuit different from that to which the receiver is connected.*
- *Consult the dealer or an experienced radio/TV technician for help.*

IC
IC:279B-MAZGEN6HFT
Licence exempt
This device complies with Industry Canada licence-exempt RSS standard(s). Operation is subject to the following two conditions:
(1) This device may not cause interference, and
(2) This device must accept any interference, including interference that may cause undesired operation of the device.

The term “IC: ” before the radio certification number only signifies that Industry Canada technical specifications were met. The antenna used for this transmitter must not be co-located or operating in conjunction with any other antenna or transmitter. End-users and installers must be provided with installation instructions and transmitter operating conditions for satisfying RF exposure compliance.

Rear View Monitor*

The rear view monitor is a visual assist system when reversing the vehicle that provides images from the rear of the vehicle.

WARNING

The rear view monitor is only a visual assist device when reversing the vehicle. The images on the screen may be different from the actual conditions. Always drive carefully confirming the safety of the rear and the surrounding conditions by looking directly with your eyes. Reversing the vehicle by only looking at the screen may cause an accident or a collision with an object.

CAUTION

- *Do not use the rear view monitor under the following conditions: Using the rear view monitor under the following conditions is dangerous and could result in injury or vehicle damage or both.*
  - *Icy or snow-covered roads.*
  - *Tire chains or a temporary spare tire is installed.*
  - *The liftgate is not fully closed.*
  - *The vehicle is on a road incline.*
- *When the display is cold, images may course across the monitor or the screen and may be dimmer than usual, which could cause difficulty in confirming the surrounding conditions of the vehicle. Always drive carefully confirming the safety of the rear and the surrounding conditions by looking directly with your eyes.*
- *Do not apply excessive force to the camera. The camera position and angle may deviate.*
- *Do not disassemble, modify, or remove it as it may no longer be waterproof.*
- *The camera cover is made of plastic. Do not apply degreasing agents, organic solvents, wax, or glass coating agents to the camera cover. If any are spilled on the cover, wipe off with a soft cloth immediately.*
- *Do not rub the cover excessively, or polish it using an abrasive compound or a hard brush. The cover may be damaged affecting the image.*

NOTE

- *If water, snow, or mud is stuck on the camera lens, wipe it off using a soft cloth. If it cannot be wiped off, use a mild detergent.*
- *If the camera temperature changes rapidly, such as by pouring hot water on it under cold temperature conditions, the rear view monitor may not operate correctly.*
- *When replacing the tires, consult an Authorized Mazda Dealer. Replacing the tires could result in deviation of the guide lines which appear on the display.*
- *If the vehicle's front, side, or rear has been involved in a collision, the alignment of the rear view parking camera (location, installation angle) may have deviated. Always consult an Authorized Mazda Dealer to have the vehicle inspected.*
- ***(With navigation system)***
  The screen may not change to the camera image while the navigation system is being activated immediately after the vehicle battery has been connected. If this occurs, activate the rear-view monitor camera again soon after the navigation system.

▼Rear View Parking Camera Location

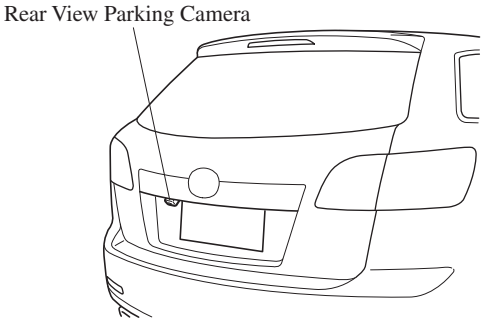

▼Switching to the Rear View Monitor Display

Shift the shift lever to R with the ignition switched ON to switch the display to the rear view monitor display.

NOTE

When the shift lever is shifted from R to another shift lever position, the screen returns to the previous display.

▼Displayable Range on the Screen

The images on the screen may be different from the actual conditions.

(Screen display)

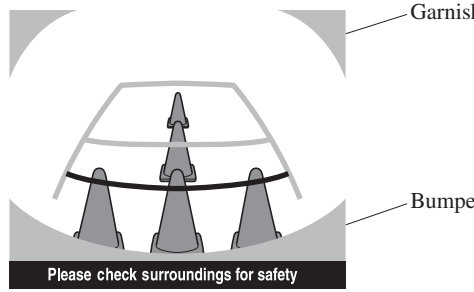

(Actual view)

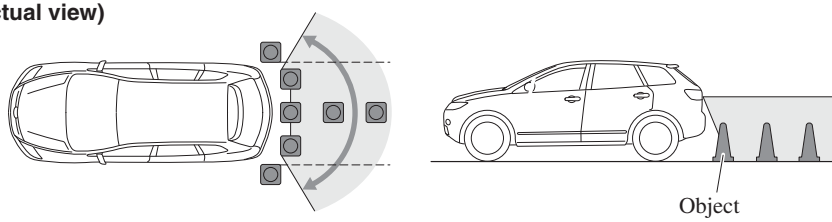

NOTE

- *The displayable range varies depending on the vehicle and road conditions.*
- *The displayable range is limited. Objects under the bumper or around the bumper ends cannot be displayed.*
- *The distance appearing in the displayed image is different from the actual distance because the rear view parking camera is equipped with a specific lens.*
- *Some optionally installed vehicle accessories may be picked up by the camera. Do not install any optional parts that can interfere with the camera view, such as illuminating parts or parts made of reflective material.*
- *It may be difficult to see the display under the following conditions, however, it does not indicate a malfunction.*
  - *In darkened areas.*
  - *When the temperature around the lens is high/low.*
  - *When the camera is wet such as on a rainy day or during periods of high humidity.*
  - *When foreign material such as mud is stuck around the camera.*
  - *When the camera lens reflects sunlight or headlight beams.*
- *Image display may be delayed if the temperature around the camera is low.*

▼Viewing the Display

Guide lines which indicate the width of the vehicle (yellow) are displayed on the screen as a reference to the approximate width of the vehicle in comparison to the width of the parking space you are about to back into.
Use this display view for parking your vehicle in a parking space or garage.

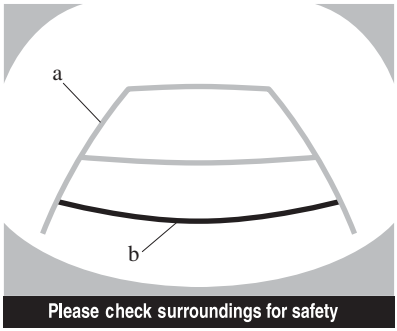

a) Vehicle width guide lines (yellow)
Guide lines serve as a reference to the approximate width of the vehicle.
b) Distance guide lines
These guide lines indicate the approximate distance to a point measured from the vehicle's rear (from the end of the bumper).
The red and yellow lines indicate the points about 50 cm (20 in) (red) and 1 m (3 ft) (yellow) from the rear bumper (at the center point of each of the lines).

⚠ CAUTION

The guide lines on the screen are fixed lines. They are not synced to the driver's turning of the steering wheel. Always be careful and check the area to the vehicle's rear and the surrounding area directly with your eyes while backing up.

▼Rear View Monitor Operation

The operation of the rear view monitor when reversing the vehicle varies depending on the traffic, road, and vehicle conditions. The amount of steering and the timing also varies depending on conditions, so confirm the surrounding conditions directly with your eyes and steer the vehicle in accordance with the conditions.
Be well aware of the above cautions prior to using the rear view monitor.

NOTE
Images displayed on the monitor from the rear view parking camera are reversed images (mirror images).

1. Shift the shift lever to R to switch the display to the rear view monitor display.
2. Confirming the surrounding conditions, reverse the vehicle.

(Display condition)

(Vehicle condition)

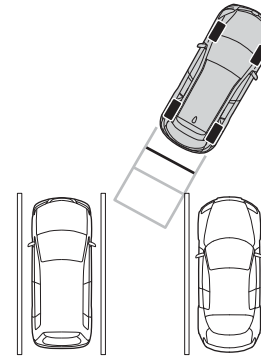

3. After your vehicle begins entering the parking space, continue backing up slowly so that the distance between the vehicle width lines and the sides of the parking space on the left and right are roughly equal.
4. Continue to adjust the steering wheel until the vehicle width guide lines are parallel to the left and right sides of the parking space.

5. Once they are parallel, straighten the wheels and back your vehicle slowly into the parking space. Continue checking the vehicle's surroundings and then stop the vehicle in the best possible position. (If the parking space has division lines, check whether the vehicle width guide lines are parallel to them.)

(Display condition)

(Vehicle condition)

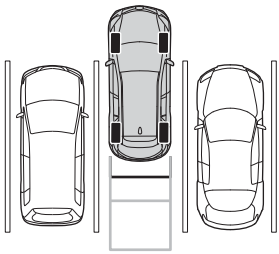

6. When the shift lever is shifted from R to another shift lever position, the screen returns to the previous display.

NOTE

Because there may be a difference between the displayed image, such as indicated below, and the actual conditions when parking, always verify the safety at the rear of the vehicle and the surrounding area directly with your eyes.

- *In the image of the parking space (or garage) displayed below, even though the back end and distance guide lines appear parallel in the monitor, they may not actually be parallel on the ground.*
- *When parking in a space with a division line on only one side of the parking space, the division line and the vehicle width guide line may appear parallel on the monitor, but they may not actually be parallel on the ground.*

▼Variance Between Actual Road Conditions and Displayed Image

Some variance occurs between the actual road and the displayed road. Such variance in distance perspective could lead to an accident. Note the following conditions that may cause a variance in distance perspective.

When the vehicle is tilted due to the weight of passengers and load

When the vehicle rear is lowered, the object displayed on the screen appears farther than the actual distance.

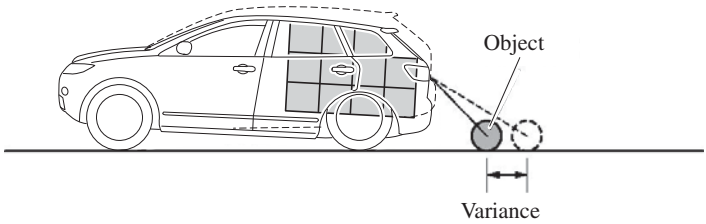

When there is a steep grade behind the vehicle

When there is a steep upgrade (downgrade) behind the vehicle, the object displayed on the screen appears farther (downgrade: closer) than the actual distance.

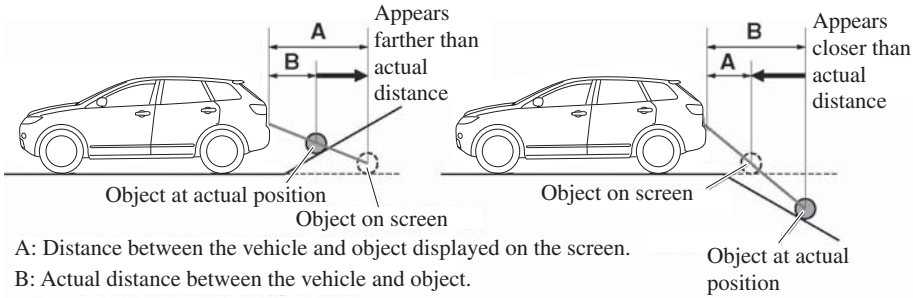

Three-dimensional object on vehicle rear

Because the distance guide lines are displayed based on a flat surface, the distance to the three-dimensional object displayed on the screen is different from the actual distance.

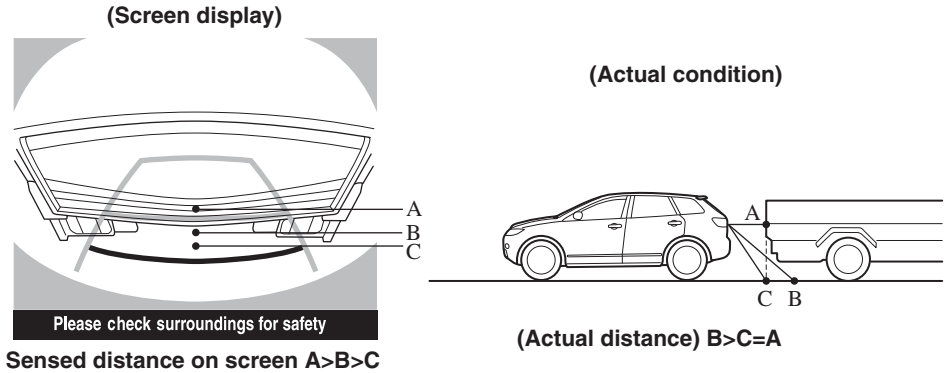

▼Image Quality Adjustment

⚠ WARNING

Always adjust the picture quality of the rear view monitor while the vehicle is stopped:

Do not adjust the picture quality of the rear view monitor while driving the vehicle. Adjusting the picture quality of the rear view monitor such as brightness, contrast, color, and tint while driving the vehicle is dangerous as it could distract your attention from the vehicle operation which could lead to an accident.

Picture quality adjustment can be done while the shift lever is in reverse (R).
There are four settings which can be adjusted including, brightness, contrast, color, and tint. When adjusting, pay sufficient attention to the vehicle surroundings.

1. Press the setup button (**SETUP**) to display the picture quality adjustment screen.
2. Touch the [+] and [−] on-screen buttons to change the set value.

Touch the [Back] on-screen button to return to the camera image display.

Reset

All of the screen setting values can be reset to their initial settings.

1. Press the setup button (**SETUP**) to display the picture quality adjustment screen.
2. Touch the Reset on-screen button.
3. Touch the Yes on-screen button.

Sunvisors

When you need a sunvisor, lower it for use in front or swing it to the side.

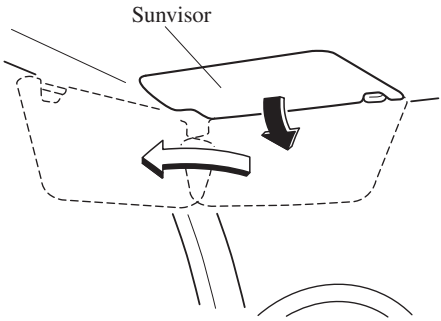

▼Side Extension Sunvisors

The visor extender extends the sunvisor's range of sun shading.
To use, pull it out.

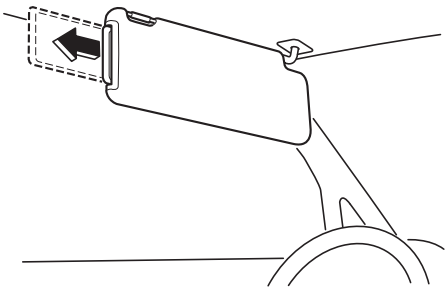

⚠ CAUTION

When moving the sunvisor, retract the visor extender to its original position. Otherwise, the visor extender could hit the rearview mirror.

▼Vanity Mirrors

To use the vanity mirror, lower the sunvisor.
The vanity mirror light will illuminate when you open the cover.

Interior Lights

▼Illuminated Entry System

When the illuminated entry system operates, the overhead light (switch is in the DOOR position)and the courtesy lights turn on for:

- About 30 seconds after the driver's door is unlocked and the ignition is switched off (with the ignition key removed).
- About 15 seconds after all doors are closed.
  (With Advanced key)
  About 5 seconds after all doors are closed when the advanced key is outside of the vehicle.
- About 15 seconds after the ignition is switched off (with the ignition key removed) with all doors closed.

The light also turns off when:

- The ignition is switched ON and all doors are closed.
- The driver's door is locked.

NOTE

Battery saver

If any door is left opened, the light turns off after about 30 minutes to save the battery. The light turns on again when the ignition is switched ON, or when any door is opened after all doors have been closed.

▼Overhead Lights

When the center/rear overhead light switch is in the DOOR position, the center/rear overhead light can be turned on or off using the front overhead light switch.

Front

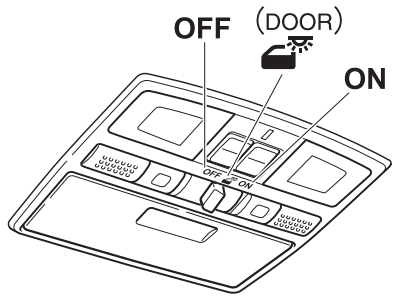

Switch Position	Overhead Lights
OFF	• Light off • All overhead lights are off when the center/rear overhead light switch is in the DOOR position
DOOR	• Light is on when any door is open • Light is on or off when the illuminated entry system is on
ON	• Light on • All overhead lights are on when the center/rear overhead light switch is in the DOOR position

Center/Rear

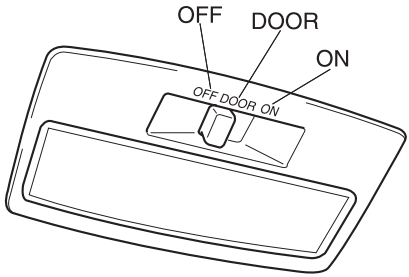

Switch Position	Overhead Lights
OFF	Light off
DOOR	Light on or off in accordance with the operation of front overhead light switch
ON	Light on

▼Map Lights

The map lights are switched on or off by pressing the switches.

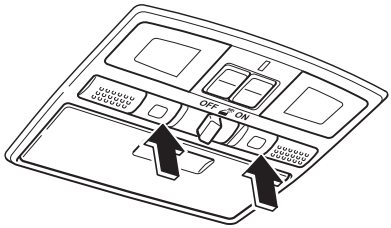

▼Luggage Compartment Light

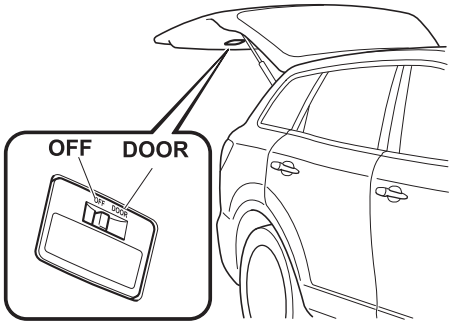

Switch Position	Luggage Compartment Light
OFF	Light off
DOOR	Light on when the liftgate is open

▼Courtesy Lights

Turns on when any door is open or the illuminated entry system is on.

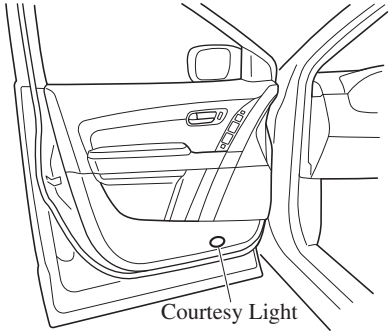

Information Display

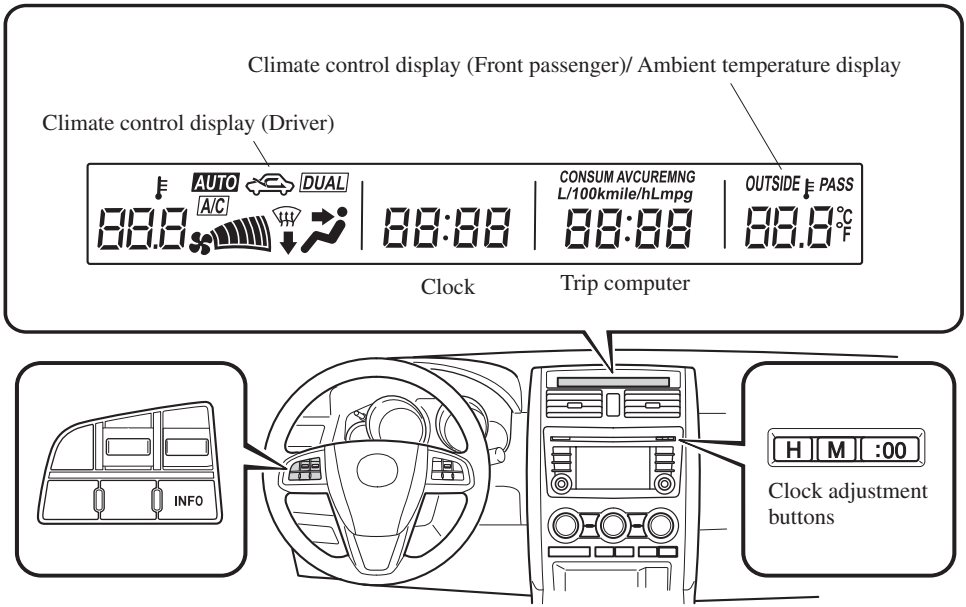

▼Information Display Functions

The information display has the following functions:

- Clock
- Ambient Temperature Display (Outside Temperature Display)
- Climate Control Display
- Trip Computer

▼Clock

When the ignition is switched to ACC or ON, the time is displayed.

Time setting

1. Switch the ignition to ACC or ON.
2. Adjust the time using the time setting buttons (H , M).
   The hours advance while the time setting button (H) is pressed.
   The minutes advance while the time setting button (M) is pressed.

Time resetting

1. Switch the ignition to ACC or ON.
2. Press the :00 button.
3. When the button is released, the time will be reset as follows:

(Example)
12:01—12:29→12:00
12:30—12:59→1:00

NOTE
When the button is released, the seconds will start at "00".

▼Ambient Temperature Display

When the ignition is switched ON, press the OUTSIDE switch (page 6-6) to display the ambient temperature.

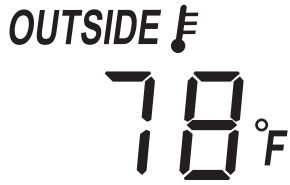

NOTE
- *Under the following conditions, the ambient temperature display may differ from the actual ambient temperature depending on the surroundings and vehicle conditions:*
  - *Significantly cold or hot temperatures.*
  - *Sudden changes in ambient temperature.*
  - *The vehicle is parked.*
  - *The vehicle is driven at low speeds.*
- *Press the OUTSIDE switch for a few seconds or more to switch the display from Fahrenheit to Centigrade or vice versa.*
- *Press the OUTSIDE switch again to switch the display from ambient temperature to the temperature set for the air conditioner.*

▼Climate Control Display

The climate control system status is displayed. To operate the climate control system, refer to "Climate Control System" (page 6-2).

▼Trip Computer

The trip computer can display the following:
- The current fuel economy.
- The average fuel economy.
- The approximate distance you can travel on the available fuel.
- The average vehicle speed.

Switch the ignition ON.
Press the INFO switch to change the display mode.
If you have any problems with your trip computer, consult an Authorized Mazda Dealer.

Current fuel economy mode

This mode displays the current fuel economy by calculating the amount of fuel consumption and the distance traveled.

Current fuel economy will be calculated and displayed every 2 seconds.

When this mode is selected, CONSUM CUR will be displayed.
U.S.A.

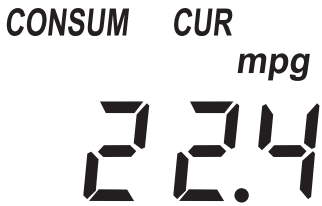

CANADA

When you've slowed to about 5 km/h (3 mph), - - - L/100 km (- - -mpg) will be displayed.

Average fuel economy mode

This mode displays the average fuel economy by calculating the total fuel consumption and the total traveled distance since purchasing the vehicle, re-connecting the battery after disconnection, or resetting the data. The average fuel economy is calculated and displayed every minute.

When this mode is selected, CONSUM AV will be displayed.
U.S.A.

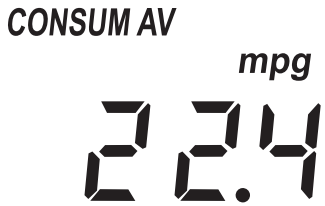

CANADA

To clear the data being displayed, press the INFO switch for more than 1.5 second.
After pressing the INFO switch, - - - L/100 km (- - - mpg) will be displayed for about 1 minute before the fuel economy is recalculated and displayed.

Distance-to-empty mode

This mode displays the approximate distance you can travel on the remaining fuel based on the fuel economy.

The distance-to-empty will be calculated and displayed every second.

When this mode is selected, REMNG will be displayed.
U.S.A.

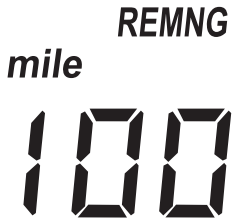

CANADA

NOTE

- *Even though the distance-to-empty display may indicate a sufficient amount of remaining mileage before refueling is required, refuel as soon as possible if the fuel gauge needle nears E or the low fuel warning light illuminates.*
- *The display won't change unless you add more than approximately 20 L (5.3 US gal, 4.5 Imp gal) of fuel.*

Average vehicle speed mode

This mode displays the average vehicle speed by calculating the distance and the time traveled since connecting the battery or resetting the data.
Average vehicle speed will be calculated and displayed every 10 seconds.

When this mode is selected, AV will be displayed.

U.S.A.

CANADA

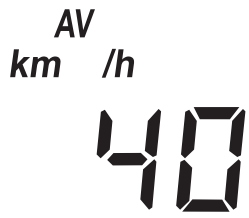

To clear the data being displayed, press the INFO switch for more than 1.5 second. After pressing the INFO switch, - - - km/h (- - - mile/h) will be displayed for about 1 minute before the vehicle speed is recalculated and displayed.

Cup Holder

WARNING

Never use a cup holder to hold hot liquids while the vehicle is moving:

Using a cup holder to hold hot liquids while the vehicle is moving is dangerous. If the contents spill, you could be scalded.

Do not put anything other than cups or drink cans in cup holders:

Putting objects other than cups or drink cans in a cup holder is dangerous.
During sudden braking or maneuvering, occupants could be hit and injured, or objects could be thrown around the vehicle, causing interference with the driver and the possibility of an accident. Only use a cup holder for cups or drink cans.

CAUTION

To reduce the possibility of injury in an accident or a sudden stop, keep cup holders closed when not in use.

▼Front

To use the cup holder, push the release button.

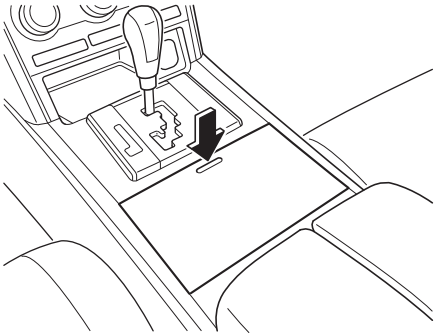

To fit small items in the cup holder, remove the flexible divider.

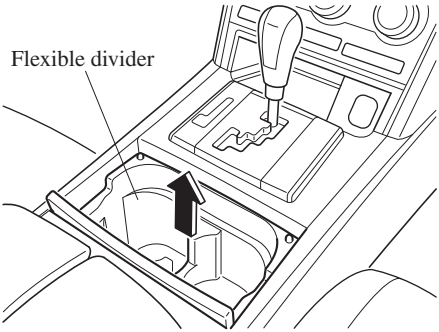

▼Rear

Second-row seat

Cup holders are located in the armrest.

Third-row seat

Cup holders are located in the third-row seat side trims.

Right-side

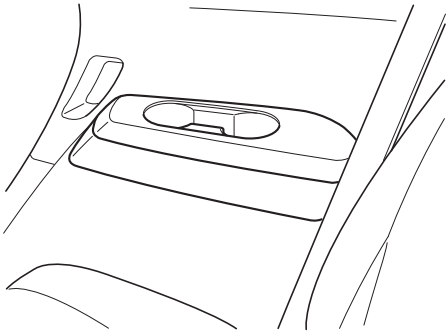

Left-side *

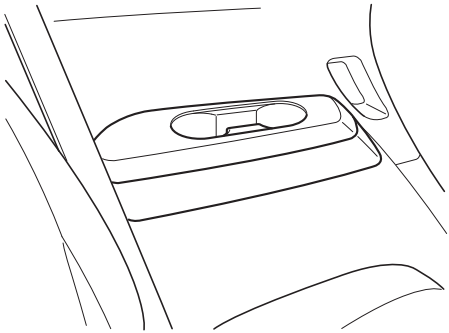

Bottle Holder

Bottle holders are on the inside of the doors.

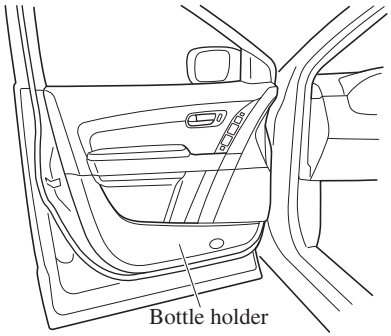

CAUTION

Do not use the bottle holders for containers without caps. The contents may spill when the door is opened or closed.

Storage Compartments

WARNING

Keep storage boxes closed when driving:

Driving with the storage boxes open is dangerous. To reduce the possibility of injury in an accident or a sudden stop, keep the storage boxes closed when driving.

Do not put articles in storage spaces with no lid:

Putting articles in storage spaces with no lid is dangerous as they could be thrown around the cabin if the vehicle is suddenly accelerated and cause injury depending on how the article is stored.

CAUTION

Do not leave lighters or eyeglasses in the storage boxes while parked under the sun. A lighter could explode or the plastic material in eyeglasses could deform and crack from high temperature.

▼Overhead Console

This console box is designed to store accessories.
Push and release to open.

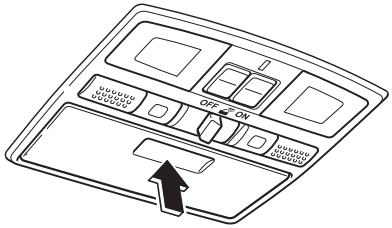

▼Glove Compartment

To open the glove compartment, pull the latch toward you.

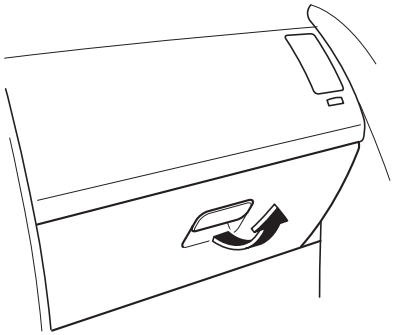

To close the glove compartment, firmly press in the center of the glove compartment lid.

▼Center Console

To open, push the button.

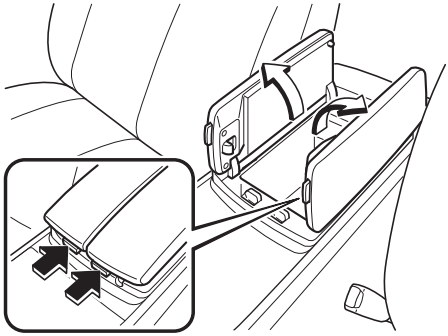

▼Armrest Box*

To open, pull the release catch.

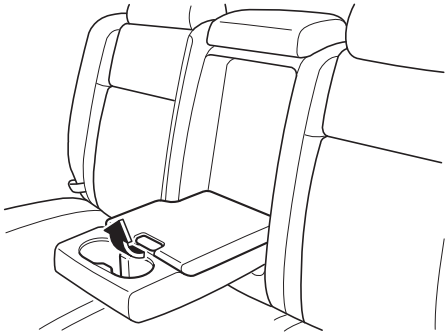

▼Cargo Securing Loops

⚠ WARNING

Make sure luggage and cargo are secured before driving:

Not securing cargo while driving is dangerous as it could move or be crushed during sudden braking or a collision and cause injury.

Use the loops in the luggage compartment to secure cargo with a rope or net. The tensile strength of the loops is 196 N (20 kgf, 44 lbf). Do not apply excessive force to the loops as it will damage them.

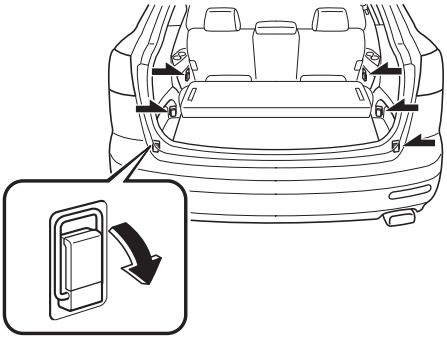

▼Cargo Sub-Compartment

Center cargo sub-compartment

1. Lift the trunk board.

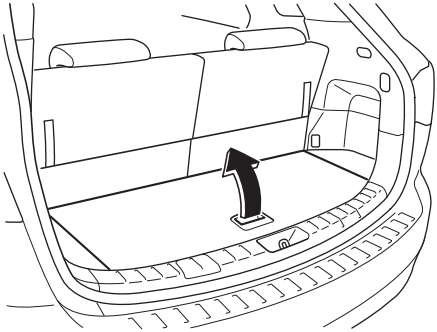

2. Secure the trunk board using the straps on the third-row seatbacks.

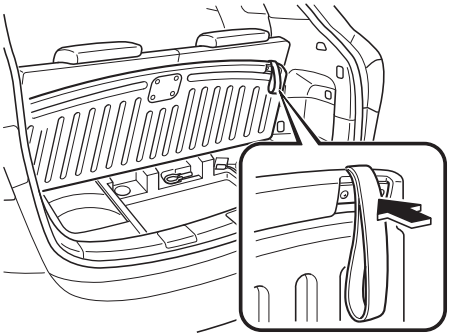

Side cargo sub-compartment

Open the cover.

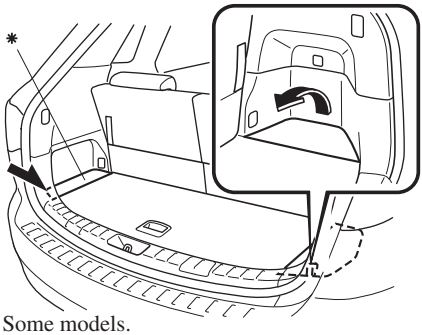

* Some models.

▼Shopping Bag Hook

The shopping bag hook can be used for hanging shopping bags.

⚠ CAUTION

Do not hang excessive weight on the shopping bag hook as it could be damaged.

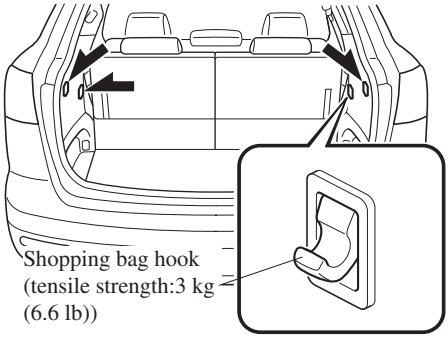

▼Rear Coat Hooks

⚠ WARNING

Never hang heavy or sharp objects on the assist grips and coat hooks:

Hanging heavy or sharp-ended objects such as a coat hanger from the assist grips or coat hooks is dangerous as they can fly off and hit an occupant in the cabin if a curtain air bag was to deploy, which could result in serious injury or death.

Always hang clothes on the coat hooks and the assist grips without hangers.

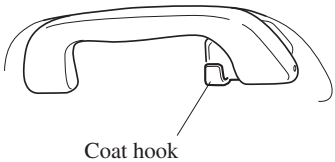

▼Luggage Compartment

Golf bags can be carried in the luggage compartment.
To carry two golf bags, use the following procedure:

1. Put one golf bag in the luggage compartment with its top pointing to the left.

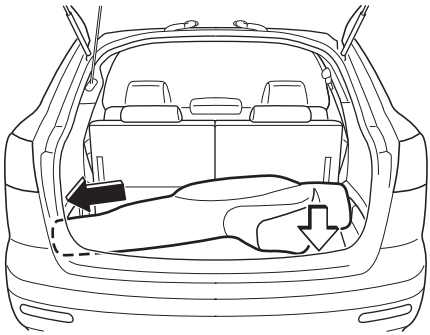

2. Put the other golf bag on top of the first bag with its top pointing to the right.

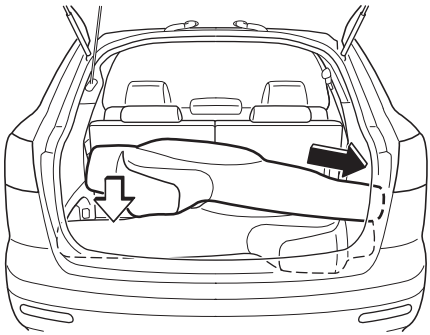

NOTE

- *Some golf bags cannot fit depending on their size.*
- *Golf bags up to nine inches in diameter can be carried.*

Accessory Sockets

Only use genuine Mazda accessories or the equivalent requiring no greater than 120 W (DC 12 V, 10 A).

Front

The ignition must be switched to ACC or ON.

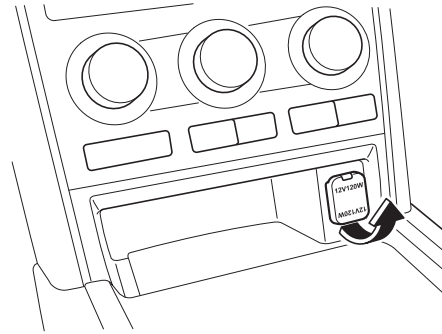

Center/Rear

The accessory sockets can be used regardless of whether the ignition is on or off.

Center

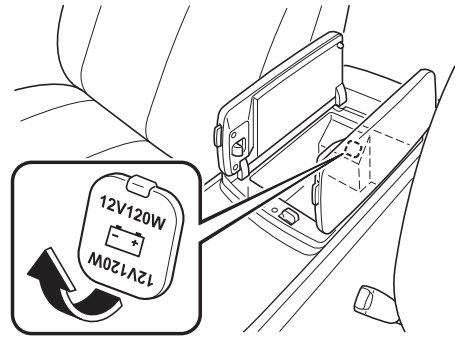

Rear

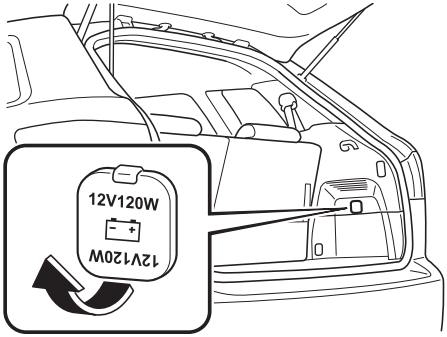

CAUTION

- *To prevent accessory socket damage or electrical failure, pay attention to the following:*
  - *Do not use accessories that require more than 120 W (DC 12 V, 10 A).*
  - *Do not use accessories that are not genuine Mazda accessories or the equivalent.*
  - *Close the cover when the accessory socket is not in use to prevent foreign objects and liquids from getting into the accessory socket.*
  - *Correctly insert the plug into the accessory socket.*
- *Noise may occur on the audio playback depending on the device connected to the accessory socket.*
- *Depending on the device connected to the accessory socket, the vehicle's electrical system may be affected, which could cause the warning light to illuminate. Disconnect the connected device and make sure that the problem is resolved. If the problem is resolved, disconnect the device from the socket and switch the ignition off. If the problem is not resolved, consult an Authorized Mazda Dealer.*

NOTE

To prevent discharging of the battery, do not use the socket for long periods with the engine off or idling.

Power Outlet*

The power outlet is positioned as shown in the figure.

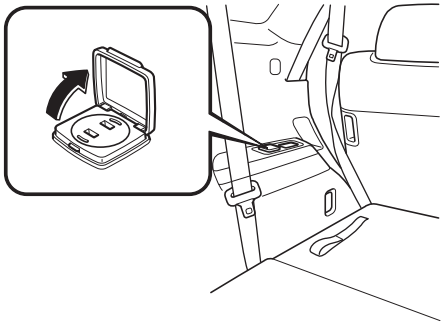

For more details, refer to
“Auxiliary terminals and power outlet” (page 6-102).

7 In Case of an Emergency

Helpful information on what to do in an emergency.

Parking in an Emergency 7-2
Parking in an Emergency 7-2

Flat Tire 7-3
Spare Tire and Tool Storage 7-3
Changing a Flat Tire 7-8

Overheating 7-16
Overheating 7-16

Emergency Starting 7-18
Jump-Starting 7-18
Push-Starting 7-20

Emergency Towing 7-21
Towing Description 7-21
Tiedown Hooks 7-22
Recreational Towing 7-24

Parking in an Emergency

The hazard warning lights should always be used when you stop on or near a roadway in an emergency.

The hazard warning lights warn other drivers that your vehicle is a traffic hazard and that they must take extreme caution when near it.

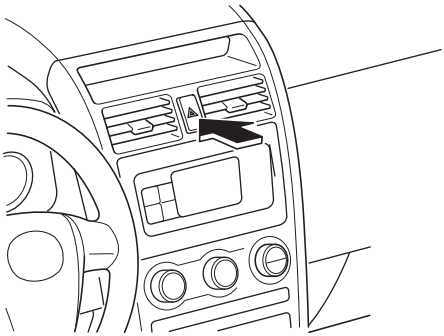

Depress the hazard warning flasher and all the turn signals will flash.

NOTE

- *The turn signals do not work when the hazard warning lights are on.*
- *Check local regulations about the use of hazard warning lights while the vehicle is being towed to verify that it is not in violation of the law.*

Spare Tire and Tool Storage

Spare tire and tools are stored in the locations illustrated in the diagram.

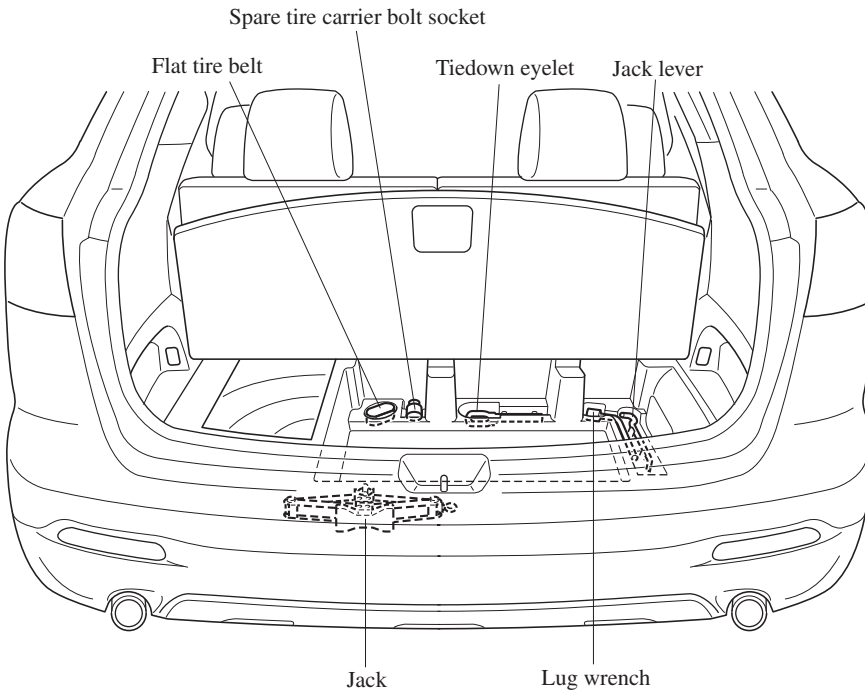

▼Jack

To remove the jack

1. Open the cargo sub-compartment.
2. Remove the cover.

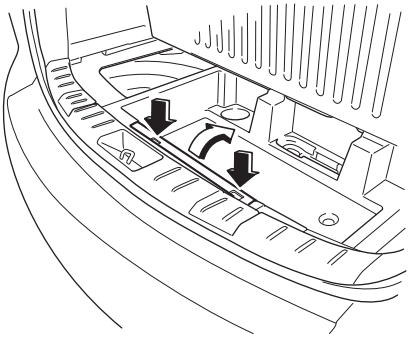

3. Turn the wing bolt and jack screw counterclockwise.

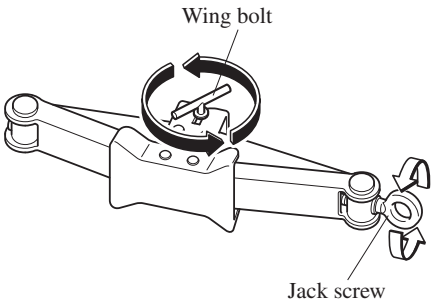

To secure the jack

1. Insert the wing bolt into the jack with the jack screw pointing right and turn the wing bolt clockwise to temporarily tighten it.
2. Turn the jack screw in the direction shown in the figure.

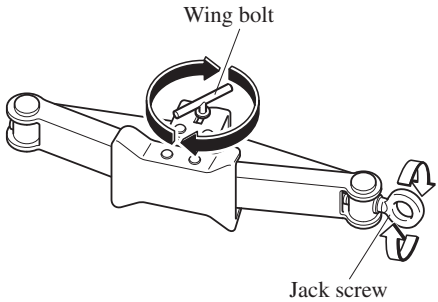

3. Turn the wing bolt completely to secure the jack.

NOTE

If the jack is not completely secured, it could rattle while driving. Make sure the jack screw is sufficiently tightened.

Maintenance

- Always keep the jack clean.
- Make sure the moving parts are kept free from dirt or rust.
- Make sure the screw thread is adequately lubricated.

▼Spare Tire

Your Mazda has a temporary spare tire. The temporary spare tire is lighter and smaller than a conventional tire, and is designed only for emergency use and should be used only for VERY short periods. Temporary spare tires should NEVER be used for long drives or extended periods.

⚠ WARNING

Do not install the temporary spare tire in place of the front wheels (driving wheels):

Driving with the temporary spare tire on one of the front driving wheels is dangerous. Especially on ice or snow. Handling will be affected. You could lose control of the vehicle and have an accident. Move a regular tire to the front wheel and install the temporary spare tire to the rear.

⚠ CAUTION

- *When using the temporary spare tire, driving stability may decrease compared to when using only the conventional tire. Drive carefully.*
- *To avoid damage to the temporary spare tire or to the vehicle, observe the following precautions:*
  - *Do not exceed 80 km/h (50 mph).*
  - *Avoid driving over obstacles. Also, do not drive through an automatic car wash. This tire's diameter is smaller than a conventional tire, so the ground clearance is reduced about 25 mm (1 in).*
  - *Do not use a tire chain on this tire because it will not fit properly.*
  - *Do not use your temporary spare tire on any other vehicle; it has been designed only for your Mazda.*
  - *Use only one temporary spare tire on your vehicle at the same time.*

NOTE

(With Tire Pressure Monitoring System)

A tire pressure sensor is not installed to the temporary spare tire. The warning light will flash continuously while the temporary spare tire is being used (page 5-30).

To remove the spare tire

1. Have everyone get out of the vehicle and away from the vehicle and traffic.
2. Open the cargo sub-compartment. Refer to Cargo Sub-Compartment on page 6-173.

3. Remove the cover.

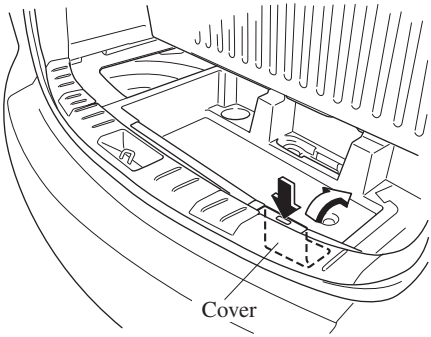

4. Attach the socket to the spare tire carrier bolt, the jack lever to the socket, and the lug wrench to the opposite end of the jack lever.

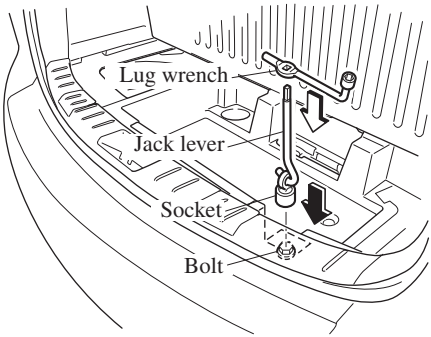

5. Slowly turn the lug wrench counterclockwise until the spare tire reaches the ground and the cable becomes loose.

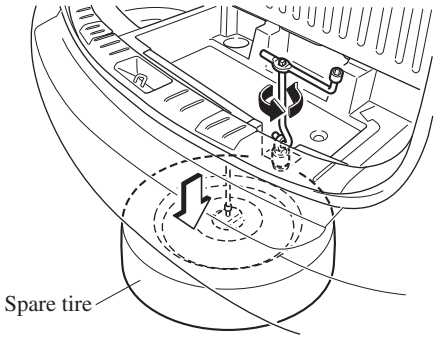

⚠ CAUTION

Do not loosen the cable too much as this may cause damage to the spare tire carrier.

6. Rotate the small lever on top of the retaining plate and pull the retaining plate out from the center hole of the tire.

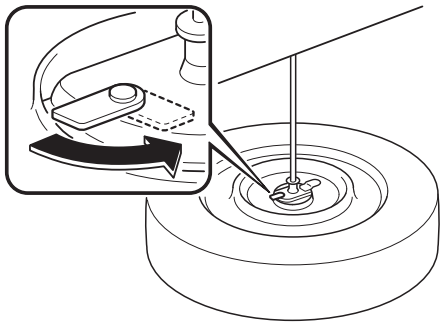

NOTE
A flat tire which has been removed from the vehicle for repair cannot be carried in the spare tire carrier. Secure the flat tire with the flat tire belt in the cargo sub-compartment (page 7-12).

7. If the temporary spare tire is not reinstalled in the spare tire carrier, tighten the spare tire carrier bolt completely to wind up the spare tire carrier cable.

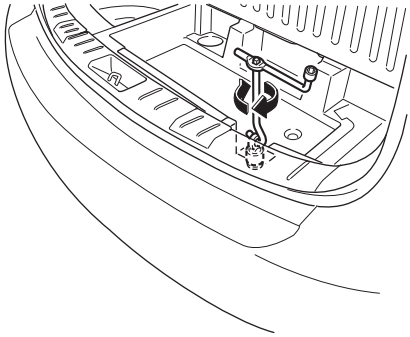

WARNING

Always tighten the spare tire carrier bolt completely tight and make sure the spare tire is locked in the highest position:

A loose spare tire carrier bolt is dangerous. The cable could be cut causing the spare tire to fall off. This could result in someone being seriously injured or even killed. Use a lug wrench to tighten the carrier bolt and make sure to tighten it until a click sound is heard.

To secure the spare tire

1. Place the tire with the outer side facing upward, rotate the small lever on top of the retaining plate and slide the retaining plate through the center hole of the tire.
   Rotate the small lever into place.

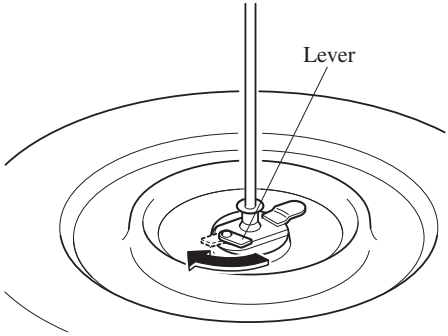

NOTE
Secure the spare tire as shown below.

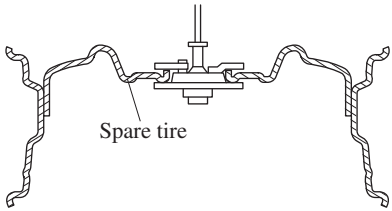

2. Raise the spare tire slowly in reverse order of removal.

WARNING

Place the specialized temporary spare tire in the spare tire carrier correctly:

Placing the specialized temporary spare tire in the spare tire carrier wrong side up or using any tire other than the small temporary spare tire designed for use with this vehicle is dangerous. It will result in poor attachment and insufficient ground clearance in the spare tire carrier and the danger of the tire falling off. This could result in someone being badly injured or even killed.

Always tighten the spare tire carrier bolt completely tight and make sure the spare tire is locked in the highest position:

A loose spare tire carrier bolt is dangerous. The cable could be cut causing the spare tire to fall off. This could result in someone being seriously injured or even killed. Use a lug wrench to tighten the carrier bolt and make sure to tighten it until a click sound is heard.

CAUTION

If you hear rattling from the spare tire carrier while the vehicle is moving, the spare tire carrier cable may be cut.
Have it repaired at an Authorized Mazda Dealer as soon as possible.

Changing a Flat Tire

NOTE

If the following occurs while driving, it could indicate a flat tire.

- *Steering becomes difficult.*
- *The vehicle begins to vibrate excessively.*
- *The vehicle pulls in one direction.*

If you have a flat tire, drive slowly to a level spot that is well off the road and out of the way of traffic to change the tire. Stopping in traffic or on the shoulder of a busy road is dangerous.

WARNING

Be sure to follow the directions for changing a tire:

Changing a tire is dangerous if not done properly. The vehicle can slip off the jack and seriously injure someone. No person should place any portion of their body under a vehicle that is supported by a jack.

Never allow anyone inside a vehicle supported by a jack:

Allowing someone to remain in a vehicle supported by a jack is dangerous. The occupant could cause the vehicle to fall resulting in serious injury.

CAUTION

(With Tire Pressure Monitoring System)

The wheels equipped on your Mazda are specially designed for installation of the tire pressure sensors. Do not use non-genuine wheels, otherwise it may not be possible to install the tire pressure sensors.

NOTE

- *Make sure the jack is well lubricated before using it.*

(With Tire Pressure Monitoring System)

- *Be sure to register the tire pressure sensor ID signal code whenever tires or wheels are changed (page 5-32).*

1. Park on a level surface off the right-of-way and firmly set the parking brake.
2. Shift into Park (P) and turn off the engine.
3. Turn on the hazard warning flasher.
4. Have everyone get out of the vehicle and away from the vehicle and traffic.
5. Remove the jack, tool, and spare tire (page 7-3).
6. Block the wheel diagonally opposite the flat tire. When blocking a wheel, place a tire block both in front and behind the tire.

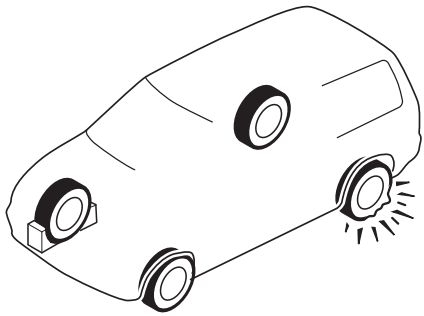

NOTE

When blocking a tire, use rocks or wood blocks of sufficient size if possible to hold the tire in place.

▼Removing a Flat Tire

1. Loosen the lug nuts by turning them counterclockwise one turn each, but do not remove any lug nuts until the tire has been raised off the ground.

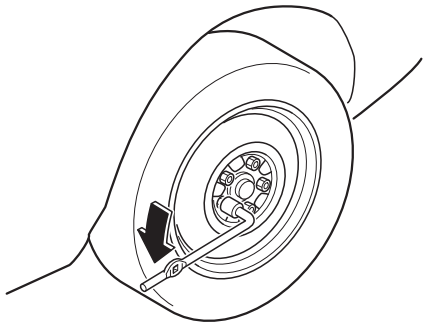

2. Place the jack on the ground.
3. Turn the jack screw in the direction shown in the figure and adjust the jack head so that it is close to the jack-up position.

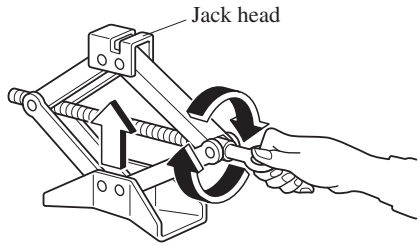

4. Place the jack under the jack-up position closest to the tire being changed with the jack head squarely under the jack-up point.

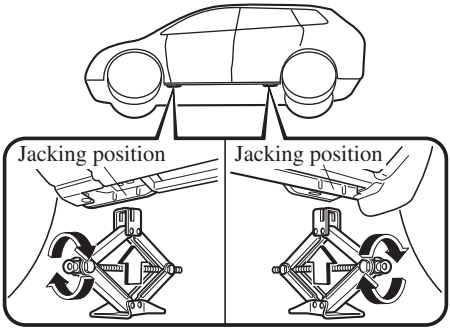

5. Continue raising the jack head gradually by rotating the screw with your hand until the jack head is inserted into the jack-up position.

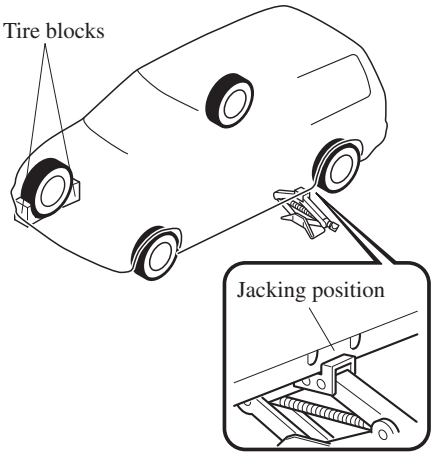

WARNING

Use only the front and rear jacking positions recommended in this manual:

Attempting to jack the vehicle in positions other than those recommended in this manual is dangerous. The vehicle could slip off the jack and seriously injure or even kill someone. Use only the front and rear jacking positions recommended in this manual.

Do not jack up the vehicle in a position other than the designated jack-up position or place any objects on or under the jack:

Jacking up the vehicle in a position other than the designated jack-up position or placing objects on or under the jack is dangerous as it could deform the vehicle body or the vehicle could fall off the jack resulting in an accident.

Use only the jack provided with your Mazda:

Using a jack that is not designed for your Mazda is dangerous. The vehicle could slip off the jack and seriously injure someone.

Never place objects under the jack:

Jacking the vehicle with an object under the jack is dangerous. The jack could slip and someone could be seriously injured by the jack or the falling vehicle.

6. Insert the jack lever and attach the lug wrench to tire jack.

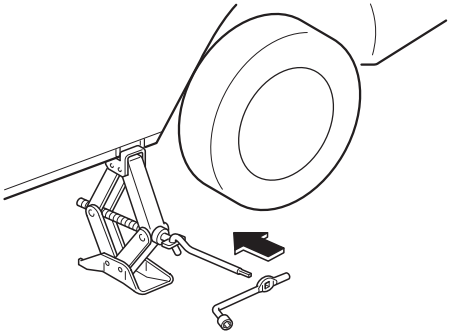

7. Turn the lug wrench clockwise and raise the vehicle high enough so that the spare tire can be installed. Before removing the lug nuts, make sure your Mazda is firmly in position and that it cannot slip or move.

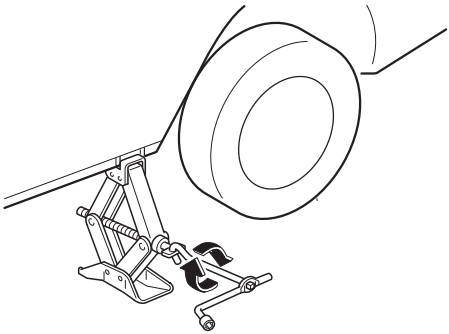

WARNING

Do not jack up the vehicle higher than is necessary:

Jacking up the vehicle higher than is necessary is dangerous as it could destabilize the vehicle resulting in an accident.

Do not start the engine or shake the vehicle while it is jacked up:

Starting the engine or shaking the vehicle while it is jacked up is dangerous as it could cause the vehicle to fall off the jack resulting in an accident.

Never go under the vehicle while it is jacked up:

Going under the vehicle while it is jacked up is dangerous as it could result in death or serious injury if the vehicle were to fall off the jack.

8. Remove the lug nuts by turning them counterclockwise; then remove the wheel and center cap.

▼Locking Lug Nuts*

If your vehicle has optional antitheft wheel lug nuts, one on each wheel will lock the tires and you must use a special key to unlock them. This key is attached to the lug wrench and is stored with the spare tire. Register them with the lock manufacturer by filling out the card provided in the glove compartment and mailing it in the accompanying envelope. If you lose this key, consult an Authorized Mazda Dealer or use the lock manufacturer's order form, which is with the registration card.

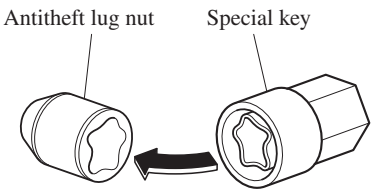

To remove an antitheft lug nut

1. Obtain the key for the antitheft lug nut.
2. Place the key on top of the nut, and be sure to hold the key square to it. If you hold the key at an angle, you may damage both key and nut. Do not use a power impact wrench.
3. Place the lug wrench on top of the key and apply pressure. Turn the wrench counterclockwise.

To install the nut

1. Place the key on top of the nut, and be sure to hold the key square to it. If you hold the key at an angle, you may damage both key and nut. Do not use a power impact wrench.
2. Place the lug wrench on top of the key, apply pressure, and turn it clockwise.

▼Mounting the Spare Tire

1. Remove dirt and grime from the mounting surfaces of the wheel and hub, including the hub bolts, with a cloth.

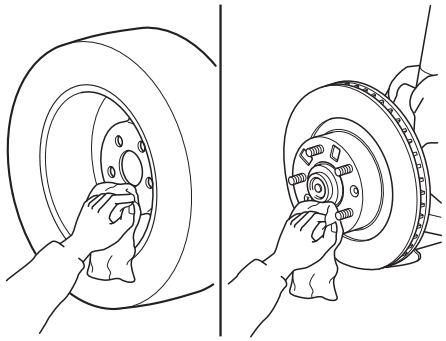

⚠ WARNING

Make sure the mounting surfaces of the wheel, hub and lug nuts are clean before changing or replacing tires:

When changing or replacing a tire, not removing dirt and grime from the mounting surfaces of the wheel, hub and hub bolts is dangerous. The lug nuts could loosen while driving and cause the tire to come off, resulting in an accident.

2. Mount the spare tire.

*Some models.

3. Install the lug nuts with the beveled edge inward; tighten them by hand.

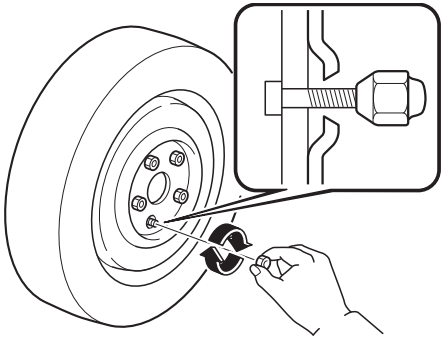

WARNING

Do not apply oil or grease to lug nuts and bolts and do not tighten the lug nuts beyond the recommended tightening torque:

Applying oil or grease to lug nuts and bolts is dangerous. The lug nuts could loosen while driving and cause the tire to come off, resulting in an accident. In addition, lug nuts and bolts could be damaged if tightened more than necessary.

4. Turn the lug wrench counterclockwise and lower the vehicle. Use the lug wrench to tighten the nuts in the order shown.

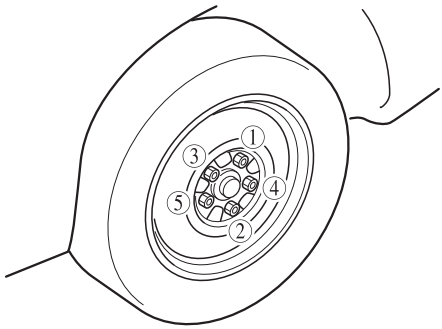

If you are unsure of how tight the nuts should be, have them inspected at an Authorized Mazda Dealer.

Nut tightening torque	
N·m (kgf·m, ft·lbf)	108—147 (12—14, 80—108)

WARNING

Always securely and correctly tighten the lug nuts:

Improperly or loosely tightened lug nuts are dangerous. The wheel could wobble or come off. This could result in loss of vehicle control and cause a serious accident.

Be sure to reinstall the same nuts you removed or replace them with metric nuts of the same configuration:

Because the wheel studs and lug nuts on your Mazda have metric threads, using a non-metric nut is dangerous. On a metric stud, it would not secure the wheel and would damage the stud, which could cause the wheel to slip off and cause an accident.

5. Open the cargo sub-compartment. Refer to Cargo Sub-Compartment on page 6-173.

6. Remove the cover.

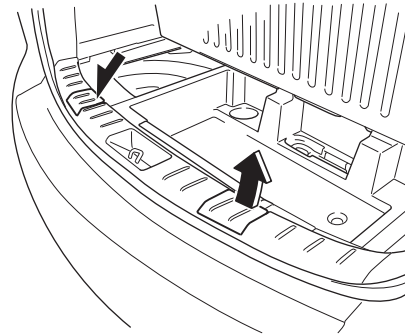

7. Remove the belt for securing the flat tire.
8. Return the third-row seatback to its original position.
   Refer to Split-Folding the Third-Row Seat on page 2-14.
9. Remove the tire blocks and store the tools and jack.
10. Place the flat tire in the cargo sub-compartment.

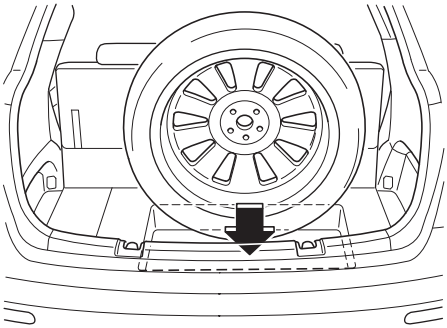

11. Thread the belt through the wheel as shown in the figure, then attach the belt clips to the attachment loop.

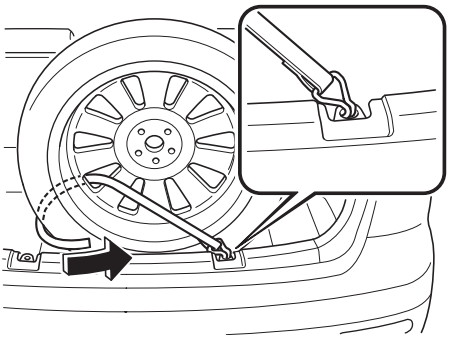

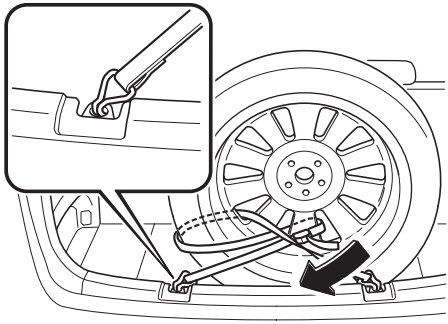

NOTE
*Attach location *1 of the belt to the attachment loop on the right.*

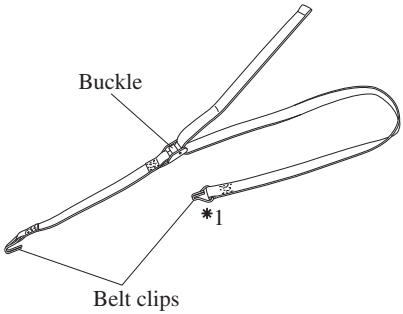

12. Pull the belt end to secure the flat tire.

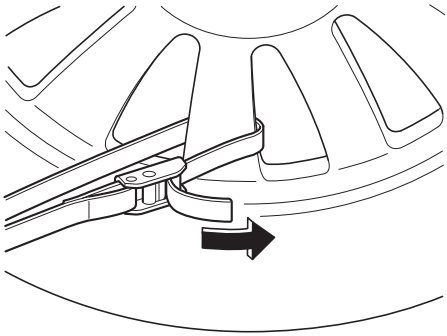

13. Check the tire inflation pressure.
    Refer to Tires on page 10-6.

14. Have the flat tire repaired or replaced as soon as possible.

WARNING

Do not drive with any tires that have incorrect air pressure:

Driving on tires with incorrect air pressure is dangerous. Tires with incorrect pressure could affect handling and result in an accident. When you check the regular tires' air pressure, check the spare tire, too.

NOTE

(With Tire Pressure Monitoring System)

A tire pressure sensor is not installed to the temporary spare tire. The warning light will flash continuously while the temporary spare tire is being used (page 5-30).

NOTE

To prevent the jack and tool from rattling, store them properly.

Overheating

If the temperature gauge indicates overheating, the vehicle loses power, or you hear a loud knocking or pinging noise, the engine is probably too hot.

WARNING

Switch the ignition to off and make sure the fan is not running before attempting to work near the cooling fan:

Working near the cooling fan when it is running is dangerous. The fan could continue running indefinitely even if the engine has stopped and the engine compartment temperature is high. You could be hit by the fan and seriously injured.

Do not remove either cooling system caps when the engine and radiator are hot:

When the engine and radiator are hot, scalding coolant and steam may shoot out under pressure and cause serious injury.

Open the hood ONLY after steam is no longer escaping from the engine:

Steam from an overheated engine is dangerous. The escaping steam could seriously burn you.

If the temperature gauge indicates overheating:

1. Drive safely to the side of the road and park off the right-of-way.
2. Shift into park (P).
3. Apply the parking brake.
4. Turn off the air conditioner.
5. Check whether coolant or steam is escaping from under the hood or from the engine compartment.

   If steam is coming from the engine compartment:
   Do not go near the front of the vehicle.
   Stop the engine.
   Wait until the steam dissipates, then open the hood and start the engine.

   If neither coolant nor steam is escaping:
   Open the hood and idle the engine until it cools.

CAUTION

If the cooling fan does not operate while the engine is running, the engine temperature will increase. Stop the engine and call an Authorized Mazda Dealer.

6. Make sure the cooling fan is operating, then turn off the engine after the temperature has decreased.
7. When cool, check the coolant reservoir level.
   If it's low, look for coolant leaks from the radiator and hoses.

If you find a leak or other damage, or if coolant is still leaking:
Stop the engine and call an Authorized Mazda Dealer.

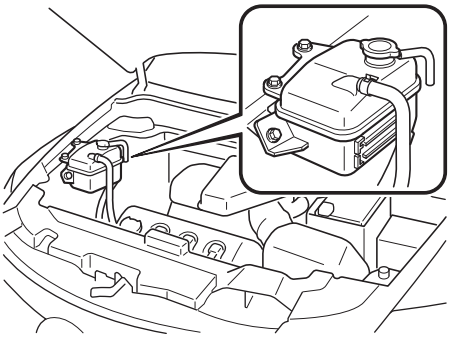

If you find no problems, the engine is cool, and no leaks are obvious:
Carefully add coolant as required (page 8-23).

CAUTION

If the engine continues to overheat or frequently overheats, have the cooling system inspected. The engine could be seriously damaged unless repairs are made. Consult an Authorized Mazda Dealer.

Jump-Starting

Jump-starting is dangerous if done incorrectly. So follow the procedure carefully. If you feel unsure about jump-starting, we strongly recommend that you have a competent service technician do the work.

⚠ WARNING

Follow These Precautions Carefully:
To ensure safe and correct handling of the battery, read the following precautions carefully before using the battery or inspecting it.

Always wear eye protection when working near the battery:
Working without eye protection is dangerous. Battery fluid contains SULFURIC ACID which could cause blindness if splashed into your eyes. Also, hydrogen gas produced during normal battery operation, could ignite and cause the battery to explode.

Wear eye protection and protective gloves to prevent contact with battery fluid:
Spilled battery fluid is dangerous.
Battery fluid contains SULFURIC ACID which could cause serious injuries if it gets in eyes, skin or clothing. If this happens, immediately flush your eyes with water for 15 minutes or wash your skin thoroughly and get medical attention.

Always keep batteries out of the reach of children:
Allowing children to play near batteries is dangerous. Battery fluid could cause serious injuries if it gets in the eyes or on the skin.

Do not allow the positive (+) terminal to contact any other metal object that could cause sparks:
Flames and sparks near open battery cells are dangerous. Hydrogen gas, produced during normal battery operation, could ignite and cause the battery to explode. An exploding battery can cause serious burns and injuries. When working near a battery, do not allow metal tools to contact the positive (+) or negative (–) terminal of the battery.

Keep all flames, including cigarettes, and sparks away from open battery cells:
Flames and sparks near open battery cells are dangerous. Hydrogen gas, produced during normal battery operation, could ignite and cause the battery to explode. An exploding battery can cause serious burns and injuries.

Do not jump-start a frozen battery or one with a low fluid level:
Jump-starting a frozen battery or one with a low fluid level is dangerous. It may rupture or explode, causing serious injury.

Connect the negative cable to a good ground point away from the battery:
Connecting the end of the second jumper cable to the negative (–) terminal of the discharged battery is dangerous.
A spark could cause the gas around the battery to explode and injure someone.

Route the jumper cables away from parts that will be moving:
Connecting a jumper cable near or to moving parts (cooling fans, belts) is dangerous. The cable could get caught when the engine starts and cause serious injury.

CAUTION

Use only a 12 V booster system. You can damage a 12 V starter, ignition system, and other electrical parts beyond repair with a 24 V power supply (two 12 V batteries in series or a 24 V motor generator set).

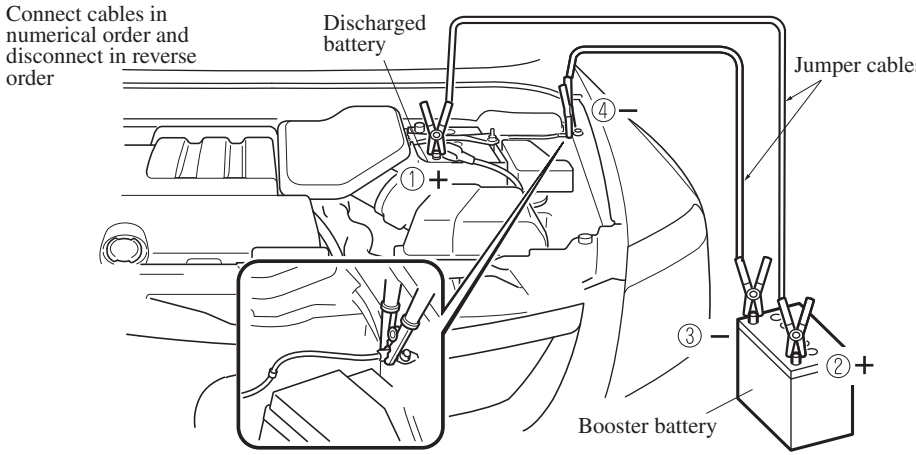

1. Make sure the booster battery is 12 V and that its negative terminal is grounded.
2. If the booster battery is in another vehicle, don't allow both vehicles to touch. Turn off the engine of the vehicle with the booster battery and all unnecessary electrical loads in both vehicles.
3. Connect the jumper cables in the exact sequence as in the illustration.
   - Connect one end of a cable to the positive terminal on the discharged battery (1).
   - Attach the other end to the positive terminal on the booster battery (2).
   - Connect one end of the other cable to the negative terminal of the booster battery (3).
   - Connect the other end to the ground point indicated in the illustration away from the discharged battery (4).
4. Start the engine of the booster vehicle and run it a few minutes. Then start the engine of the other vehicle.
5. When finished, carefully disconnect the cables in the reverse order described in the illustration.

Push-Starting

Do not push-start your Mazda.

NOTE
You can't start a vehicle with an automatic transaxle by pushing it.

Towing Description

We recommend that towing be done only by an Authorized Mazda Dealer or a commercial tow-truck service.

Proper lifting and towing are necessary to prevent damage to the vehicle.
Particularly when towing a AWD vehicle, where all the wheels are connected to the drive train, proper transporting of the vehicle is absolutely essential to avoid damaging the drive system. Government and local laws must be followed.

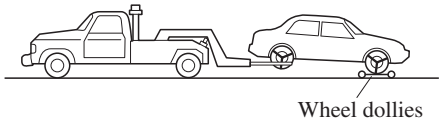

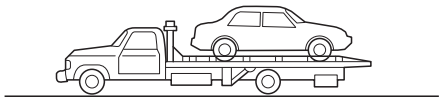

A towed 2WD vehicle should have its drive wheels (front wheels) off the ground. If excessive damage or other conditions prevent this, use wheel dollies.

When towing a 2WD vehicle with the rear wheels on the ground, release the parking brake.

A towed AWD vehicle must have all its wheels off the ground.

⚠ CAUTION

Do not tow the vehicle pointed backward with driving wheels on the ground. This may cause internal damage to the transaxle.

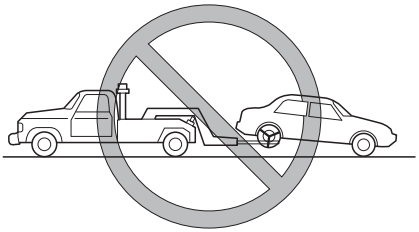

⚠ CAUTION

Do not tow with sling-type equipment. This could damage your vehicle. Use wheel-lift or flatbed equipment.

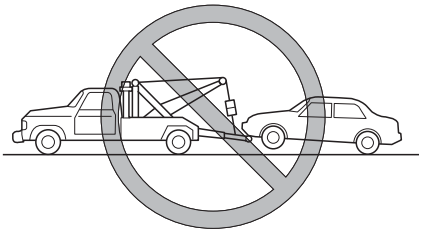

⚠ WARNING

Always tow a AWD vehicle with all four wheels off the ground:

Towing a AWD vehicle with either the front or rear wheels on the ground is dangerous as the drive train could be damaged, or the vehicle could trail away from the tow truck and cause an accident. If the drive train has been damaged, transport the vehicle on a flat bed truck.

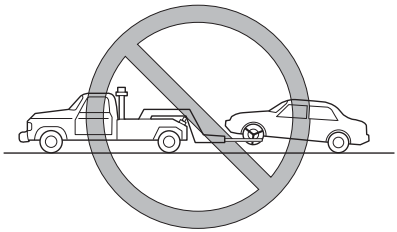

Tiedown Hooks

⚠ CAUTION

Do not use the front and rear tiedown eyelets for towing the vehicle.
They have been designed only for securing the vehicle to a transport vessel during shipping.
Using the eyelets for any other purpose could result in the vehicle being damaged.

▼Tiedown Hooks

1. Remove the tiedown eyelet and the lug wrench from the luggage compartment (page 7-3).
2. **(Front)**
   Press the marking on the cap as shown in the figure to remove the cap.
   (Rear)
   Wrap a flathead screwdriver or similar tool with a soft cloth to prevent damage to a painted bumper, and open the cap located on the bumper.

Front

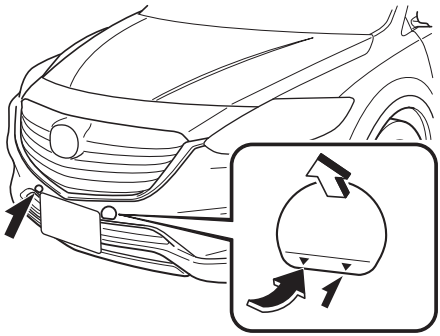

Rear

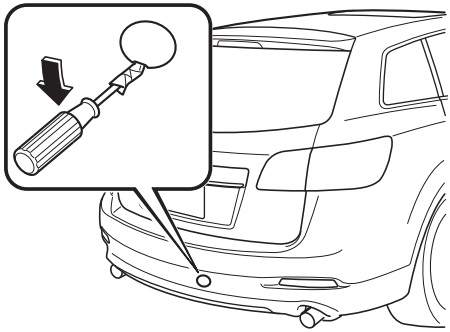

⚠ CAUTION

Do not use excessive force as it may damage the cap or scratch the painted bumper surface.

NOTE

Remove the cap completely and store it so as not to lose it.

3. Securely install the tiedown eyelet using the lug wrench.

Front

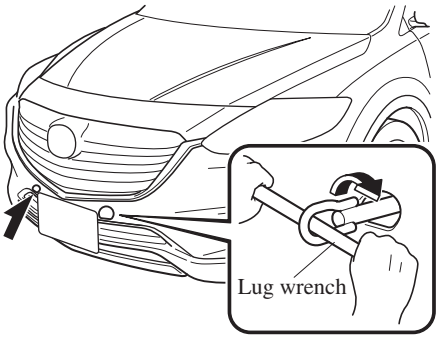

Rear

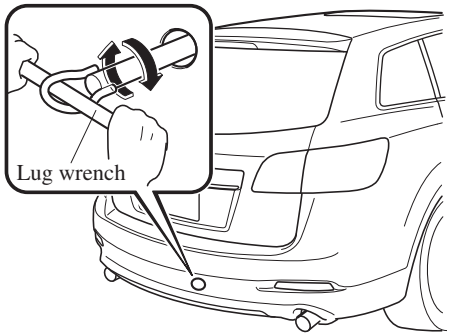

4. Hook the tying rope to the tiedown eyelet.

Front

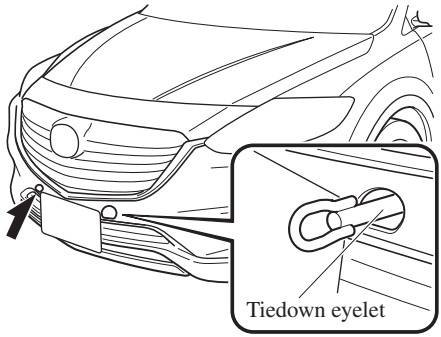

Rear

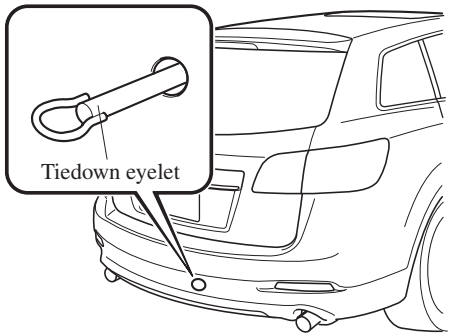

⚠ CAUTION

If the tiedown eyelet is not securely tightened, it may loosen or disengage from the bumper when tying down the vehicle. Make sure that the tiedown eyelet is securely tightened to the bumper.

Recreational Towing

An example of “recreational towing” is towing your vehicle behind a motorhome. The transaxle is not designed for towing this vehicle on all 4 wheels.
When doing recreational towing refer to “Towing Description” (page 7-21) and “Tiedown Hooks” (page 7-22) and carefully follow the instructions.

8 Maintenance and Care

How to keep your Mazda in top condition.

Introduction 8-2
Introduction 8-2

Scheduled Maintenance 8-4
Scheduled Maintenance (U.S.A., Canada, and Puerto Rico) 8-4
Scheduled Maintenance (Mexico) 8-10

Owner Maintenance 8-17
Owner Maintenance Schedule 8-17
Owner Maintenance Precautions 8-18
Engine Compartment Overview 8-20
Engine Oil 8-21
Engine Coolant 8-23
Brake Fluid 8-25
Power Steering Fluid 8-26
Washer Fluid 8-26
Body Lubrication 8-27
Wiper Blades 8-28
Battery 8-32
Tires 8-34
Light Bulbs 8-40
Fuses 8-49

Appearance Care 8-56
How to Minimize Environmental Paint Damage 8-56
Exterior Care 8-58
Interior Care 8-62

Introduction

Be extremely careful and prevent injury to yourself and others or damage to your vehicle when using this manual for inspection and maintenance.

If you are unsure about any procedure it describes, we strongly urge you to have a reliable and qualified service shop perform the work, preferably an Authorized Mazda Dealer.

Factory-trained Mazda technicians and genuine Mazda parts are best for your vehicle. Without this expertise and the parts that have been designed and made especially for your Mazda, inadequate, incomplete, and insufficient servicing may result in problems. This could lead to vehicle damage or an accident and injuries.

For expert advice and quality service, consult an Authorized Mazda Dealer.

To continue warranty eligibility and to protect your investment, it is your responsibility to properly maintain your vehicle according to factory recommended schedules outlined in this manual. As part of this you must keep your maintenance records, receipts, repair orders and any other documents as evidence this maintenance was performed. You must present these documents, should any warranty coverage disagreement occur. Failure to do so can result in your warranty being voided either in whole or in part.

This evidence may consist of the following:
- The Mazda Scheduled Maintenance Record, refer to the Warranty Booklet, must be completely filled out showing mileage, repair order number, date for each service, and signed by a qualified automotive service technician who service vehicles.
- Original copies of repair orders or other receipts that include the mileage and date the vehicle was serviced. Each receipt should be signed by a qualified automotive service technician.
- For self maintenance, a statement that you completed the maintenance yourself, displaying mileage and the date the work was performed. Also, receipts for the replacement parts (fluid, filters, etc.) indicating the date and mileage must accompany this statement.

NOTE
If you elect to perform maintenance yourself or have your vehicle serviced at a location other than an Authorized Mazda Dealer, Mazda requires that all fluids, parts and materials must meet Mazda standards for durability and performance as described in this manual.

Claims against the warranty resulting from lack of maintenance, as opposed to defective materials or authorized Mazda workmanship, will not be honored.

Any auto repair shop using parts equivalent to your Mazda's original equipment may perform maintenance. **But we recommend that it always be done by an Authorized Mazda Dealer using genuine Mazda parts.**

Scheduled Maintenance (U.S.A., Canada, and Puerto Rico)

Follow Schedule 1 if the vehicle is operated mainly where none of the following conditions apply.

- Repeated short-distance driving
- Driving in dusty conditions
- Driving with extended use of brakes
- Driving in areas where salt or other corrosive materials are used
- Driving on rough or muddy roads
- Extended periods of idling or low-speed operation
- Driving for long periods in cold temperatures or extremely humid climates
- Driving in extremely hot conditions
- Driving in mountainous conditions continually

If any do apply, follow Schedule 2 (Canada and Puerto Rico residents follow Schedule 2).

NOTE

After the prescribed period, continue to follow the described maintenance at the recommended intervals.

▼Schedule 1

Maintenance Interval		Number of months or kilometers (miles), whichever comes first							
	Months	6	12	18	24	30	36	42	48
	×1000 km	12	24	36	48	60	72	84	96
	×1000 miles	7.5	15	22.5	30	37.5	45	52.5	60
ENGINE									
Drive belts		Inspect every 168,000 km (105,000 miles)							
		Replace every 240,000 km (150,000 miles)							
Engine oil		R	R	R	R	R	R	R	R
Engine oil filter		R	R	R	R	R	R	R	R
COOLING SYSTEM									
Engine coolant	FL22 type*1	Replace at first 192,000 km (120,000 miles) or 10 years; after that, every 96,000 km (60,000 miles) or 5 years							
	Others	Replace at first 96,000 km (60,000 miles) or 4 years; after that, every 2 years							
FUEL SYSTEM									
Air filter				C		R			C
Fuel lines and hoses*2					I				I
Hoses and tubes for emission*2									I
IGNITION SYSTEM									
Spark plugs		Replace every 160,000 km (100,000 miles)							
CHASSIS and BODY									
Brake lines, hoses and connections					I				I
Disc brakes			I		I		I		I
Tire (Rotation)		Rotate every 12,000 km (7,500 miles)							
Steering operation and linkages					I				I
Front and rear suspension, ball joints and wheel bearing axial play					I				I
Rear differential oil (AWD)		*3*4							
Driveshaft dust boots					I				I
Bolts and nuts on chassis and body					T				T
Exhaust system and heat shields		Inspect every 72,000 km (45,000 miles) or 5 years							
All locks and hinges		L	L	L	L	L	L	L	L

Scheduled Maintenance

Maintenance Interval	Number of months or kilometers (miles), whichever comes first								
	Months	**6**	**12**	**18**	**24**	**30**	**36**	**42**	**48**
	×1000 km	**12**	**24**	**36**	**48**	**60**	**72**	**84**	**96**
	×1000 miles	**7.5**	**15**	**22.5**	**30**	**37.5**	**45**	**52.5**	**60**
AIR CONDITIONER SYSTEM									
Cabin air filter					R				R

Chart symbols:

I: Inspect: Inspect and clean, repair, adjust, fill up, or replace if necessary.
R: Replace
C: Clean
L: Lubricate
T: Tighten

Remarks:

*1 Use FL22 type coolant in vehicles with the inscription “FL22” on the radiator cap itself or the surrounding area. Use FL22 when replacing the coolant.
*2 According to state/provincial and federal regulations, failure to perform maintenance on these items will not void your emissions warranties. However, Mazda recommends that all maintenance services be performed at the recommended time or mileage/kilometer period to ensure long-term reliability.
*3 If the vehicle is operated primarily under any of the following conditions, replace the rear differential oil at every 48,000 km (30,000 miles).
a) Towing a trailer or using a car-top carrier
b) Driving in dusty, sandy or wet conditions
c) Extended periods of idling or low speed operation
d) Repeated short trips of less than 16 km (10 miles)
*4 If this component has been submerged in water, the oil should be replaced.

▼Schedule 2

Maintenance Interval		Number of months or kilometers (miles), whichever comes first											
	Months	4	8	12	16	20	24	28	32	36	40	44	48
	×1000 km	8	16	24	32	40	48	56	64	72	80	88	96
	×1000 miles	5	10	15	20	25	30	35	40	45	50	55	60
ENGINE													
Drive belts		Inspect every 160,000 km (100,000 miles)											
		Replace every 240,000 km (150,000 miles)											
Engine oil	Puerto Rico	Replace every 5,000 km (3,000 miles) or 3 months											
	Others	R	R	R	R	R	R	R	R	R	R	R	R
Engine oil filter		R	R	R	R	R	R	R	R	R	R	R	R
COOLING SYSTEM													
Engine coolant	FL22 type*1	Replace at first 192,000 km (120,000 miles) or 10 years; after that, every 96,000 km (60,000 miles) or 5 years											
	Others	Replace at first 96,000 km (60,000 miles) or 4 years; after that, every 2 years											
Engine coolant level		I	I	I	I	I	I	I	I	I	I	I	I
FUEL SYSTEM													
Air filter	Puerto Rico			C			R			C			R
	Others				C			R				C	
Fuel lines and hoses*2							I						I
Hoses and tubes for emission*2													I
IGNITION SYSTEM													
Spark plugs	USA	Replace every 96,000 km (60,000 miles)											
	Others*3	Replace every 160,000 km (100,000 miles)											
ELECTRICAL SYSTEM													
Function of all lights		I	I	I	I	I	I	I	I	I	I	I	I

Scheduled Maintenance

Maintenance Interval	Number of months or kilometers (miles), whichever comes first											
	Months	**4**	**8**	**12**	**16**	**20**	**24**	**28**	**32**	**36**	**40**	**44**	**48**
	×1000 km	**8**	**16**	**24**	**32**	**40**	**48**	**56**	**64**	**72**	**80**	**88**	**96**
	×1000 miles	**5**	**10**	**15**	**20**	**25**	**30**	**35**	**40**	**45**	**50**	**55**	**60**
CHASSIS and BODY													
Brake lines, hoses and connections							I						I
Brake fluid level		I	I	I	I	I	I	I	I	I	I	I	I
Disc brakes				I			I			I			I
Tire (Rotation)		Rotate every 8,000 km (5,000 miles)											
Tire inflation pressure and tire wear		I	I	I	I	I	I	I	I	I	I	I	I
Steering operation and linkages							I						I
Power steering fluid level		I	I	I	I	I	I	I	I	I	I	I	I
Front and rear suspension, ball joints and wheel bearing axial play							I						I
Rear differential oil (AWD)		*4*5											
Driveshaft dust boots							I						I
Bolts and nuts on chassis and body							T						T
Body condition*6 (for rust, corrosion and perforation)				I			I			I			I
Exhaust system and heat shields		Inspect every 72,000 km (45,000 miles) or 5 years											
All locks and hinges		L	L	L	L	L	L	L	L	L	L	L	L
Washer fluid level		I	I	I	I	I	I	I	I	I	I	I	I

Maintenance Interval	Number of months or kilometers (miles), whichever comes first												
	Months	**4**	**8**	**12**	**16**	**20**	**24**	**28**	**32**	**36**	**40**	**44**	**48**
	×1000 km	**8**	**16**	**24**	**32**	**40**	**48**	**56**	**64**	**72**	**80**	**88**	**96**
	×1000 miles	**5**	**10**	**15**	**20**	**25**	**30**	**35**	**40**	**45**	**50**	**55**	**60**
AIR CONDITIONER SYSTEM													
Cabin air filter		Replace every 40,000 km (25,000 miles) or 2 years											

Chart symbols:

I: Inspect: Inspect and clean, repair, adjust, fill up, or replace if necessary.
R: Replace
C: Clean
L: Lubricate
T: Tighten

Remarks:

*1 Use FL22 type coolant in vehicles with the inscription “FL22” on the radiator cap itself or the surrounding area. Use FL22 when replacing the coolant.
*2 According to state/provincial and federal regulations, failure to perform maintenance on these items will not void your emissions warranties. However, Mazda recommends that all maintenance services be performed at the recommended time or mileage/kilometer period to ensure long-term reliability.
*3 If the vehicle is operated primarily under any of the following conditions, replace the spark plugs at every 96,000 km (60,000 miles) or shorter.
a) Repeated short-distance driving
b) Extended periods of idling or low-speed operation
c) Driving for long periods in cold temperatures or extremely humid climates
*4 If the vehicle is operated primarily under any of the following conditions, replace the rear differential oil at every 48,000 km (30,000 miles).
a) Towing a trailer or using a car-top carrier
b) Driving in dusty, sandy or wet conditions
c) Extended periods of idling or low speed operation
d) Repeated short trips of less than 16 km (10 miles)
*5 If this component has been submerged in water, the oil should be replaced.
*6 Canada only

Scheduled Maintenance (Mexico)

Follow Schedule 1 if the vehicle is operated mainly where none of the following conditions apply.

- Repeated short-distance driving
- Driving in dusty conditions
- Driving with extended use of brakes
- Driving in areas where salt or other corrosive materials are used
- Driving on rough or muddy roads
- Extended periods of idling or low-speed operation
- Driving for long periods in cold temperatures or extremely humid climates
- Driving in extremely hot conditions
- Driving in mountainous conditions continually

If any do apply, follow Schedule 2.

NOTE

After the prescribed period, continue to follow the described maintenance at the recommended intervals.

▼Schedule 1

Maintenance Interval		Number of months or kilometers, whichever comes first											
	Months	6	12	18	24	30	36	42	48	54	60	66	72
	×1000 km	10	20	30	40	50	60	70	80	90	100	110	120
ENGINE													
Drive belts		Inspect every 40,000 km or 2 years											
		Replace every 240,000 km											
Engine oil		R	R	R	R	R	R	R	R	R	R	R	R
Engine oil filter		R	R	R	R	R	R	R	R	R	R	R	R
COOLING SYSTEM													
Cooling system					I				I				I
Engine coolant	FL22 type*1	Replace at first 190,000 km or 10 years; after that, every 60,000 km or 3 years											
	Others				R				R				R
FUEL SYSTEM													
Air filter			R		R		R		R		R		R
Fuel lines and hoses					I*2				I*2				I
Hoses and tubes for emission					I*2				I*2				I
Fuel filter					R				R				R
IGNITION SYSTEM													
Spark plugs		Replace every 60,000 km											
CHASSIS and BODY													
Brake lines, hoses and connections			I		I		I		I		I		I
Brake fluid level		I	I	I		I	I	I		I	I	I	
Brake fluid					R				R				R
Disc brakes		I	I	I	I	I	I	I	I	I	I	I	I
Tire (Rotation)		Rotate every 10,000 km											
Tire inflation pressure and tire wear		I	I	I	I	I	I	I	I	I	I	I	I
Steering operation and linkages		I	I	I	I	I	I	I	I	I	I	I	I
Power steering fluid level		I	I	I	I	I	I	I	I	I	I	I	I
Front and rear suspension, ball joints and wheel bearing axial play			I		I		I		I		I		I
Rear differential oil (AWD)		*3*4											
Driveshaft dust boots			I		I		I		I		I		I
Bolts and nuts on chassis and body			T		T		T		T		T		T
Exhaust system and heat shields			I		I		I		I		I		I
All locks and hinges		L	L	L	L	L	L	L	L	L	L	L	L
Washer fluid level		I	I	I	I	I	I	I	I	I	I	I	I

Scheduled Maintenance

Maintenance Interval	Number of months or kilometers, whichever comes first												
	Months	6	12	18	24	30	36	42	48	54	60	66	72
	×1000 km	10	20	30	40	50	60	70	80	90	100	110	120
AIR CONDITIONER SYSTEM													
Cabin air filter					R				R				R

Chart symbols:

I: Inspect: Inspect and clean, repair, adjust, fill up, or replace if necessary.
R: Replace
T: Tighten
L: Lubricate

Remarks:

*1 Use FL22 type coolant in vehicles with the inscription “FL22” on the radiator cap itself or the surrounding area. Use FL22 when replacing the coolant.
*2 According to state/provincial and federal regulations, failure to perform maintenance on these items will not void your emissions warranties. However, Mazda recommends that all maintenance services be performed at the recommended time or kilometer period to ensure long-term reliability.
*3 If the vehicle is operated primarily under any of the following conditions, replace the rear differential oil at every 40,000 km.
a) Towing a trailer or using a car-top carrier
b) Driving in dusty, sandy or wet conditions
c) Extended periods of idling or low speed operation
d) Repeated short trips of less than 16 km
*4 If this component has been submerged in water, the oil should be replaced.

▼Schedule 2

Maintenance Interval		Number of months or kilometers, whichever comes first											
	Months	3	6	9	12	15	18	21	24	27	30	33	36
	×1000 km	5	10	15	20	25	30	35	40	45	50	55	60
ENGINE													
Drive belts		Inspect every 40,000 km or 2 years											
		Replace every 240,000 km											
Engine oil		R	R	R	R	R	R	R	R	R	R	R	R
Engine oil filter		R	R	R	R	R	R	R	R	R	R	R	R
COOLING SYSTEM													
Cooling system									I				
Engine coolant	FL22 type*1	Replace at first 190,000 km or 10 years; after that, every 60,000 km or 3 years											
	Others								R				
Engine coolant level		I	I	I	I	I	I	I	I	I	I	I	I
FUEL SYSTEM													
Air filter			C		R		C		R		C		R
Fuel lines and hoses									I*2				
Hoses and tubes for emission									I*2				
Fuel filter									R				
IGNITION SYSTEM													
Spark plugs		Replace every 60,000 km											
ELECTRICAL SYSTEM													
Function of all lights		I	I	I	I	I	I	I	I	I	I	I	I
CHASSIS and BODY													
Brake lines, hoses and connections					I				I				I
Brake fluid level			I		I		I				I		I
Brake fluid									R				
Disc brakes			I		I		I		I		I		I
Tire (Rotation)		Rotate every 10,000 km											
Tire inflation pressure and tire wear			I		I		I		I		I		I
Steering operation and linkages			I		I		I		I		I		I
Power steering fluid level			I		I		I		I		I		I
Front and rear suspension, ball joints and wheel bearing axial play					I				I				I
Rear differential oil (AWD)		*3*4											
Driveshaft dust boots					I				I				I
Bolts and nuts on chassis and body					T				T				T
Exhaust system and heat shields					I				I				I
All locks and hinges			L		L		L		L		L		L
Washer fluid level			I		I		I		I		I		I

Scheduled Maintenance

Maintenance Interval	Number of months or kilometers, whichever comes first												
	Months	3	6	9	12	15	18	21	24	27	30	33	36
	×1000 km	5	10	15	20	25	30	35	40	45	50	55	60
AIR CONDITIONER SYSTEM													
Cabin air filter					R				R				R

Chart symbols:

I: Inspect: Inspect and clean, repair, adjust, fill up, or replace if necessary.
R: Replace
C: Clean
T: Tighten
L: Lubricate

Remarks:

*1 Use FL22 type coolant in vehicles with the inscription “FL22” on the radiator cap itself or the surrounding area. Use FL22 when replacing the coolant.
*2 According to state/provincial and federal regulations, failure to perform maintenance on these items will not void your emissions warranties. However, Mazda recommends that all maintenance services be performed at the recommended time or kilometer period to ensure long-term reliability.
*3 If the vehicle is operated primarily under any of the following conditions, replace the rear differential oil at every 40,000 km.
a) Towing a trailer or using a car-top carrier
b) Driving in dusty, sandy or wet conditions
c) Extended periods of idling or low speed operation
d) Repeated short trips of less than 16 km
*4 If this component has been submerged in water, the oil should be replaced.

(Cont.)

Maintenance Interval		Number of months or kilometers, whichever comes first											
	Months	39	42	45	48	51	54	57	60	63	66	69	72
	×1000 km	65	70	75	80	85	90	95	100	105	110	115	120
ENGINE													
Drive belts		Inspect every 40,000 km or 2 years											
		Replace every 240,000 km											
Engine oil		R	R	R	R	R	R	R	R	R	R	R	R
Engine oil filter		R	R	R	R	R	R	R	R	R	R	R	R
COOLING SYSTEM													
Cooling system					I								I
Engine coolant	FL22 type*1	Replace at first 190,000 km or 10 years; after that, every 60,000 km or 3 years											
	Others				R								R
Engine coolant level		I	I	I	I	I	I	I	I	I	I	I	I
FUEL SYSTEM													
Air filter			C		R		C		R		C		R
Fuel lines and hoses					I*2								I
Hoses and tubes for emission					I*2								I
Fuel filter					R								R
IGNITION SYSTEM													
Spark plugs		Replace every 60,000 km											
ELECTRICAL SYSTEM													
Function of all lights		I	I	I	I	I	I	I	I	I	I	I	I
CHASSIS and BODY													
Brake lines, hoses and connections					I				I				I
Brake fluid level			I				I		I		I		
Brake fluid					R								R
Disc brakes			I		I		I		I		I		I
Tire (Rotation)		Rotate every 10,000 km											
Tire inflation pressure and tire wear			I		I		I		I		I		I
Steering operation and linkages			I		I		I		I		I		I
Power steering fluid level			I		I		I		I		I		I
Front and rear suspension, ball joints and wheel bearing axial play					I				I				I
Rear differential oil (AWD)		*3*4											
Driveshaft dust boots					I				I				I
Bolts and nuts on chassis and body					T				T				T
Exhaust system and heat shields					I				I				I
All locks and hinges			L		L		L		L		L		L
Washer fluid level			I		I		I		I		I		I

Scheduled Maintenance

Maintenance Interval	Number of months or kilometers, whichever comes first												
	Months	39	42	45	48	51	54	57	60	63	66	69	72
	×1000 km	65	70	75	80	85	90	95	100	105	110	115	120
AIR CONDITIONER SYSTEM													
Cabin air filter					R				R				R

Chart symbols:

I: Inspect: Inspect and clean, repair, adjust, fill up, or replace if necessary.
R: Replace
C: Clean
T: Tighten
L: Lubricate

Remarks:

*1 Use FL22 type coolant in vehicles with the inscription “FL22” on the radiator cap itself or the surrounding area. Use FL22 when replacing the coolant.
*2 According to state/provincial and federal regulations, failure to perform maintenance on these items will not void your emissions warranties. However, Mazda recommends that all maintenance services be performed at the recommended time or kilometer period to ensure long-term reliability.
*3 If the vehicle is operated primarily under any of the following conditions, replace the rear differential oil at every 40,000 km.
a) Towing a trailer or using a car-top carrier
b) Driving in dusty, sandy or wet conditions
c) Extended periods of idling or low speed operation
d) Repeated short trips of less than 16 km
*4 If this component has been submerged in water, the oil should be replaced.

Owner Maintenance Schedule

The owner or a qualified service technician should make these vehicle inspections at the indicated intervals to ensure safe and dependable operation.

Bring any problem to the attention of an Authorized Mazda Dealer or qualified service technician as soon as possible.

▼When Refueling

- Brake fluid level (page 8-25)
- Engine coolant level (page 8-23)
- Engine oil level (page 8-22)
- Washer fluid level (page 8-26)

▼At Least Monthly

Tire inflation pressures (page 8-34)

▼At Least Twice a Year (For Example, Every Spring and Fall)

- Power steering fluid level (page 8-26)

You can do the following scheduled maintenance items if you have some mechanical ability and a few basic tools and if you closely follow the directions in this manual.

- Engine coolant (page 8-23)
- Engine oil (page 8-21)

Owner Maintenance Precautions

Improper or incomplete service may result in problems. This section gives instructions only for items that are easy to perform.

As explained in the Introduction (page 8-2), several procedures can be done only by a qualified service technician with special tools.

Improper owner maintenance during the warranty period may affect warranty coverage. Refer to Introduction (page 8-2) for owner's responsibility in protecting your investment. For details, read the separate Mazda Warranty statement provided with the vehicle. If you are unsure about any servicing or maintenance procedure, have it done by an Authorized Mazda Dealer.

There are strict environmental laws regarding the disposal of waste oil and fluids. Please dispose of your waste properly and with due regard to the environment.

We recommend that you entrust the oil and fluid changes of your vehicle to an Authorized Mazda Dealer.

⚠ WARNING

Do not perform maintenance work if you lack sufficient knowledge and experience or the proper tools and equipment to do the work. Have maintenance work done by a qualified technician:

Performing maintenance work on a vehicle is dangerous if not done properly. You can be seriously injured while performing some maintenance procedures.

If you must run the engine while working under the hood, make certain that you remove all jewelry (especially rings, bracelets, watches, and necklaces) and all neckties, scarves, and similar loose clothing before getting near the engine or cooling fan which may turn on unexpectedly:

Working under the hood with the engine running is dangerous. It becomes even more dangerous when you wear jewelry or loose clothing.
Either can become entangled in moving parts and result in injury.

Switch the ignition to off and make sure the fan is not running before attempting to work near the cooling fan:

Working near the cooling fan when it is running is dangerous. The fan could continue running indefinitely even if the engine has stopped and the engine compartment temperature is high. You could be hit by the fan and seriously injured.

Do not leave items in the engine compartment:

After you have finished checking or doing servicing in the engine compartment, do not forget and leave items such as tools or rags in the engine compartment.
Tools or other items left in the engine compartment could cause engine damage or a fire leading to an unexpected accident.

Engine Compartment Overview

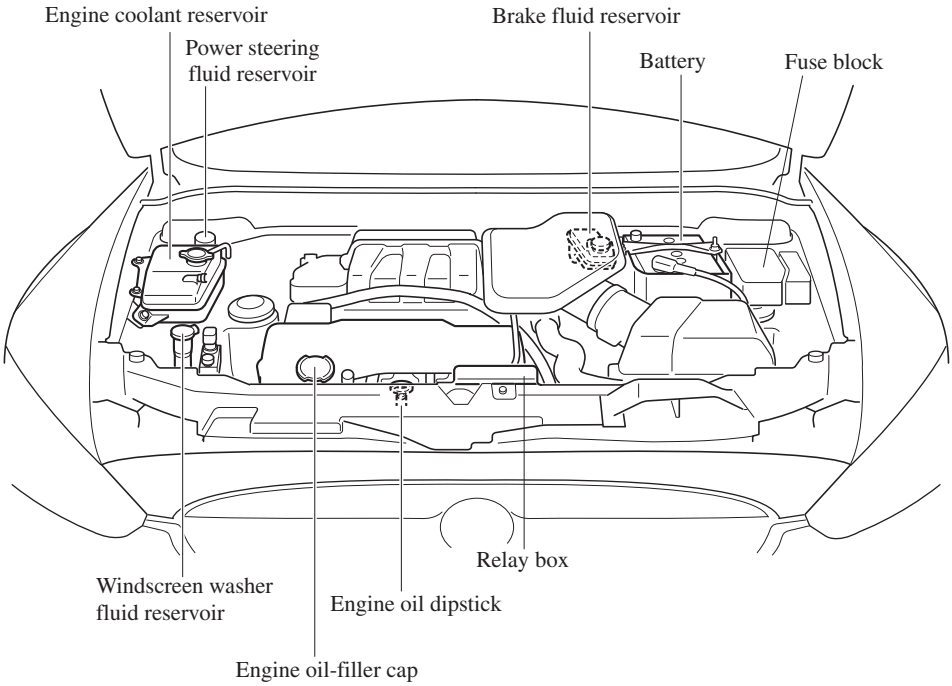

Engine Oil

NOTE
Changing the engine oil should be performed by an Authorized Mazda Dealer.
Refer to Introduction (page 8-2) for owner's responsibility in protecting your investment.

▼Recommended Oil

U.S.A. and CANADA

5W-20 recommended:
Mazda Genuine Oil is used in your Mazda vehicle and is the recommended 5W-20 lubricant. Mazda Genuine 5W-20 Oil is required to achieve optimum fuel economy.
Recommended viscosity: SAE 5W-20

For maintenance service, Mazda recommends Mazda Genuine Parts and Castrol® (U.S.A. only).

(ILSAC)

Only use SAE 5W-20 oil with the American Petroleum Institute (API) symbol and ILSAC GF-4/GF-5.
Oil with this trademark symbol conforms to the current engine and emission system protection standards and fuel economy requirements of the International Lubricant Standardization and Approval Committee (ILSAC), comprised of U.S. and Japanese automobile manufacturers.

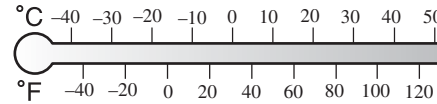

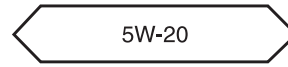

Except U.S.A. and CANADA

Use SAE 5W-20 engine oil.
Oil container labels provide important information.
A chief contribution this type of oil makes to fuel economy is reducing the amount of fuel necessary to overcome engine friction.

For maintenance service, Mazda recommends Mazda Genuine Parts and Castrol® (Mexico only).

(ILSAC)

The quality designation SM, or ILSAC must be on the label.

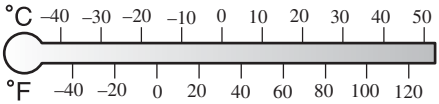

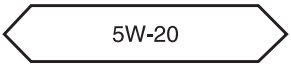

▼Inspecting Engine Oil Level

1. Be sure the vehicle is on a level surface.
2. Warm up the engine to normal operating temperature.
3. Turn it off and wait at least 5 minutes for the oil to return to the oil pan.
4. Pull out the dipstick, wipe it clean, and reinsert it fully.

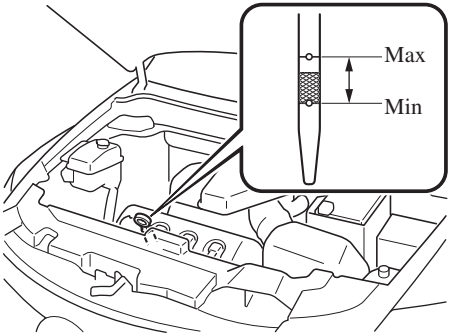

5. Pull it out again and examine the level. The level is normal if it is between MIN and MAX. If it is below MIN, add oil to raise the level within the hatching zone.

⚠ CAUTION

Do not add engine oil over MAX. This may cause engine damage.

6. Make sure the O-ring on the dipstick is positioned properly before reinserting the dipstick.

Engine Coolant

▼Inspecting Coolant Level

WARNING

Do not use a match or live flame in the engine compartment. DO NOT ADD COOLANT WHEN THE ENGINE IS HOT:

A hot engine is dangerous. If the engine has been running, parts of the engine compartment can become very hot. You could be burned. Carefully inspect the engine coolant in the coolant reservoir, but do not open it.

Switch the ignition to off and make sure the fan is not running before attempting to work near the cooling fan:

Working near the cooling fan when it is running is dangerous. The fan could continue running indefinitely even if the engine has stopped and the engine compartment temperature is high. You could be hit by the fan and seriously injured.

✓ Do not remove either cooling system cap when the engine and radiator are hot:

When the engine and radiator are hot, scalding coolant and steam may shoot out under pressure and cause serious injury.

NOTE

Changing the coolant should be done by an Authorized Mazda Dealer.

Inspect the antifreeze protection and coolant level in the coolant reservoir at least once a year—at the beginning of the winter season—and before traveling where temperatures may drop below freezing.

Inspect the condition and connections of all cooling system and heater hoses. Replace any that are swollen or deteriorated.

The coolant should be at full in the radiator and between the F and L marks on the coolant reservoir when the engine is cool.

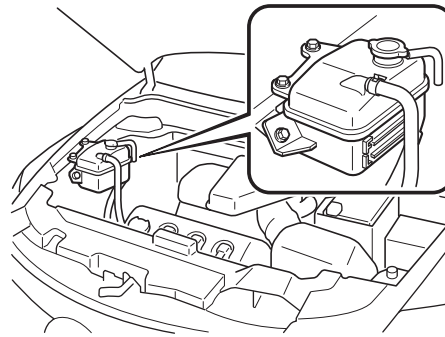

If it is at or near L, add enough coolant to the coolant reservoir to provide freezing and corrosion protection and to bring the level to F.
Securely tighten the coolant reservoir tank cap after adding coolant.

CAUTION

- *Radiator coolant will damage paint.*
  Rinse it off quickly if spilled.
- *Use only soft (demineralized) water in the coolant mixture.*
  Water that contains minerals will cut down on the coolant's effectiveness.
- *Do not add only water. Always add a proper coolant mixture.*
- *The engine has aluminum parts and must be protected by an ethylene-glycol-based coolant to prevent corrosion and freezing.*
- *DO NOT USE coolants Containing Alcohol, methanol, Borate or Silicate.*
  These coolants could damage the cooling system.
- *DO NOT MIX alcohol or methanol with the coolant. This could damage the cooling system.*
- *Do not use a solution that contains more than 60% antifreeze.*
  This would reduce effectiveness.

NOTE

If the "FL22" mark is shown on or near the cooling system cap, it is recommended to use Mazda Genuine FL22 engine coolant (page 8-4).

If the coolant reservoir is empty or new coolant is required frequently, consult an Authorized Mazda Dealer.

Brake Fluid

▼Inspecting Brake Fluid Level

Inspect the fluid level in the reservoir regularly. It should be kept at MAX.
The level normally drops with accumulated distance, a condition associated with wear of brake linings. If it is excessively low, have the brake system inspected by an Authorized Mazda Dealer.

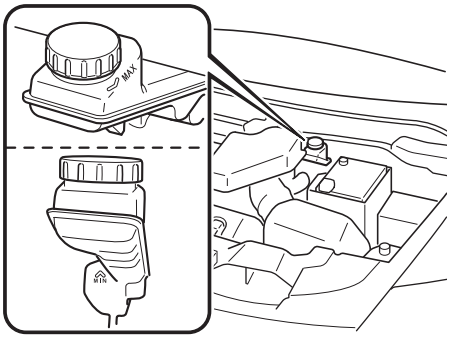

▼Adding Brake Fluid

⚠ WARNING

Be careful not to spill brake fluid on yourself or on the engine:

Spilled brake fluid is dangerous. If it gets in your eyes, they could be seriously injured. If this happens, immediately flush your eyes with water and get medical attention. Brake fluid spilled on a hot engine could cause a fire.

If the brake fluid level is low, have the brakes inspected:

Low brake fluid levels are dangerous. Low levels could signal brake lining wear or a brake system leak. Your brakes could fail and cause an accident.

If the fluid level is low, add fluid until it reaches MAX.
Before adding fluid, thoroughly clean the area around the cap.

⚠ CAUTION

- *Brake fluid will damage painted surfaces. If brake fluid does get on a painted surface, wash it off with water immediately.*
- *Using nonspecified brake fluids (page 10-4) will damage the system. Mixing different fluids will also damage it.*
  If the brake system frequently requires new fluid, consult an Authorized Mazda Dealer.

Power Steering Fluid

▼Inspecting Power Steering Fluid Level

⚠ CAUTION

To avoid damage to the power steering pump, don't operate the vehicle for long periods when the power steering fluid level is low.

NOTE

Use specified power steering fluid (page 10-4).

Inspect the fluid level in the reservoir at each engine oil change with the engine off and cold. Add fluid if necessary; it does not require periodic changing.

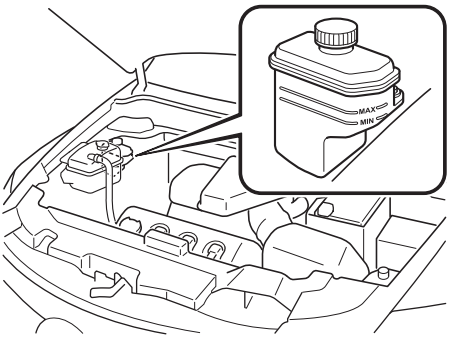

The level must be kept between MAX and MIN.

Visually examine the lines and hoses for leaks and damage.

If new fluid is required frequently, consult an Authorized Mazda Dealer.

Washer Fluid

▼Inspecting Washer Fluid Level

⚠ WARNING

Use only windshield washer fluid or plain water in the reservoir:

Using radiator antifreeze as washer fluid is dangerous. If sprayed on the windshield, it will dirty the windshield, affect your visibility, and could result in an accident.

Using Washer Fluid Without Anti-freeze Protection in Cold Weather:

Operating your vehicle in temperatures below 4 degrees C (40 degrees F) using washer fluid without anti-freeze protection is dangerous as it could cause impaired windshield vision and result in an accident. In cold weather, always use washer fluid with anti-freeze protection.

NOTE

State or local regulations may restrict the use of volatile organic compounds (VOCs), which are commonly used as anti-freeze agents in washer fluid. A washer fluid with limited VOC content should be used only if it provides adequate freeze resistance for all regions and climates in which the vehicle will be operated.

Inspect fluid level in the washer fluid reservoir; add fluid if necessary.

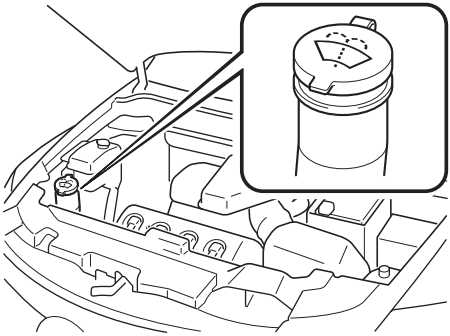

Use plain water if washer fluid is unavailable.
But use only washer fluid in cold weather to prevent it from freezing.

NOTE
Front and rear washer fluid is supplied from the same reservoir.

Body Lubrication

All moving points of the body, such as door and hood hinges and locks, should be lubricated each time the engine oil is changed. Use a nonfreezing lubricant on locks during cold weather.

Make sure the hood's secondary latch keeps the hood from opening when the primary latch is released.

Wiper Blades

CAUTION

- *Hot waxes applied by automatic car washers have been known to affect the wiper's ability to clean windows.*
- *To prevent damage to the wiper blades, do not use gasoline, kerosene, paint thinner, or other solvents on or near them.*
- *When the wiper lever is in the AUTO position and the ignition is switched ON, the wipers may move automatically in the following cases:*
  - *If the windshield above the rain sensor is touched.*
  - *If the windshield above the rain sensor is wiped with a cloth.*
  - *If the windshield is struck with a hand or other object.*
  - *If the rain sensor is struck with a hand or other object from inside the vehicle.*

  Be careful not to pinch hands or fingers as it may cause injury, or damage the wipers. When washing or servicing your Mazda, make sure the wiper lever is in the OFF position.

Contamination of either the windshield or the blades with foreign matter can reduce wiper effectiveness. Common sources are insects, tree sap, and hot wax treatments used by some commercial car washes.

If the blades are not wiping properly, clean the window and blades with a good cleaner or mild detergent; then rinse thoroughly with clean water. Repeat if necessary.

▼Replacing Windshield Wiper Blades

When the wipers no longer clean well, the blades are probably worn or cracked. Replace them.

CAUTION

To prevent damage to the wiper arms and other components, don't try to sweep the wiper arm by hand.

NOTE

To prevent damage to the wiper arm blades when raising both the driver and passenger side wiper arms, raise the driver side wiper arm first. Conversely, when setting down the wiper arms, set the passenger side wiper arm down first.

1. Raise the wiper arm.
2. Open the clip and slide the blade assembly in the direction of the arrow.
3. Wrap a flathead screwdriver or similar tool with a soft cloth to prevent damage to the clip.

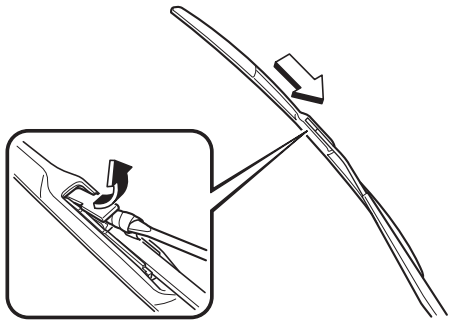

NOTE

Using a soft cloth-wrapped flathead screwdriver.

4. Tilt the blade assembly and remove it from the arm.

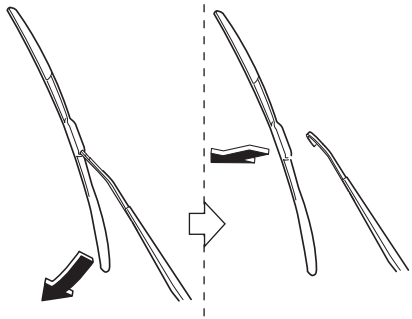

CAUTION

To prevent damage to the windshield let the wiper arm down easily, don't let it slap down on the windshield.

5. Pull down the blade rubber and slide it out of blade holder.

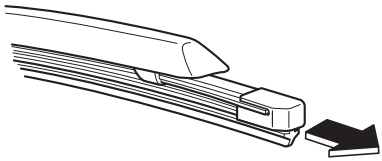

6. Remove the metal stiffeners from each blade rubber and install them in the new blade.

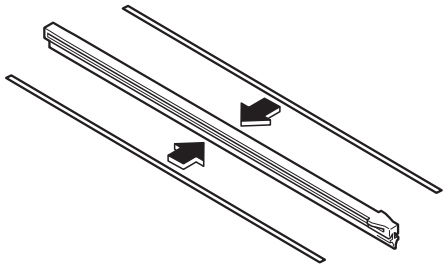

CAUTION

- *Don't bend or discard the stiffeners. You need to use them again.*
- *If the metal stiffeners are switched, the blade's wiping efficiency could be reduced.*
  So don't use the driver's side metal stiffeners on the passenger's side, or vice versa.
- *Be sure to reinstall the metal stiffeners in the new blade rubber so that the curve is the same as it was in the old blade rubber.*

7. Carefully insert the new blade rubber. Then install the blade assembly in the reverse order of removal.

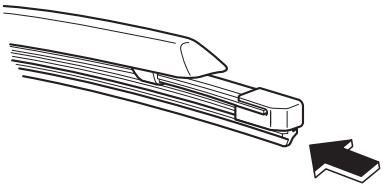

▼Replacing Rear Window Wiper Blade

When the wiper no longer cleans well, the blade is probably worn or cracked. Replace it.

⚠ CAUTION

To prevent damage to the wiper arm and other components, don't try to sweep the wiper arm by hand.

1. Remove the cover and raise the wiper arm.

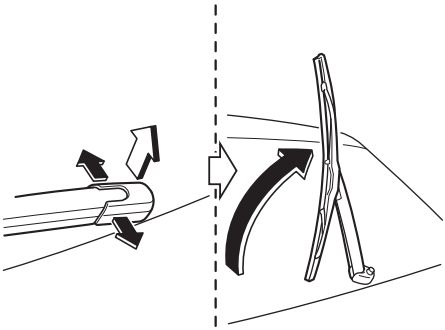

2. Firmly rotate the wiper blade to the right until it unlocks, then remove the blade.

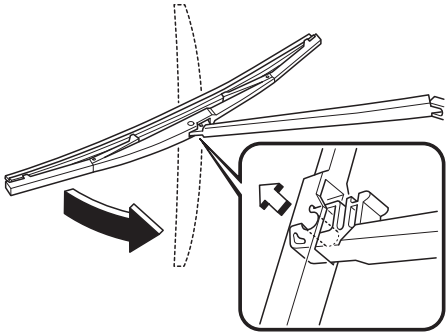

⚠ CAUTION

To prevent damage to the rear window let the wiper arm down easily, don't let it slap down on the rear window.

3. Pull down the blade rubber and slide it out of the blade holder.

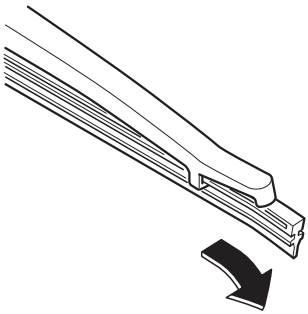

4. Remove the metal stiffeners from each blade rubber and install them in the new blade.

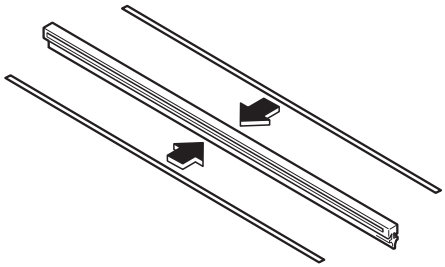

⚠ CAUTION

Don't bend or discard the stiffeners. You need to use them again.

5. Carefully insert the new blade rubber. Then install the blade assembly in the reverse order of removal.

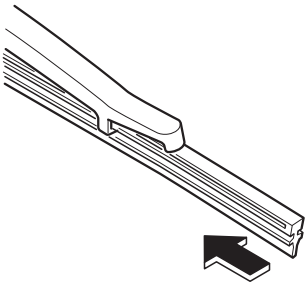

Battery

WARNING

Wash hands after handling the battery and related accessories:

Battery posts, terminals and related accessories contain lead and lead compounds, chemicals known to the State of California to cause cancer and reproductive harm.

Read the following precautions carefully before using the battery or inspecting to ensure safe and correct handling:

Always wear eye protection when working near the battery:

Working without eye protection is dangerous. Battery fluid contains SULFURIC ACID which could cause blindness if splashed into your eyes. Also, hydrogen gas produced during normal battery operation, could ignite and cause the battery to explode.

Wear eye protection and protective gloves to prevent contact with battery fluid:

Spilled battery fluid is dangerous.
Battery fluid contains SULFURIC ACID which could cause serious injuries if it gets in eyes, or on the skin or clothing. If this happens, immediately flush your eyes with water for 15 minutes or wash your skin thoroughly and get medical attention.

Always keep batteries out of the reach of children:

Allowing children to play near batteries is dangerous. Battery fluid could cause serious injuries if it gets in the eyes or on the skin.

Keep flames and sparks away from open battery cells and do not allow metal tools to contact the positive (+) or negative (–) terminal of the battery when working near a battery. Do not allow the positive (+) terminal to contact the vehicle body:

Flames and sparks near open battery cells are dangerous. Hydrogen gas, produced during normal battery operation, could ignite and cause the battery to explode. An exploding battery can cause serious burns and injuries. Keep all flames including cigarettes and sparks away from open battery cells.

Keep all flames, including cigarettes, and sparks away from open battery cells: *Flames and sparks near open battery cells are dangerous. Hydrogen gas, produced during normal battery operation, could ignite and cause the battery to explode. An exploding battery can cause serious burns and injuries.*

▼Battery Maintenance

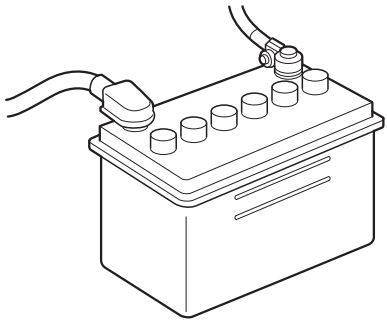

To get the best service from a battery:

- Keep it securely mounted.
- Keep the top clean and dry.
- Keep terminals and connections clean, tight, and coated with petroleum jelly or terminal grease.
- Rinse off spilled electrolyte immediately with a solution of water and baking soda.
- If the vehicle will not be used for an extended time, disconnect the battery cables.

When replacing the battery, refer to the specification charts (page 10-4).

Tires

For reasons of proper performance, safety, and better fuel economy, always maintain recommended tire inflation pressures and stay within the recommended load limits and weight distribution.

⚠ WARNING

Using Different Tire Types:

Driving your vehicle with different types of tires is dangerous. It could cause poor handling and poor braking; leading to loss of control. Except for the limited use of the temporary spare tire, use only the same type tires (radial, bias-belted, bias-type) on all four wheels.

Using Wrong-Sized Tires:

Using any other tire size than what is specified for your Mazda (page 10-6) is dangerous. It could seriously affect ride, handling, ground clearance, tire clearance, and speedometer calibration. This could cause you to have an accident. Use only tires that are the correct size specified for your Mazda.

▼Tire Inflation Pressure

⚠ WARNING

Always inflate the tires to the correct pressure:

Overinflation or underinflation of tires is dangerous. Adverse handling or unexpected tire failure could result in a serious accident.
Refer to Tires on page 10-6.

Use only a Mazda-genuine tire valve cap:

Use of a non-genuine part is dangerous as the correct tire air pressure cannot be maintained if the tire valve becomes damaged. If the vehicle is driven under this condition, the tire air pressure will decrease which could result in a serious accident. Do not use any part for the tire valve cap that is not a Mazda-genuine part.

The Tire Pressure Monitoring System* does not alleviate the need to check the tire condition every day, including whether the tires all look inflated properly. Inspect all tire pressure monthly (including the spare) when the tires are cold. Maintain recommended pressures for the best ride, handling, and minimum tire wear.
When checking the tire pressures, use of a digital tire pressure gauge is recommended.

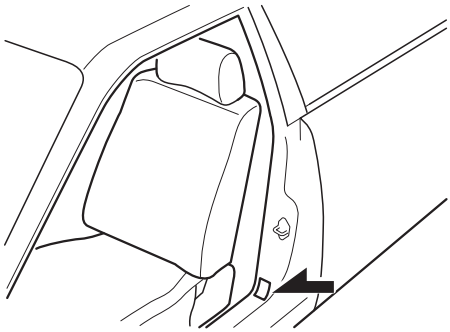

Refer to the specification charts (page 10-6).

NOTE

- *Always check tire pressure when tires are cold.*
- *Warm tires normally exceed recommended pressures. Don't release air from warm tires to adjust the pressure.*
- *Underinflation can cause reduced fuel economy, uneven and accelerated tire wear, and poor sealing of the tire bead, which will deform the wheel and cause separation of tire from rim.*
- *Overinflation can produce a harsh ride, uneven and accelerated tire wear, and a greater possibility of damage from road hazards.*
  Keep your tire pressure at the correct levels. If one frequently needs inflating, have it inspected.

▼Tire Rotation

⚠ WARNING

Rotate tires periodically:

Irregular tire wear is dangerous. To equalize tread wear for maintaining good performance in handling and braking, rotate the tires according to the scheduled maintenance charts. Refer to Scheduled Maintenance on page 8-4.

*Some models.

During rotation, inspect them for correct balance.

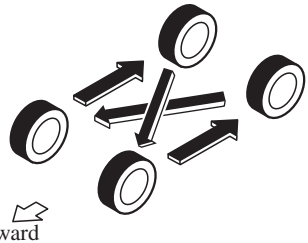

Do not include (TEMPORARY USE ONLY) spare tire in rotation.

Also, inspect them for uneven wear and damage. Abnormal wear is usually caused by one or a combination of the following:

- Incorrect tire pressure
- Improper wheel alignment
- Out-of-balance wheel
- Severe braking

After rotation, inflate all tire pressures to specification (page 10-6) and inspect the lug nuts for tightness.

CAUTION

Rotate unidirectional tires and radial tires that have an asymmetrical tread pattern or studs only from front to rear, not from side to side. Tire performance will be reduced if rotated from side to side.

▼Replacing a Tire

WARNING

Always use tires that are in good condition:

Driving with worn tires is dangerous. Reduced braking, steering, and traction could result in an accident.

Replace all four tires at the same time:

Replacing just one tire is dangerous. It could cause poor handling and poor braking resulting in loss of vehicle control. Mazda strongly recommends that you replace all four tires at the same time.

CAUTION

(With Tire Pressure Monitoring System)

When replacing/repairing the tires or wheels or both, have the work done by an Authorized Mazda Dealer, or the tire pressure sensors may be damaged.

NOTE

(With Tire Pressure Monitoring System)

- *When tires with steel wire reinforcement in the sidewalls are used, the system may not function correctly even with a genuine wheel.*
  Refer to System Error Activation on page 5-32.
- *Be sure to install the tire pressure sensors whenever tires or wheels are replaced.*
  Refer to Tires and Wheels on page 5-32.

If a tire wears evenly, a wear indicator will appear as a solid band across the tread.
Replace the tire when this happens.

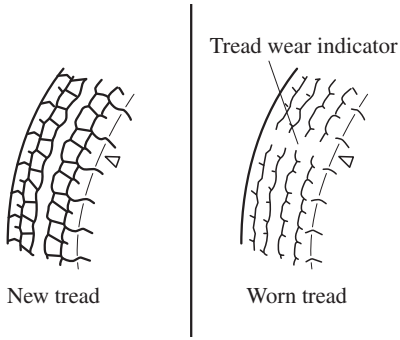

You should replace the tire before the band crosses the entire tread.

NOTE
Tires degrade over time, even when they are not being used on the road. It is recommended that tires generally be replaced when they are 6 years or older. Heat caused by hot climates or frequent high loading conditions can accelerate the aging process. You should replace the spare tire when you replace the other road tires due to the aging of the spare tire. The period in which the tire was manufactured (both week and year) is indicated by a 4-digit number.
Refer to Tire Labeling on page 9-25.

▼Temporary Spare Tire

Inspect the temporary spare tire at least monthly to make sure it's properly inflated and stored.

NOTE
The temporary spare tire condition gradually deteriorates even if it has not been used.

The temporary spare tire is easier to handle because of its construction which is lighter and smaller than a conventional tire. This tire should be used only for an emergency and only for a short distance.

Use the temporary spare tire only until the conventional tire is repaired, which should be as soon as possible.

(Except Mexico)
Maintain its pressure at 420 kPa (4.2 kgf/cm^2 or bar, 60 psi).
(Mexico)
Maintain its pressure at 250 kPa (2.5 kgf/cm^2 or bar, 36 psi).

⚠ CAUTION

- *Do not use your temporary spare tire rim with a snow tire or a conventional tire. Neither will properly fit and could damage both tire and rim.*
- *The temporary spare tire has a tread life of less than 5,000 km. The tread life may be shorter depending on driving conditions.*
- *The temporary spare tire is for limited use, however, if the tread wear solid-band indicator appears, replace the tire with the same type of temporary spare (page 8-36).*

NOTE
Tires degrade over time, even when they are not being used on the road. It is recommended that tires generally be replaced when they are 6 years or older. Heat caused by hot climates or frequent high loading conditions can accelerate the aging process. You should replace the spare tire when you replace the other road tires due to the aging of the spare tire. The period in which the tire was manufactured (both week and year) is indicated by a 4-digit number.
Refer to Tire Labeling on page 9-25.

▼Replacing a Wheel

⚠ WARNING

Always use wheels of the correct size on your vehicle:
Using a wrong-sized wheel is dangerous. Braking and handling could be affected, leading to loss of control and an accident.

⚠ CAUTION

- *A wrong-sized wheel may adversely affect:*
  - *Tire fit*
  - *Wheel and bearing life*
  - *Ground clearance*
  - *Snow-chain clearance*
  - *Speedometer calibration*
  - *Headlight aim*
  - *Bumper height*
  - *Tire Pressure Monitoring System*
- ***(With Tire Pressure Monitoring System)***
  - *When replacing/repairing the tires or wheels or both, have the work done by an Authorized Mazda Dealer, or the tire pressure sensors may be damaged.*
  - *The wheels equipped on your Mazda are specially designed for installation of the tire pressure sensors. Do not use non-genuine wheels, otherwise it may not be possible to install the tire pressure sensors.*

NOTE
Be sure to install the tire pressure sensors whenever tires or wheels are replaced. *Refer to Tires and Wheels on page 5-32.*

When replacing a wheel, make sure the new one is the same as the original factory wheel in diameter, rim width, and offset (inset/outset).

Proper tire balancing provides the best riding comfort and helps reduce tread wear. Out-of-balance tires can cause vibration and uneven wear, such as cupping and flat spots.

MEMO

Light Bulbs

With xenon fusion headlights

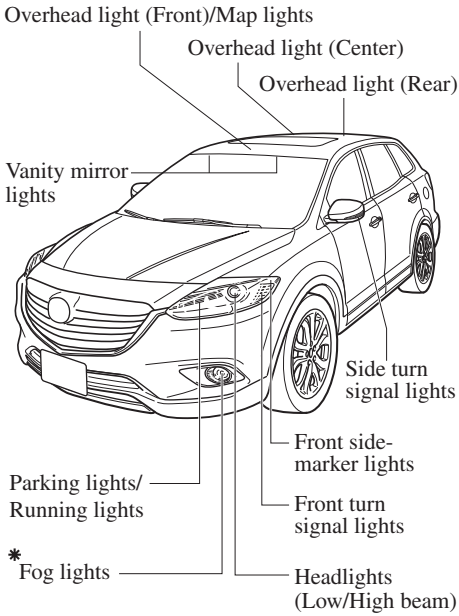

With halogen headlights

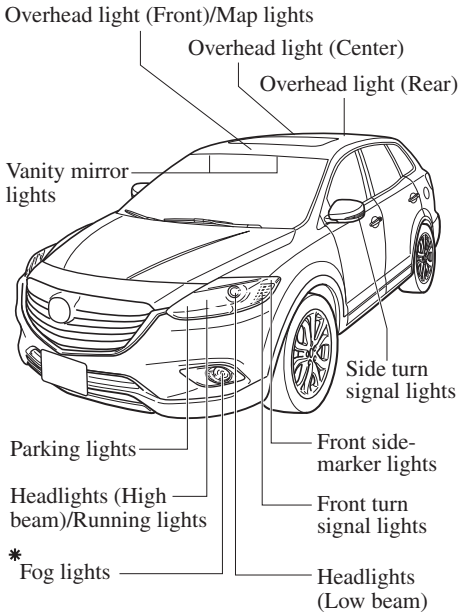

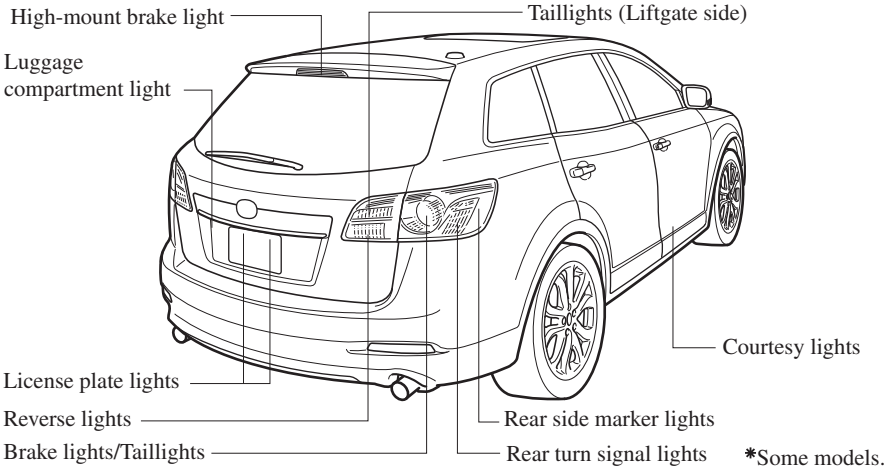

*Some models.

⚠ WARNING

Do not replace the xenon fusion bulbs yourself:

Replacing the xenon fusion bulbs yourself is dangerous. Because the xenon fusion bulbs require high voltage, you could receive an electric shock if the bulbs are handled incorrectly. Consult an Authorized Mazda Dealer when the replacement is necessary.

Never touch the glass portion of a halogen bulb with your bare hands and always wear eye protection when handling or working around the bulbs:

When a halogen bulb breaks, it is dangerous. These bulbs contain pressurized gas. If one is broken, it will explode and serious injuries could be caused by the flying glass. If the glass portion is touched with bare hands, body oil could cause the bulb to overheat and explode when lit.

Always keep halogen bulbs out of the reach of children:

Playing with a halogen bulb is dangerous. Serious injuries could be caused by dropping a halogen bulb or breaking it some other way.

▼Replacing Exterior Light Bulbs

Headlights (With xenon fusion headlights)

Low/High beam bulbs

You cannot replace the low/high beam bulbs by yourself. The bulbs must be replaced at an Authorized Mazda Dealer.

Headlights (With halogen headlights)

High-beam bulbs

1. Make sure the ignition is switched off, and the headlight switch is off.
2. Lift the hood.
3. Turn the cover counterclockwise and remove it.

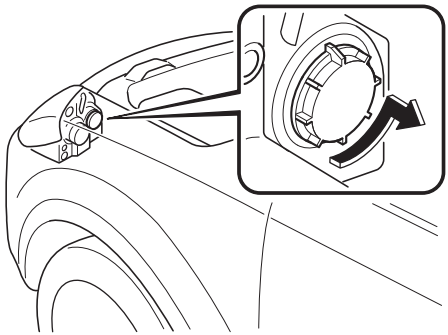

4. Disconnect the electrical connector from the bulb by pulling the tab on the connector with your finger and pulling the connector downward.

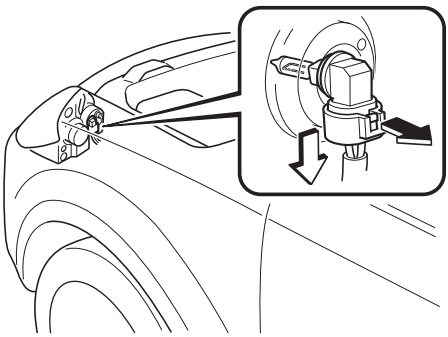

5. Turn the socket and bulb assembly to remove it. Carefully remove the bulb from its socket in the reflector by gently pulling it straight backward out of the socket.

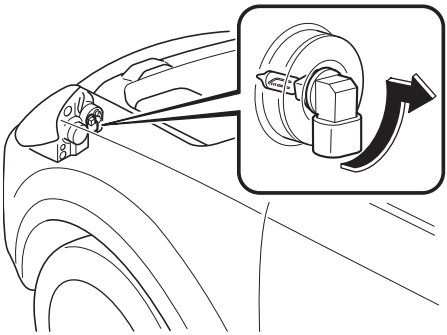

6. Install the new bulb in the reverse order of the removal procedure.

NOTE

- *To replace the bulb, contact an Authorized Mazda Dealer*
- *If the halogen bulb is accidentally touched, it should be cleaned with rubbing alcohol before being used.*
- *Use the protective cover and carton of the replacement bulb to dispose of the old bulb promptly out of the reach of children.*

Low-beam bulbs

1. Make sure the ignition is switched off, and the headlight switch is off.
2. Lift the hood.
3. **(Right side)**
   Remove the attachment bolts and the coolant reservoir before replacing the light bulb.

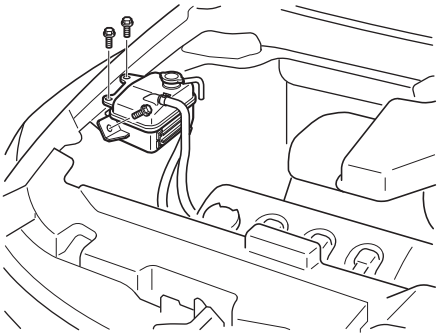

4. Turn the cover counterclockwise and remove it.

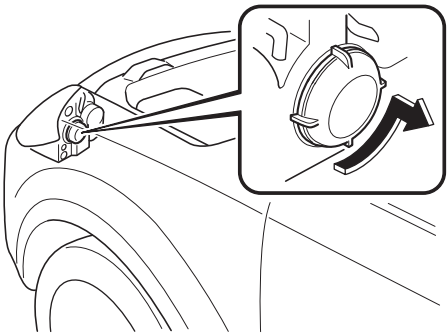

5. Disconnect the electrical connector from the bulb by pulling the tab on the connector with your finger and pulling the connector downward.

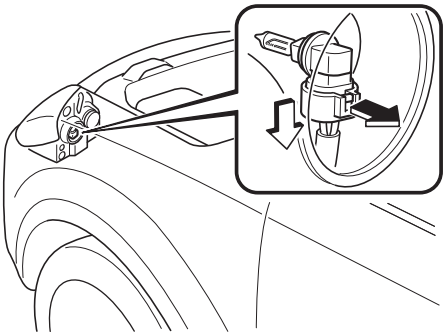

6. Turn the socket and bulb assembly to remove it. Carefully remove the bulb from its socket in the reflector by gently pulling it straight backward out of the socket.

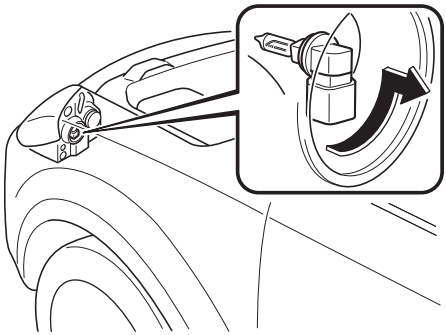

7. Install the new bulb in the reverse order of the removal procedure.
8. Install the coolant reservoir. If you are unsure of how tight the bolts should be, have them inspected at an Authorized Mazda Dealer.

Bolt tightening torque	
N·m (kgf·m, ft·lbf)	6.9—11.8 (0.7—1.2, 5.1—8.7)

NOTE

- *To replace the bulb, contact an Authorized Mazda Dealer*
- *If the halogen bulb is accidentally touched, it should be cleaned with rubbing alcohol before being used.*
- *Use the protective cover and carton of the replacement bulb to dispose of the old bulb promptly out of the reach of children.*

Running lights/Parking lights (With xenon fusion headlights)

Due to the complexity and difficulty of the procedure, the LED bulbs must be replaced by an Authorized Mazda Dealer.

NOTE

LED bulb replacement is not possible because it is built into the unit. Replace the unit.

Parking lights (With halogen headlights)

1. Make sure the ignition is switched off, and the headlight switch is off.
2. Lift the hood.
3. Turn the cover counterclockwise and remove it.

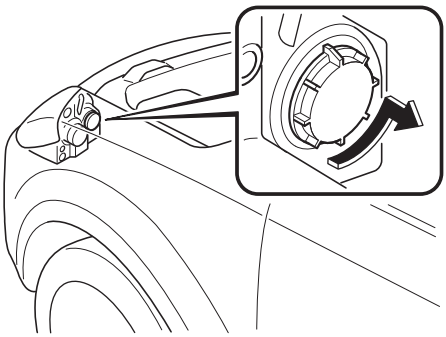

4. Turn the socket and bulb assembly counterclockwise and remove it.

5. Remove the bulb by pushing it in slightly and turning it counterclockwise.

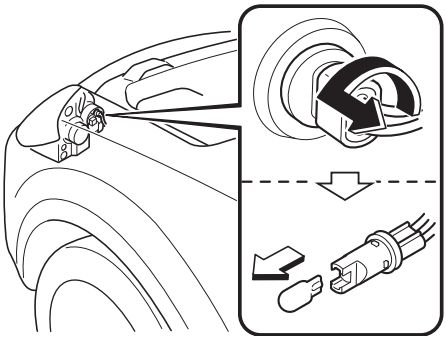

6. Install the new bulb in the reverse order of the removal procedure.

Front side-marker lights, Front turn signal lights

1. Make sure the ignition is switched off, and the headlight switch is off.
2. Lift the hood.
3. **(Right side)**
   Remove the attachment bolts and the coolant reservoir before replacing the light bulb.

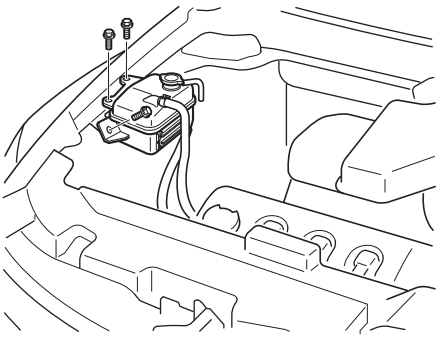

4. Turn the socket and bulb assembly counterclockwise and remove it.
5. Remove the bulb by pushing it in slightly and turning it counterclockwise.

Front side-marker lights

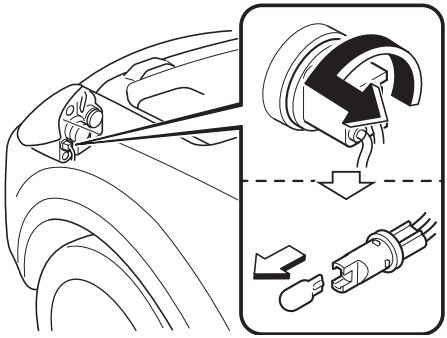

Front turn signal lights

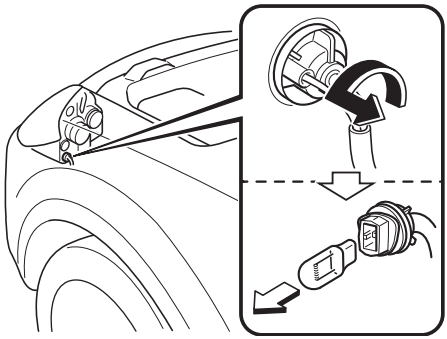

6. Install the new bulb in the reverse order of the removal procedure.
7. Install the coolant reservoir. If you are unsure of how tight the bolts should be, have them inspected at an Authorized Mazda Dealer.

Bolt tightening torque	
N·m (kgf·m, ft·lbf)	6.9—11.8 (0.7—1.2, 5.1—8.7)

Fog lights ✶

1. Make sure the ignition is switched off, and the headlight switch is off.
2. Turn the screws counterclockwise and remove them.
3. Turn the screws and the center section of the plastic retainers counterclockwise and remove them, then remove the mudguard.

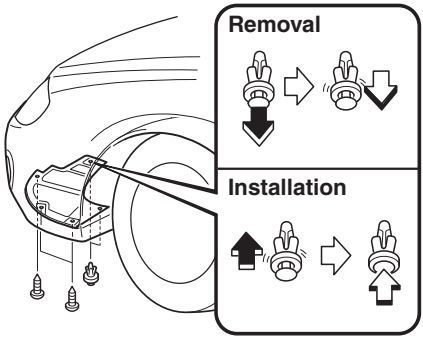

4. Disconnect the electrical connector from the bulb by pressing the tab on the connector with your finger and pulling the connector downward.

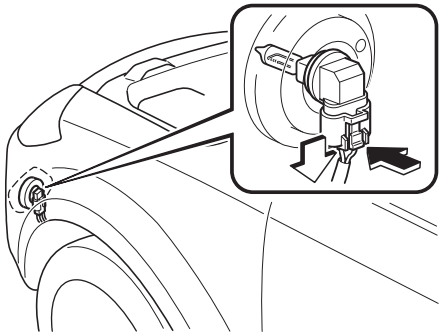

5. Turn the socket and bulb assembly counterclockwise and remove it. Carefully remove the bulb from its socket in the reflector by gently pulling it straight backward out of the socket.

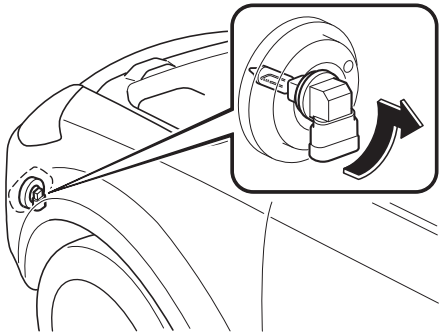

6. Install the new bulb in the reverse order of the removal procedure.

NOTE

- *To replace the bulb, contact an Authorized Mazda Dealer*
- *If the halogen bulb is accidentally touched, it should be cleaned with rubbing alcohol before being used.*
- *Use the protective cover and carton of the replacement bulb to dispose of the old bulb promptly out of the reach of children.*

Side turn signal lights ✶, High-mount brake light

Due to the complexity and difficulty of the procedure, the LED bulbs must be replaced by an Authorized Mazda Dealer.

NOTE

LED bulb replacement is not possible because it is built into the unit. Replace the unit.

Brake lights/Taillights, Rear turn signal lights, Rear side-marker light

1. Make sure the ignition is switched off, and the headlight switch is off.

2. Turn the bolts counterclockwise and remove them.

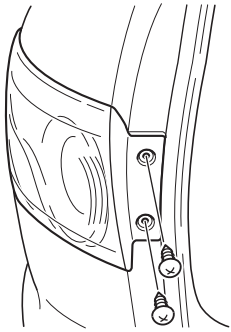

3. Pull the unit rearward to remove it.

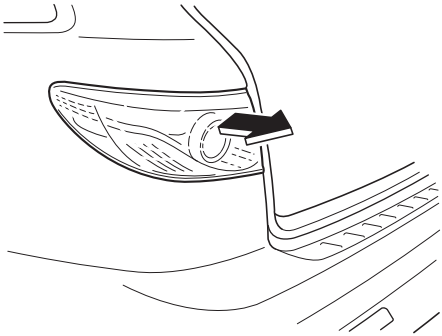

4. Turn the socket and bulb assembly counterclockwise and remove it.

Brake lights/Taillights

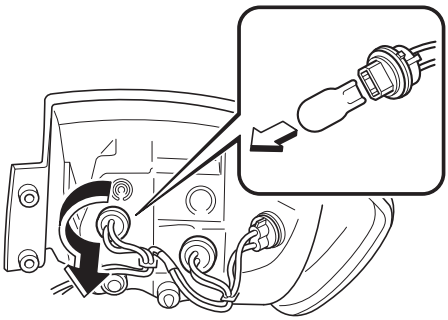

Rear turn signal lights

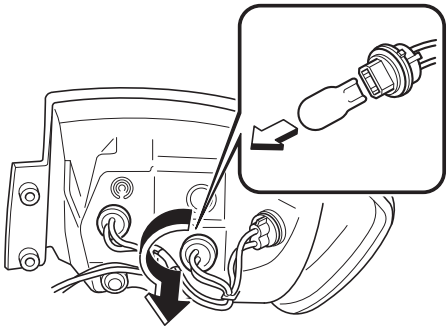

Rear side-marker light

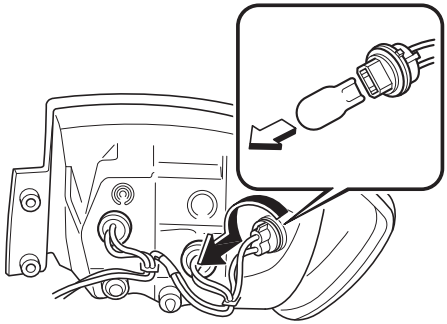

5. Disconnect the bulb from the socket.
6. Install the new bulb in the reverse order of the removal procedure.

Taillights (Liftgate side), Reverse lights

1. Make sure the ignition is switched off, and the headlight switch is off.

2. Remove the cover.

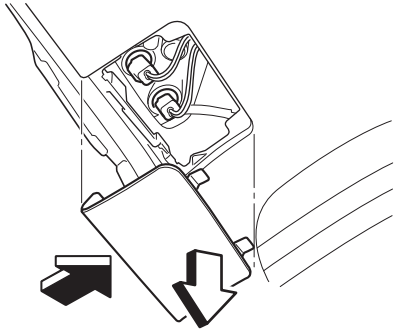

3. Turn the socket and bulb assembly counterclockwise and remove it.
4. Disconnect the bulb from the socket.

Taillights (Liftgate side)

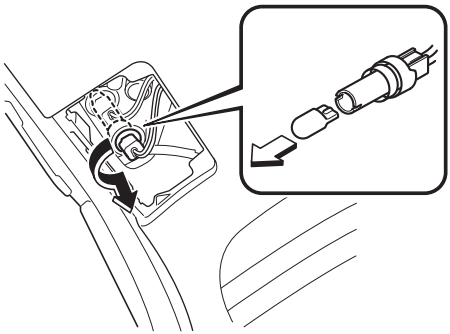

Reverse lights

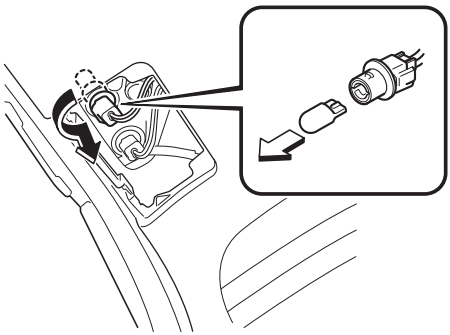

5. Install the new bulb in the reverse order of the removal procedure.

NOTE
To replace the bulb, contact an Authorized Mazda Dealer.

License plate lights

1. Make sure the ignition is switched off, and the headlight switch is off.
2. Wrap a flathead screwdriver with a soft cloth to prevent damage to the lens, and then remove the lens by carefully prying on the edge of the lens with a flathead screwdriver.
3. Disconnect the bulb by pulling it out.

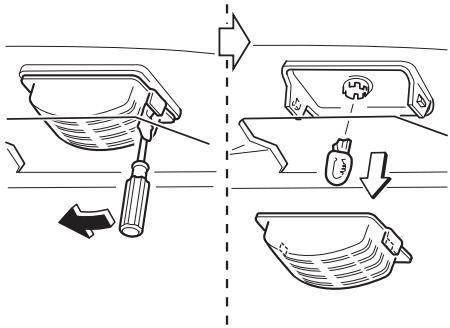

4. Install the new bulb in the reverse order of the removal procedure.

▼Replacing Interior Light Bulbs

Overhead light (Front)/Map lights, Overhead light (Center, Rear), Luggage compartment light, Courtesy lights, Vanity mirror lights

1. Wrap a small flathead screwdriver with a soft cloth to prevent damage to the lens, and then remove the lens by carefully prying on the edge of the lens with the flathead screwdriver.
2. Disconnect the bulb by pulling it out.

Overhead light (Front)/Map lights

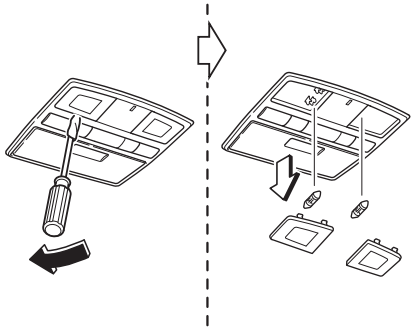

Overhead light (Center, Rear)

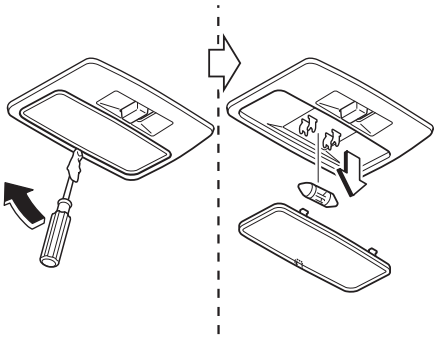

Luggage compartment light

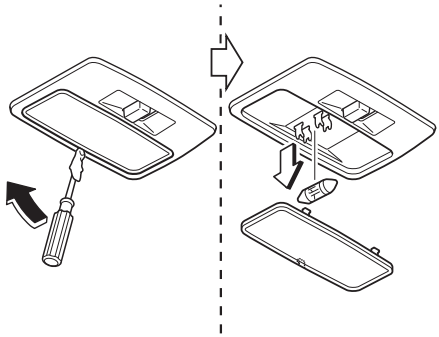

Courtesy lights

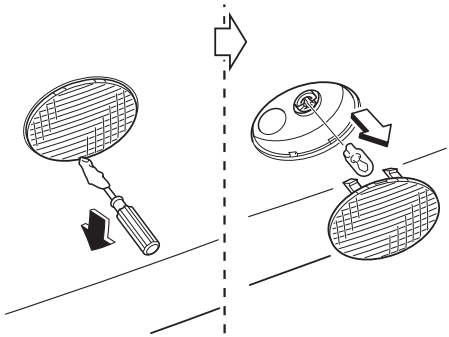

Vanity mirror lights

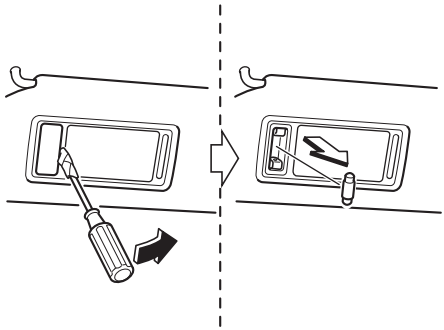

3. Install the new bulb in the reverse order of the removal procedure.

Fuses

Your vehicle's electrical system is protected by fuses.

If any lights, accessories, or controls don't work, inspect the appropriate circuit protector. If a fuse has blown, the inside element will be melted.

If the same fuse blows again, avoid using that system and consult an Authorized Mazda Dealer as soon as possible.

▼Fuse Replacement

Replacing fuses located behind the glove compartment

If an electrical system is inoperative, inspect the fuses located behind the glove compartment.

1. Make sure the ignition is switched off, and other switches are off.
2. Open the glove compartment.
3. Remove the cover.

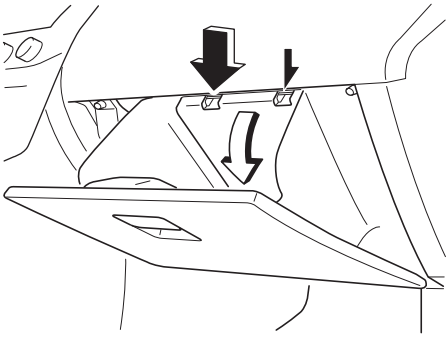

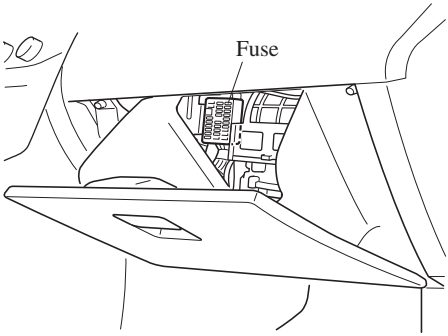

4. Pull the fuse straight out with the fuse puller provided on the fuse block located in the engine compartment.

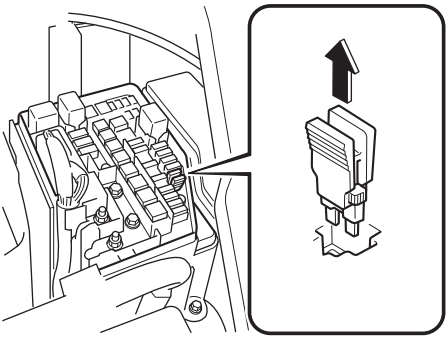

5. Inspect the fuse and replace it if it's blown.

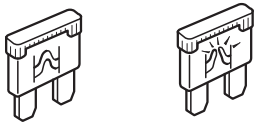

Normal Blown

6. Insert a new fuse of the same amperage rating, and make sure it fits tightly. If it does not fit tightly, have an expert install it. We recommend an Authorized Mazda Dealer.
   If you have no spare fuses, borrow one of the same rating from a circuit not essential to vehicle operation, such as the ROOM circuit.

⚠ CAUTION

Always replace a fuse with one of the same rating. Otherwise you may damage the electric system.

7. Reinstall the cover and make sure that it is securely installed.

Replacing the fuses under the hood

If the headlights or other electrical components do not work and the fuses in the cabin are normal, inspect the fuse block under the hood. If a fuse is blown, it must be replaced. Follow these steps:

1. Make sure the ignition is switched off, and other switches are off.
2. Remove the fuse block cover or the relay box cover.

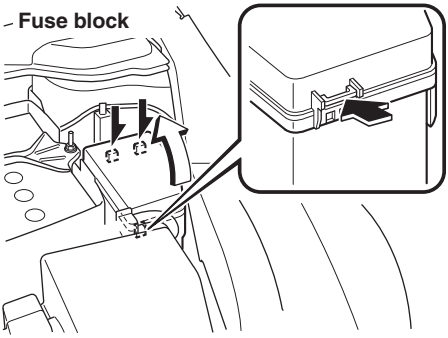

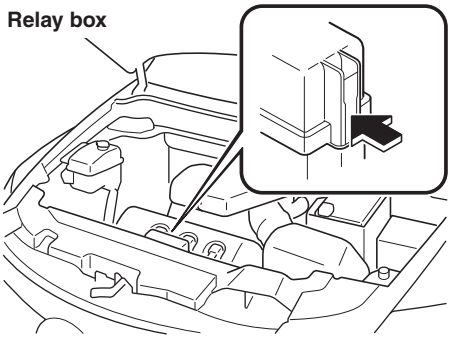

3. If any fuse but the MAIN fuse is blown, replace it with a new one **of the same amperage rating**.

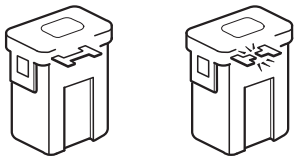

Normal Blown

⚠ WARNING

Do not replace the main fuse by yourself. Have an Authorized Mazda Dealer perform the replacement:

Replacing the fuse by yourself is dangerous because the MAIN fuse is a high current fuse. Incorrect replacement could cause an electrical shock or a short circuit resulting in a fire.

4. Reinstall the cover and make sure that it is securely installed.

▼Fuse Panel Description

Fuse block (Engine compartment)

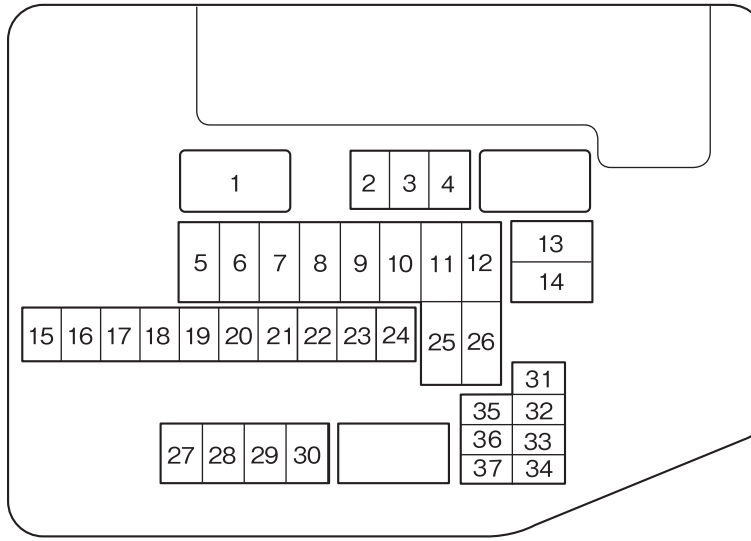

DESCRIPTION		FUSE RATING	PROTECTED COMPONENT
1	MAIN	150 A	For protection of all circuits
2	—	—	—
3	ENGINE	20 A	Engine control system
4	H/L R*1	15 A	Headlight (RH)
	H/L HI RY*2	15 A	For protection of various circuits *
5	R HEATER	40 A	Heater
6	P.SEAT R	30 A	Power seat (RH) *
7	HEATER	50 A	Heater
8	IGKEY 2	40 A	For protection of various circuits
9	FAN 1	30 A *	Cooling fan
		40 A *	
10	P.SEAT L	40 A	Power seat (LH) *
11	DEFOG	30 A	Rear window defroster
12	BTN	50 A	For protection of various circuits
13	FUEL PUMP	30 A	Fuel pump
14	IGKEY 1	30 A	For protection of various circuits
15	FOG	15 A	Fog lights *

*Some models.

DESCRIPTION		FUSE RATING	PROTECTED COMPONENT
16	ABS (SOL)	30 A	ABS
17	D/L	25 A	Power door locks
18	ROOM	15 A	Overhead light
19	OUTLET CTR	15 A	Accessory socket (Center)
20	OUTLET RR	15 A	Accessory socket (Rear)
21	AC PWR	15 A	Moonroof*, DC/AC inverter*
22	S.WARM	15 A	Seat warmer*
23	A/C MAG	10 A	Air conditioner
24	BOSE	25 A	Audio system (Bose® Sound System-equipped model)*
25	FAN 2	30 A*	Cooling fan
		40 A*	
26	ABS	50 A	ABS
27	IG COIL	25 A	Engine control system
28	H/L L*1	15 A	Headlight (LH)
	H/L LOW L*2	15 A	Headlight low beam (LH)
29	—*1	—	—
	H/L LOW R*2	15 A	Headlight low beam (RH)
30	—*1	—	—
	H/L HIGH*2	20 A	Headlight high beam
31	HAZARD	15 A	Hazard warning flashers, Turn signal lights
32	ENG +B	10 A	Engine control system
33	HORN	15 A	Horn
34	STOP	7.5 A	Brake lights
35	EGI INJ	10 A	Engine control system
36	ENG BAR	20 A	Engine control system
37	ENG BAR 2	7.5 A	Engine control system

*1 With xenon fusion headlights
*2 With halogen headlights

 *Some models.

Relay box (Engine compartment)*

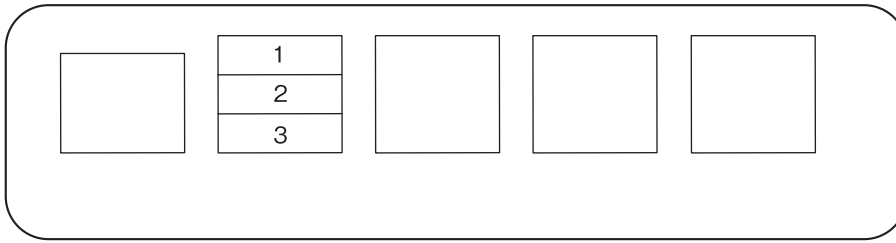

DESCRIPTION		FUSE RATING	PROTECTED COMPONENT
1	INJ	7.5 A	Engine control system
2	—	—	—
3	—	—	—

*Some models.

Fuse block (Glove box)

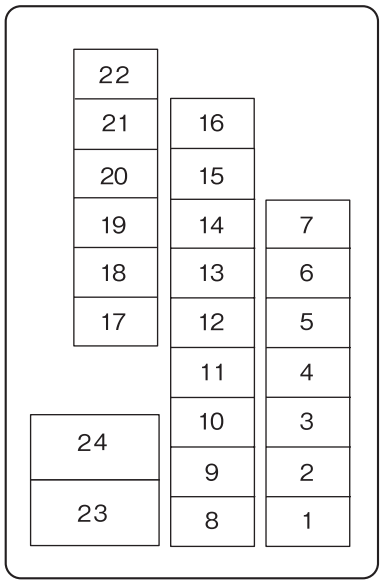

DESCRIPTION		FUSE RATING	PROTECTED COMPONENT
1	OUTLET FR	15 A	Accessory socket (Front)
2	MIRROR	7.5 A	Power control mirror
3	C/U-IG1	15 A	For protection of various circuits
4	METER	10 A	Instrument cluster
5	SAS	7.5 A	ABS, Air bag
6	ENG. IGA	7.5 A	Engine control system
7	STA	7.5 A	Engine control system
8	—	—	—
9	A/C	7.5 A	Air conditioner
10	R.WIPER	15 A	Rear window wiper
11	—	—	—
12	P.LIFT GATE	20 A	Power lift gate *
13	SUNROOF	15 A	Moonroof *
14	AUDIO	10 A	Audio system
15	M.DEF	10 A	Mirror defroster *
16	P/W	25 A	Power windows (Passenger-side)
17	TAIL	10 A	Taillights, Parking lights, License plate lights, Side-marker lights
18	ILLUMI	10 A	Instrument panel illumination

*Some models.

DESCRIPTION		FUSE RATING	PROTECTED COMPONENT
19	INJ	7.5 A	Engine control system
20	—	—	—
21	OUTLET CTR	—	—
22	OUTLET RR	—	—
23	WIPER	30 A	Windshield wiper and washer
24	P.WIND	30 A	Power windows (Driver-side)

How to Minimize Environmental Paint Damage

The paintwork on your Mazda represents the latest technical developments in composition and methods of application.

Environmental hazards, however, can harm the paint's protective properties, if proper care is not taken.

Here are some examples of possible damage, with tips on how to prevent them.

▼Etching Caused by Acid Rain or Industrial Fallout

Occurrence

Industrial pollutants and vehicle emissions drift into the air and mix with rain or dew to form acids. These acids can settle on a vehicle's finish. As the water evaporates, the acid becomes concentrated and can damage the finish.
And the longer the acid remains on the surface, the greater the chance is for damage.

Prevention

It is necessary to wash and wax your vehicle to preserve its finish according to the instructions in this section. These steps should be taken immediately after you suspect that acid rain has settled on your vehicle's finish.

▼Damage Caused by Bird Dropping, Insects, or Tree Sap

Occurrence

Bird droppings contain acids. If these aren't removed they can eat away the clear and color base coat of the vehicle's paintwork.

When insects stick to the paint surface and decompose, corrosive compounds form. These can erode the clear and color base coat of the vehicle's paintwork if they are not removed.

Tree sap will harden and adhere permanently to the paint finish. If you scratch the sap off while it is hard, some vehicle paint could come off with it.

Prevention

It is necessary to have your Mazda washed and waxed to preserve its finish according to the instructions in this section. This should be done as soon as possible.

Bird droppings can be removed with a soft sponge and water. If you are traveling and these are not available, a moistened tissue may also take care of the problem. The cleaned area should be waxed according to the instructions in this section.
Insects and tree sap are best removed with a soft sponge and water or a commercially available chemical cleaner.

Another method is to cover the affected area with dampened newspaper for one to two hours. After removing the newspaper, rinse off the loosened debris with water.

▼Water Marks

Occurrence

Rain, fog, dew, and even tap water can contain harmful minerals such as salt and lime. If moisture containing these minerals settles on the vehicle and evaporates, the minerals will concentrate and harden to form white rings. The rings can damage your vehicle's finish.

Prevention

It is necessary to wash and wax your vehicle to preserve its finish according to the instructions in this section. These steps should be taken immediately after you find water marks on your vehicle's finish.

▼Paint Chipping

Occurrence

Paint chipping occurs when gravel thrown in the air by another vehicle's tires hits your vehicle.

How to avoid paint chipping

Keeping a safe distance between you and the vehicle ahead reduces the chances of having your paint chipped by flying gravel.

NOTE

- *The paint chipping zone varies with the speed of the vehicle. For example, when traveling at 90 km/h (56 mph), the paint chipping zone is 50 m (164 ft).*
- *In low temperatures a vehicle's finish hardens. This increases the chance of paint chipping.*
- *Chipped paint can lead to rust forming on your Mazda. Before this happens, repair the damage by using Mazda touch-up paint according to the instructions in this section. Failure to repair the affected area could lead to serious rusting and expensive repairs.*

Exterior Care

Follow **all** label and container directions when using a chemical cleaner or polish. Read all warnings and cautions.

▼Maintaining the Finish

Washing

⚠ CAUTION

- *When the wiper lever is in the AUTO position and the ignition is switched ON, the wipers may move automatically in the following cases:*
  - *If the windshield above the rain sensor is touched or wiped with a cloth.*
  - *If the windshield is struck with a hand or other object from either outside or inside the vehicle.*

  Keep hands and scrapers clear of the windshield when the wiper lever is in the AUTO position and the ignition is switched ON as fingers could be pinched or the wipers and wiper blades damaged when the wipers activate automatically.
  If you are going to clean the windshield, be sure the wipers are turned off completely—this is particularly important when clearing ice and snow—when it is most likely that the engine is left running.
- *Do not spray water in the engine compartment. Otherwise, it could result in engine-starting problems or damage to electrical parts.*

To help protect the finish from rust and deterioration, wash your Mazda thoroughly and frequently, at least once a month, with lukewarm or cold water.

If the vehicle is washed improperly, the paint surface could be scratched. Here are some examples of how scratching could occur.

Scratches occur on the paint surface when:

- The vehicle is washed without first rinsing off dirt and other foreign matter.
- The vehicle is washed with a rough, dry, or dirty cloth.
- The vehicle is washed at a car wash that uses brushes that are dirty or too stiff.
- Cleansers or wax containing abrasives are used.

NOTE

- *Mazda is not responsible for scratches caused by automatic car washes or improper washing.*
- *Scratches are more noticeable on vehicles with darker paint finishes.*

To minimize scratches on the vehicle's paint finish:

- Rinse off any dirt or other foreign matter using lukewarm or cold water before washing.
- Use plenty of lukewarm or cold water and a soft cloth when washing the vehicle. Do not use a nylon cloth.
- Rub gently when washing or drying the vehicle.
- Take your vehicle only to a car wash that keeps its brushes well maintained.
- Do not use abrasive cleansers or wax that contain abrasives.

⚠ CAUTION

- *Do not use steel wool, abrasive cleaners, or strong detergents containing highly alkaline or caustic agents on chrome-plated or anodized aluminum parts. This may damage the protective coating; also, cleaners and detergents may discolor or deteriorate the paint.*
- *To prevent damaging the antenna, remove it before entering a car wash facility or passing beneath a low overhead clearance.*

Pay special attention to removing salt, dirt, mud, and other foreign material from the underside of the fenders, and make sure the drain holes in the lower edges of the doors and rocker panels are clean.

Insects, tar, tree sap, bird droppings, industrial fallout, and similar deposits can damage the finish if not removed immediately. When prompt washing with plain water is ineffective, use a mild soap made for use on vehicles.

Thoroughly rinse off all soap with lukewarm or cold water. Do not allow soap to dry on the finish.

After washing the vehicle, dry it with a clean chamois to prevent water spots from forming.

⚠ WARNING

Dry off brakes that have become wet by driving slowly, releasing the accelerator pedal and lightly applying the brakes several times until the brake performance returns to normal:

Driving with wet brakes is dangerous. Increased stopping distance or the vehicle pulling to one side when braking could result in a serious accident. Light braking will indicate whether the brakes have been affected.

When using a high water pressure car wash

High water temperature and high water pressure car washers are available depending on the type of car wash machine. If the car washer nozzle is put too close to the vehicle, the force of the spray could damage or deform the molding, affect the sealability of parts, and allow water to penetrate the interior. Keep a sufficient space (30 cm or more) between the nozzle and the vehicle. In addition, do not spend too much time spraying the same area of the vehicle, and be very careful when spraying between gaps in doors and around windows.

Waxing

Your vehicle needs to be waxed when water no longer beads on the finish. Always wash and dry the vehicle before waxing it. In addition to the vehicle body, wax the metal trim to maintain its luster.

1. Use wax which contains no abrasives. Waxes containing abrasive will remove paint and could damage bright metal parts.

2. Use a good grade of natural wax for metallic, mica, and solid colors.
3. When waxing, coat evenly with the sponge supplied or a soft cloth.
4. Wipe off the wax with a soft cloth.

NOTE
A spot remover to remove oil, tar, and similar materials will usually also take off the wax. Rewax these areas even if the rest of the vehicle does not need it.

▼Repairing Damage to the Finish

Deep scratches or chips on the finish should be repaired promptly. Exposed metal quickly rusts and can lead to major repairs.

⚠ CAUTION

If your Mazda is damaged and needs metal parts repaired or replaced, make sure the body shop applies anti-corrosion materials to all parts, both repaired and new. This will prevent them from rusting.

▼Bright-Metal Maintenance

- Use tar remover to remove road tar and insects. Never do this with a knife or similar tool.
- To prevent corrosion on bright-metal surfaces, apply wax or chrome preservative and rub it to a high luster.
- During cold weather or in coastal areas, cover bright-metal parts with a coating of wax or preservative heavier than usual. It would also help to coat them with noncorrosive petroleum jelly or some other protective compound.

⚠ CAUTION

Don't use steel wool, abrasive cleaners, or strong detergents containing highly alkaline or caustic agents on chrome-plated or anodized aluminum parts. This may result in damage to the protective coating and cause discoloration or paint deterioration.

▼Underbody Maintenance

Road chemicals and salt used for ice and snow removal and solvents used for dust control may collect on the underbody. If not removed, they will speed up rusting and deterioration of such underbody parts as fuel lines, frame, floor pan, and exhaust system, even though these parts may be coated with anti-corrosive material.

Thoroughly flush the underbody and wheel housings with lukewarm or cold water at the end of each winter. Try also to do this every month.

Pay special attention to these areas because they easily hide mud and dirt. **It will do more harm than good to wet down the road grime without removing it.**

The lower edges of doors, rocker panels, and frame members have drain holes that should not be clogged. Water trapped there will cause rusting.

⚠ WARNING

Dry wet brakes by driving very slowly and applying the brakes lightly until brake performance is normal:

Driving with wet brakes is dangerous. Increased stopping distance or the vehicle pulling to one side when braking could result in a serious accident. Light braking will indicate whether the brakes have been affected.

▼Aluminum Wheel Maintenance

A protective coating is provided over the aluminum wheels. Special care is needed to protect this coating.

⚠ CAUTION

Do not use any detergent other than mild detergent. Before using any detergent, verify the ingredients. Otherwise, the product could discolor or stain the aluminum wheels.

NOTE

- *Do not use a wire brush or any abrasive cleaner, polishing compound, or solvent on aluminum wheels. They may damage the coating.*
- *Always use a sponge or soft cloth to clean the wheels.*
  Rinse the wheels thoroughly with lukewarm or cold water. Also, be sure to clean the wheels after driving on dusty or salted roads to help prevent corrosion.
- *Avoid washing your vehicle in an automatic car wash that uses high-speed or hard brushes.*
- *If your aluminum wheels lose luster, wax the wheels.*

(With Tire Pressure Monitoring System)
Check special requirements for Tire Pressure Monitoring System.
Refer to Tires and Wheels on page 5-32.

▼Plastic Part Maintenance

- When cleaning the plastic lenses of the lights, do not use gasoline, kerosene, rectified spirit, paint, thinner, highly acidic detergents, or strongly alkaline detergents. Otherwise, these chemical agents can discolor or damage the surfaces resulting in a significant loss in functionality. If plastic parts become inadvertently exposed to any of these chemical agents, flush with water immediately.
- If plastic parts such as the bumpers become inadvertently exposed to chemical agents or fluids such as gasoline, oil, engine coolant, or battery fluid, it could cause discoloration, staining, or paint peeling. Wipe off any such chemical agents or fluids using a soft cloth immediately.

- High water temperature and high water pressure car washers are available depending on the type of high pressure car washer device. If the car washer nozzle is put too close to the vehicle or aimed at one area for an extended period of time, it could deform plastic parts or damage the paint.
- Do not use wax containing compounds (polish). Otherwise, it could result in paint damage.
- In addition, do not use an electrical or air tool to apply wax. Otherwise, the frictional heat generated could result in deformation of plastic parts or paint damage.

Interior Care

WARNING

Do not spray water in the cabin:
Splashing water on electrical parts such as the audio unit and switches is dangerous as it could cause a malfunction or a fire.

▼Dashboard Precautions

Prevent caustic solutions such as perfume and cosmetic oils from contacting the dashboard. They'll damage and discolor the dashboard. If these solutions get on the dashboard, wipe them off immediately.

CAUTION

Do not use glazing agents.
Glazing agents contain ingredients which may cause discoloration, wrinkling, cracks and peeling.

▼Cleaning the Upholstery and Interior Trim

Vinyl

Remove dust and loose dirt from vinyl with a whisk broom or vacuum cleaner. Clean vinyl with a leather-and-vinyl cleaner.

Leather

Remove dust and sand first using a vacuum cleaner or other means, then wipe dirt off using a soft cloth with a leather cleaner or a soft cloth soaked in mild soap.
Wipe off the remaining cleaner or soap using a cloth soaked in clean water and wrung out well.
Remove moisture with a dry, soft cloth and allow the leather to further dry in a well-ventilated, shaded area. If the leather gets wet such as from rain, also remove moisture and dry it as soon as possible.

NOTE

- *Because genuine leather is a natural material, its surface is not uniform and it may have natural scars, scratches, and wrinkles.*
- *To maintain the quality for as long as possible, periodical maintenance, about twice a year, is recommended.*
- *Sand and dust on the seat surface may damage the overcoat of the genuine leather surfaces and accelerate wear.*
- *Greasy soiling on genuine leather may cause molding and stains.*
- *Rubbing hard with a stiff brush or cloth may cause damage.*
- *Do not wipe the leather using alcohol, chlorine bleach, or organic solvents such as thinner, benzene, or gasoline. Otherwise, it may cause discoloration or stains.*
- *If the seats get wet, promptly remove moisture with a dry cloth. Remaining moisture on the surface may cause deterioration such as hardening and shrinkage.*
- *Exposure to direct sunlight for long periods may cause deterioration and shrinkage. When parking the car under direct sunlight for long periods, shade the interior using sunshades.*
- *Do not leave vinyl products on the seats for long periods as they may affect the leather quality and coloring. If the cabin temperature becomes hot, the vinyl may deteriorate and adhere to the genuine leather.*

Fabric

Remove dust and loose dirt from fabric with a whisk broom or vacuum cleaner. Clean it with a mild soap solution good for upholstery and carpets. Remove fresh spots immediately with a fabric spot cleaner.

To keep the fabric looking clean and fresh, take care of it. Otherwise its color will be affected, it can be stained easily, and its fire-resistance may be reduced.

CAUTION

Use only recommended cleaners and procedures. Others may affect appearance and fire-resistance.

Piano black panel *

The following parts are fitted with panels that have been treated with a special coating that resists scratching.
· Center panel
· Steering wheel (partial)
· Door trim panel
When the panel needs to be cleaned, use a soft cloth to wipe off dirt from the surface.

NOTE
Scratches or nicks on the panels resulting from the use of a hard brush or cloth may not be repairable.

▼Cleaning the Lap/Shoulder Belt Webbing

Clean the webbing with a mild soap solution recommended for upholstery or carpets. Follow instructions. Don't bleach or dye the webbing; this may weaken it.

After cleaning the belts, thoroughly dry the belt webbing and make sure there is no remaining moisture before retracting them.

WARNING

Have an Authorized Mazda Dealer replace damaged seat belts immediately:
Using damaged seat belts is dangerous. In a collision, damaged belts cannot provide adequate protection.

▼Cleaning the Window Interiors

If the windows become covered with an oily, greasy, or waxy film, clean them with glass cleaner. Follow the directions on the container.

CAUTION

- *Do not scrape or scratch the inside of the window glass. It could damage the thermal filaments and the antenna lines.*
- *When washing the inside of the window glass, use a soft cloth dampened in lukewarm water, gently wiping the thermal filaments and the antenna lines. Use of glass cleaning products could damage the thermal filaments and the antenna lines.*

*Some models.

▼Cleaning the Floor Mats

Rubber floor mats should be cleaned with mild soap and water only.

⚠ WARNING

Do not use rubber cleaners, such as tire cleaner or tire shine, when cleaning rubber floor mats:

Cleaning the rubber floor mats with rubber cleaning products makes the floor mats slippery.
This may cause an accident when depressing the accelerator or brake pedal or when getting in or out of the vehicle.

After removing the floor mats for cleaning, always reinstall them securely.Refer to Floor Mat on page 4-9.

9 Customer Information and Reporting Safety Defects

Important consumer information including warranties and add-on equipment.

Customer Assistance 9-2
Customer Assistance (U.S.A.) 9-2
Customer Assistance (Canada) 9-7
Customer Assistance (Puerto Rico) ... 9-10
Customer Assistance (Mexico) 9-11

Mazda Importer/Distributors 9-13
Importer/Distributor 9-13
Distributor in Each Area 9-13

Warranty 9-15
Warranties for Your Mazda 9-15
Outside the United States and Canada 9-16
Outside the United States 9-17
Outside Canada 9-18
Registering Your Vehicle in A Foreign Country (Except United States and Canada) 9-19
Add-On Non-Genuine Parts and Accessories 9-20

Cell Phones 9-21
Cell Phones Warning 9-21

Event Data Recorder 9-22
Event Data Recorder 9-22

Uniform Tire Quality Grading System (UTQGS) 9-23
Uniform Tire Quality Grading System (UTQGS) 9-23

Tire Information (except Canada) 9-25
Tire Labeling 9-25
Location of the Tire Label (Placard) 9-31
Tire Maintenance 9-34
Vehicle Loading 9-37
Steps for Determining the Correct Load Limit 9-44

Reporting Safety Defects 9-45
Reporting Safety Defects (U.S.A.) 9-45
Reporting Safety Defects (Canada) ... 9-46

Service Publications 9-47
Service Publications 9-47

Customer Assistance (U.S.A.)

Your complete and permanent satisfaction is our business. We are here to serve you. All Authorized Mazda Dealers have the knowledge and the tools to keep your Mazda vehicle in top condition.
If you have any questions or recommendations for improvement regarding the service of your Mazda vehicle or servicing by Mazda Dealer personnel, we recommend that you take the following steps:

NOTE
If it becomes necessary to have the components or wiring system for the supplementary restraint system modified to accommodate a person with certain medical conditions in accordance with a certified physician, contact an Authorized Mazda Dealer.

▼STEP 1: Contact Your Mazda Dealer

Discuss the matter with an Authorized Mazda Dealer. This is the quickest and best way to address the issue.

- If your concern has not been resolved by the CUSTOMER RELATIONS, SALES, SERVICE, or PARTS MANAGER, then please contact the GENERAL MANAGER of the dealership or the OWNER.
- If it becomes necessary to have the components or wiring system for the supplementary restraint system modified to accommodate a person with certain medical conditions in accordance with a certified physician, go to STEP 2.

▼STEP 2: Contact Mazda North American Operations

If for any reason you feel the need for further assistance after contacting your dealership management or it becomes necessary to have the components or wiring system for the supplementary restraint system modified to accommodate a person with certain medical conditions in accordance with a certified physician, you can reach Mazda North American Operations by one of the following ways.

Log on: at www.mazdaUSA.com

Answers to many questions, including how to locate or contact a local Mazda dealership in the U.S., can be found here.

E-mail: click on “Contact Us” located on the “Inside Mazda” tab, or at the bottom of the page at www.mazdaUSA.com

By phone at: 1 (800) 222-5500

By letter at:
Attn: Customer Assistance
Mazda North American Operations
7755 Irvine Center Drive
Irvine, CA 92618-2922
P.O. Box 19734
Irvine, CA 92623-9734

In order to serve you efficiently and effectively, please help us by providing the following information:

1. Your name, address, and telephone number
2. Year and model of vehicle
3. Vehicle Identification Number (17 digits, noted on your registration or title or located on the upper driver's side corner of the dash)
4. Purchase date and current mileage
5. Your dealer's name and location
6. Your question(s)

If you live outside the U.S.A., please contact your nearest Mazda Distributor.

▼STEP 3: Contact Better Business Bureau (BBB)

Mazda North American Operations realizes that mutual agreement on some issues may not be possible. As a final step to ensure that your concerns are being fairly considered, Mazda North American Operations has agreed to participate in a dispute settlement program administered by the Better Business Bureau (BBB) system, at no cost to you the consumer.

BBB AUTO LINE works with consumers and the manufacturer in an attempt to reach a mutually acceptable resolution of any warranty related concerns. If the BBB is not able to facilitate a settlement they will provide an informal hearing before an arbitrator.

You are required to resort to BBB AUTO LINE before exercising rights or seeking remedies under the Federal Magnuson-Moss Warranty Act, 15 U.S.C. § 2301 et seq. To the extent permitted by the applicable state “Lemon Law”, you are also required to resort to BBB AUTO LINE before exercising any rights or seeking remedies under the “Lemon Law”. If you choose to seek remedies that are not created by the Magnuson-Moss Warranty Act or the applicable state “Lemon Law”, you are not required to first use BBB AUTO LINE.

The whole process normally takes 40 days or less. The arbitration decision is not binding on you or Mazda unless you accept the decision. For more information about BBB AUTO LINE, including current eligibility standards, please call 1-800-955-5100 or visit the BBB website at www.lemonlaw.bbb.org.

Being truly committed to customer satisfaction is more than a phrase with Mazda. We hope to satisfy every customer directly, but if there is ever a question about our decision, Mazda believes in providing a fast, fair and free method such as the BBB AUTO LINE to ensure Mazda delivers on our commitment to do the right thing for our customers!

▼California Customers

1. Mazda North American Operations participates in BBB AUTO LINE, a mediation/arbitration program administered by the Council of Better Business Bureaus [4200 Wilson Boulevard, Arlington, Virginia 22203] through local Better Business Bureaus. BBB AUTO LINE and Mazda have been certified by the Arbitration Certification Program of the California Department of Consumer Affairs.
2. If you have a problem arising under a Mazda written warranty, we encourage you to bring it to our attention. If we are unable to resolve it, you may file a claim with BBB AUTO LINE. Claims must be filed with BBB AUTO LINE within six (6) months after the expiration of the warranty.
3. To file a claim with BBB AUTO LINE, call 1-800-955-5100. There is no charge for the call.
4. In order to file a claim with BBB AUTO LINE, you will have to provide your name and address, the brand name and vehicle identification number (VIN) of your vehicle, and a statement of the nature of your problem or complaint. You will also be asked to provide: the approximate date of your acquisition of the vehicle, the vehicle's current mileage, the approximate date and mileage at the time any problem(s) were first brought to the attention of Mazda or one of our dealers, and a statement of the relief you are seeking.
5. BBB AUTO LINE staff may try to help resolve your dispute through mediation. If mediation is not successful, or if you do not wish to participate in mediation, claims within the program's jurisdiction may be presented to an arbitrator at an informal hearing. The arbitrator's decision should ordinarily be issued within 40 days from the time your complaint is filed; there may be a delay of 7 days if you did not first contact Mazda about your problem, or a delay of up to 30 days if the arbitrator requests an inspection/report by an impartial technical expert or further investigation and report by BBB AUTO LINE.

6. You are required to use BBB AUTO LINE before asserting in court any rights or remedies conferred by California Civil Code Section 1793.22. You are also required to use BBB AUTO LINE before exercising rights or seeking remedies created by Title I of the Magnuson-Moss Warranty Act, 15 U.S.C. sec. 2301 et seq. If you choose to seek redress by pursuing rights and remedies not created by California Civil Code Section 1793.22 or Title I of the Magnuson-Moss Warranty Act, resort to BBB AUTO LINE is not required by those statutes.

7. California Civil Code Section 1793.2 (d) requires that, if Mazda or its representative is unable to repair a new motor vehicle to conform to the vehicle's applicable express warranty after a reasonable number of attempts, Mazda may be required to replace or repurchase the vehicle. California Civil Code Section 1793.22 (b) creates a presumption that Mazda has had a reasonable number of attempts to conform the vehicle to its applicable express warranties if, within 18 months from delivery to the buyer or 18,000 miles on the vehicle's odometer, whichever occurs first, one or more of the following occurs:
   - The same nonconformity [a failure to conform to the written warranty that substantially impairs the use, value or safety of the vehicle] results in a condition that is likely to cause death or serious bodily injury if the vehicle is driven **AND** the nonconformity has been subject to repair two or more times by Mazda or its agents **AND** the buyer or lessee has directly notified Mazda of the need for the repair of the nonconformity; OR
   - The same nonconformity has been subject to repair 4 or more times by Mazda or its agents **AND** the buyer has notified Mazda of the need for the repair of the nonconformity; OR
   - The vehicle is out of service by reason of repair of nonconformities by Mazda or its agents for a cumulative total of more than 30 calendar days after delivery of the vehicle to the buyer.

   NOTICE TO Mazda AS REQUIRED ABOVE SHALL BE SENT TO THE FOLLOWING ADDRESS:
   Mazda North American Operations
   7755 Irvine Center Drive
   Irvine, CA 92618
   ATTN: Customer Mediation

8. The following remedies may be sought in BBB AUTO LINE: repairs, reimbursement for money paid to repair a vehicle or other expenses incurred as result of a vehicle nonconformity, repurchase or replacement of your vehicle, and compensation for damages and remedies available under Mazda's written warranty or applicable law.

9. The following remedies may **not** be sought in BBB AUTO LINE: punitive or multiple damages, attorneys' fees, or consequential damages other than as provided in California Civil Code Section 1794 (a) and (b).

10. You may reject the decision issued by a BBB AUTO LINE arbitrator. If you reject the decision, you will be free to pursue further legal action. The arbitrator's decision and any findings will be admissible in a court action.
11. If you accept the arbitrator's decision, Mazda will be bound by the decision, and will comply with the decision within a reasonable time not to exceed 30 days after we receive notice of your acceptance of the decision.
12. Please call BBB AUTO LINE at 1-800-955-5100 for further details about the program.

Customer Assistance (Canada)

▼Satisfaction Review Process

Your complete and permanent satisfaction is of primary concern to Mazda. All Authorized Mazda Dealers have both the knowledge and tools to keep your Mazda in top condition. In our experience, any questions, problems, or complaints regarding the operation of your Mazda or any other general service transactions are most effectively resolved by your dealer. If the cause of your dissatisfaction cannot adequately be addressed by normal dealership procedures, we recommend that you take the following steps:

▼STEP 1: Contact the Mazda Dealer

Discuss the matter with a member of dealership management. If the Service Manager has already reviewed your concerns, contact the owner of the dealership or its General Manager.

▼STEP 2: Contact the Mazda Regional Office

If you feel that you still require assistance, ask the dealer Service Manager to arrange for you to meet the local Mazda Service Representative. If more expedient, contact Mazda Canada Inc.Regional Office nearest you for such arrangements. Regional Office address and phone numbers are shown (page 9-9).

▼STEP 3: Contact the Mazda Customer Relations Department

If still not substantially satisfied, contact the Customer Relations Department, Mazda Canada Inc., 55 Vogell Road, Richmond Hill, Ontario, L4B 3K5 Canada TEL: 1 (800) 263-4680.
Provide the Department with the following information:

1. Your name, address and telephone number
2. Year and model of vehicle
3. Vehicle Identification Number (VIN). Refer to the “Vehicle Identification Labels” page of section 10 of this manual for the location of the VIN.
4. Purchase date
5. Present odometer reading
6. Your dealer's name and location
7. The nature of your problem and/or cause of dissatisfaction

The Department, in cooperation with the local Mazda Service Representative, will review the case to determine if everything possible has been done to ensure your satisfaction.

Customer Assistance

Please recognize that the resolution of service problems in most cases requires the use of your Mazda dealer's service facilities, personnel and equipment. We urge you to follow the above three steps in sequence for most effective results.

▼Mediation/Arbitration Program

Occasionally a customer concern cannot be resolved through Mazda's Customer Satisfaction Program. If after exhausting the procedures in this manual your concern is still not resolved, you have another option.

Mazda Canada Inc. participates in an arbitration program administered by the Canadian Motor Vehicle Arbitration Plan (CAMVAP). CAMVAP will advise you about how your concern may be reviewed and resolved by an independent third party through binding arbitration.

Your complete satisfaction is the goal of Mazda Canada Inc. and our dealers. Mazda's participation in CAMVAP makes a valuable contribution to our achieving that goal. There is no charge for using CAMVAP. CAMVAP results are fast, fair and final as the award is binding on both you and Mazda Canada Inc.

▼Canadian Motor Vehicle Arbitration Plan (CAMVAP)

If a specific item of concern arises, where a solution cannot be reached between an owner, Mazda, and/or one of its dealers (that all parties cannot agree upon), the owner may wish to use the services offered by the Canadian Motor Vehicle Arbitration Plan (CAMVAP).

CAMVAP uses the services of Provincial Administrators to assist consumers in scheduling and preparing for their arbitration hearings. However, before you can proceed with CAMVAP you must follow your Mazda dispute resolution process as outlined previously.

CAMVAP is fully implemented in all provinces and territories.
Consumers wishing to obtain further information about the Program should contact the Provincial Administrator at 1 (800) 207-0685, or by contacting the Canadian Motor Vehicle Arbitration Plan Office at:

Canadian Motor Vehicle Arbitration Plan
235 Yorkland Boulevard, suite 300
North York, Ontario
M2J 4Y8
http://camvap.ca

Provincial Administrators may be reached locally as listed below:

Province/Territory	CAMVAP Number
British Columbia & Yukon Territories	1 (800) 207-0685
Alberta & Northwest Territories	1 (800) 207-0685
Saskatchewan	1 (800) 207-0685
Manitoba	1 (800) 207-0685
Ontario	1 (800) 207-0685
Atlantic Canada	1 (800) 207-0685
Quebec	1 (800) 207-0685

▼Regional Offices

REGIONAL OFFICES	AREAS COVERED
MAZDA CANADA INC. WESTERN REGION 8171 ACKROYD ROAD SUITE 2000 RICHMOND B.C. V6X 3K1 (604) 303-5670	ALBERTA, BRITISH COLUMBIA, MANITOBA, SASKATCHEWAN, YUKON
MAZDA CANADA INC. CENTRAL/ATLANTIC REGION 55 VOGELL ROAD, RICHMOND HILL, ONTARIO, L4B 3K5 (905) 787-7000	ONTARIO
MAZDA CANADA INC. QUEBEC REGION 6111 ROUTE TRANS CANADIENNE POINTE CLAIRE, QUEBEC H9R 5A5 (514) 694-6390	QUEBEC, NEW BRUNSWICK, NOVA SCOTIA, PRINCE EDWARD ISLAND, NEWFOUNDLAND

Customer Assistance (Puerto Rico)

Your complete and permanent satisfaction is our business. That is why all Authorized Mazda Dealers have the knowledge and the tools to keep your Mazda vehicle in top condition.
If you have any questions or recommendations for improvement regarding the service of your Mazda vehicle or servicing by Mazda Dealer personnel, we recommend that you take the following steps:

▼STEP 1

Discuss the matter with an Authorized Mazda Dealer. This is the quickest and best way to address the issue. If your concern has not been resolved by the CUSTOMER RELATIONS, SALES, SERVICE, or PARTS MANAGER, then please contact the GENERAL MANAGER of the dealership or the OWNER.

▼STEP 2

If, after following STEP 1, you feel the need for further assistance, please contact your area's Mazda representative (Indicated on the next page).

Please help us by providing the following information:

1. Your name, address, and telephone number
2. Year and model of vehicle
3. Vehicle Identification Number (17 digits, noted on your registration or title or located on the upper driver's side corner of the dash)
4. Purchase date and current mileage
5. Your dealer's name and location
6. Your question(s)

Customer Assistance (Mexico)

Your complete and permanent satisfaction is our business. We are here to serve you. All Authorized Mazda Dealers have the knowledge and the tools to keep your Mazda vehicle in top condition.
If you have any questions or recommendations for improvement regarding the service of your Mazda vehicle or servicing by Mazda Dealer personnel, we recommend that you take the following steps:

▼Contact Your Mazda Dealer

Discuss the matter with an Authorized Mazda Dealer. This is the quickest and best way to address the issue.

- If your concern has not been resolved by the CUSTOMER RELATIONS, SALES, SERVICE, or PARTS MANAGER, then please contact the GENERAL MANAGER of the dealership or the OWNER.
- If it becomes necessary to have the components or wiring system for the supplementary restraint system modified to accommodate a person with certain medical condition in accordance with a certified physician you must contact your dealership in order to avoid the potential loss of the warranty of your vehicle which may occur if some third party is hired by the customer to make any modifications to this system.

Log on: at www.MazdaMexico.com.mx

Answers to many questions, including how to locate or contact a local Mazda dealership in Mexico, can be found here.

E-mail: click on “Contactanos” at the top of the page at www.MazdaMexico.com.mx

By phone at: 01 800 01 MAZDA (62932)

By letter at:
Attn: Customer Assistance
Mazda Motor de Mexico
Mario Pani #150, PB Col. Lomas de Santa Fe
Mexico, D.F. C.P. 05300
Del. Cuajimalpa de Morelos
Tel: Customer Assistance
01 800 01 MAZDA (62932).

In order to serve you efficiently and effectively, please help us by providing the following information:

1. Your name, address, and telephone number

Customer Assistance

2. Year and model of vehicle
3. Vehicle Identification Number (17 digits, noted on your registration or title or located on the upper driver's side corner of the dash)
4. Purchase date and current mileage
5. Your dealer's name and location
6. Your question(s)

Importer/Distributor

▼U.S.A.

Mazda North American Operations
7755 Irvine Center Drive
Irvine, CA 92618-2922 U.S.A.
P.O. Box 19734
Irvine, CA 92623-9734 U.S.A.
TEL: 1 (800) 222-5500 (in U.S.A.)
(949) 727-1990 (outside U.S.A.)

Distributor in Each Area

▼CANADA

Mazda Canada Inc.
55 Vogell Road, Richmond Hill,
Ontario, L4B 3K5 Canada
TEL: 1 (800) 263-4680 (in Canada)
(905) 787-7000 (outside Canada)

▼PUERTO RICO/U.S. Virgin Island

Plaza Motors Corp. (Mazda de Puerto Rico)
P.O. Box 362722, San Juan, Puerto Rico
00936-2722
TEL: (787) 641-9300

▼MEXICO

Mazda Motor de Mexico
Mario Pani # 150, PB Col. Lomas de
Santa Fe Mexico, D.F. C.P. 05300 Del.
Cuajimalpa
TEL: Center of Attention to Clients:
01 (800) 016 2932. in Mexico

▼GUAM

Triple J Motors
157 South Marine Drive, Tamuning,
GUAM 96911 USA
P.O. Box 6066 Tamuning, Guam 96931
TEL: (671) 649-6555

▼SAIPAN

Pacific International Marianas, Inc.
(d.b.a. Midway Motors)
P.O. Box 887 Saipan, MP 96950
TEL: (670) 234-7524

Mazda Importer/Distributors

Triple J Saipan, Inc.
(d.b.a. Triple J Motors)
P.O. Box 500487 Saipan, MP 96950-0487
TEL: (670) 234-7133/3051

Warranties for Your Mazda

- New Vehicle Limited Warranty
- Powertrain Limited Warranty
- Safety Restraint System Limited Warranty
- Anti-perforation Limited Warranty
- Federal Emission Control Warranty/California Emission Control Warranty
  - Emission Defect Warranty
  - Emission Performance Warranty
- Emission Control Warranty
- Replacement Parts and Accessories Limited Warranty
- Tire Warranty

NOTE

Warranty information varies depending on the country. Refer to the Warranty Booklet for detailed warranty information.

Outside the United States and Canada

Government regulations in the United States and Canada require that automobiles meet specific emission regulations and safety standards. Therefore, vehicles built for use in the United States, its territories, and Canada may differ from those sold in other countries.

The differences may make it difficult or even impossible for your vehicle to receive satisfactory servicing in other countries. We strongly recommend that you NOT take your Mazda outside these areas.
You may have these problems if you do:

- Recommended fuel may be unavailable. Any kind of leaded fuel or low-octane fuel will affect vehicle performance and damage the emission controls and engine.
- Proper repair facilities, tools, testing equipment, and replacement parts may not be available.

The Mazda warranty applies only to Mazda vehicles registered and normally operated in the United States, its territories, and Canada.

Outside the United States

Government regulations in the United States require that automobiles meet specific emission regulations and safety standards. Therefore, vehicles built for use in the United States may differ from those sold in other countries.

The differences may make it difficult or even impossible for your vehicle to receive satisfactory servicing in other countries. We strongly recommend that you NOT take your Mazda outside the United States. However, in the event that you are moving to Canada permanently, Mazda vehicles built for use in the United States could be eligible for exportation to Canada with specific vehicle modifications to comply with the Canadian Motor Vehicle Safety Standards (CMVSS).

NOTE
The above is applicable for a permanent import/export situation and not related to travelers on vacation.

You may have the following problems if you do take your vehicle outside of the United States:
- Recommended fuel may be unavailable. Any kind of leaded fuel or low-octane fuel will affect vehicle performance and damage the emission controls and engine.
- Proper repair facilities, tools, testing equipment, and replacement parts may not be available.

Please refer to your Manufacturer's Warranty Booklet for more information.

Outside Canada

Government regulations in Canada require that automobiles meet specific emission regulations and safety regulations. Therefore, vehicles built for use in Canada may differ from those sold in other countries.

The differences may make it difficult or even impossible for your vehicle to receive satisfactory servicing in other countries. We strongly recommend that you NOT take your Mazda outside Canada. However, in the event that you are moving to the United States permanently, Mazda vehicles built for use in Canada could be eligible for exportation to the United States with specific vehicle modifications to comply with the United States Federal Motor Vehicle Safety Standards (FMVSS).

NOTE
The above is applicable for a permanent import/export situation and not related to travelers on vacation.

You may have the following problems if you do take your vehicle outside of Canada:
- Recommended fuel may be unavailable. Any kind of leaded fuel or low-octane fuel will affect vehicle performance and damage the emission controls and engine.
- Proper repair facilities, tools, testing equipment, and replacement parts may not be available.

Please refer to your Manufacturer's Warranty Booklet for more information.

Registering Your Vehicle in A Foreign Country (Except United States and Canada)

Registering your vehicle in a foreign country may be problematic depending on whether it meets the specific emission and safety standards of the country in which the vehicle will be driven. Consequently, your vehicle may require modifications at personal expense in order to meet the regulations.
In addition, you should be aware of the following issues:
Satisfactory vehicle servicing may be difficult or impossible in another country.

The fuel specified for your vehicle may be unavailable.

Parts, servicing techniques, and tools necessary to maintain and repair your vehicle may be unavailable.

There might not be an Authorized Mazda Dealer in the country you plan to take your vehicle.

The Mazda warranty is valid only in certain countries.

Add-On Non-Genuine Parts and Accessories

Non-genuine parts and accessories for Mazda vehicles can be found in stores.
These may fit your vehicle, but they are not approved by Mazda for use with Mazda vehicles. When you install non-genuine parts or accessories, they could affect your vehicle's performance or safety systems; the Mazda warranty doesn't cover this. Before you install any non-genuine parts or accessories, consult an Authorized Mazda Dealer.

⚠ WARNING

Always consult an Authorized Mazda Dealer before you install non-genuine parts or accessories:

Installation of non-genuine parts or accessories is dangerous. Improperly designed parts or accessories could seriously affect your vehicle's performance or safety systems. This could cause you to have an accident or increase your chances of injuries in an accident.

Be very careful in choosing and installing add-on electrical equipment, such as mobile telephones, two-way radios, stereo systems, and car alarm systems:

Incorrectly choosing or installing improper add-on equipment or choosing an improper installer is dangerous. Essential systems could be damaged, causing engine stalling, air-bag (SRS) activation, ABS/TCS/DSC inactivation, or a fire in the vehicle.

Mazda assumes no responsibility for death, injury, or expenses that may result from the installation of add-on non-genuine parts or accessories.

Cell Phones Warning

WARNING

Please comply with the legal regulations concerning the use of communication equipment in vehicles in your State or Province:

Use of any electrical devices such as cell phones, computers, portable radios, vehicle navigation or other devices by the driver while the vehicle is moving is dangerous. Dialing a number on a cell phone while driving also ties-up the driver's hands. Use of these devices will cause the driver to be distracted and could lead to a serious accident. If a passenger is unable to use the device, pull off the right-of-way to a safe area before use. If use of a cell phone is necessary despite this warning, use a hands-free system to at least leave the hands free to drive the vehicle. Never use a cell phone or other electrical devices while the vehicle is moving and, instead, concentrate on the full-time job of driving.

Event Data Recorder

This vehicle is equipped with an event data recorder (EDR). The main purpose of an EDR is to record, in certain crash or near crash-like situations, such as an air bag deployment or hitting a road obstacle, data that will assist in understanding how a vehicle's systems performed. The EDR is designed to record data related to vehicle dynamics and safety systems for a short period of time, typically 30 seconds or less. The EDR in this vehicle is designed to record such data as:
· How various systems in your vehicle were operating;
· Whether or not the driver and passenger safety belts were buckled/fastened;
· How far (if at all) the driver was depressing the accelerator and/or brake pedal; and,
· How fast the vehicle was traveling.
These data can help provide a better understanding of the circumstances in which crashes and injuries occur.
NOTE:
EDR data are recorded by your vehicle only if a non-trivial crash or near crash-like situation occurs; no data are recorded by the EDR under normal driving conditions and no personal data (e.g., name, gender, age, and crash location) are recorded. However, other parties, such as law enforcement, could combine the EDR data with the type of personally identifying data routinely acquired during a crash investigation.
To read data recorded by an EDR, special equipment is required, and access to the vehicle or the EDR is needed. In addition to the vehicle manufacturer, other parties, such as law enforcement, that have the special equipment, can read the information if they have access to the vehicle or the EDR.

Mazda will not disclose any of the data recorded in an EDR to a third party unless:
- A written agreement from the vehicle owner or the lessee is obtained
- Officially requested by the police or other law enforcement authorities
- Used as a defense for Mazda in a law suit, claim, or arbitration
- Ordered by a judge or court

However, if necessary Mazda will:
- Use the data for research on Mazda vehicle performance, including safety.
- Disclose the data or the summarized data to a third party for research purposes without disclosing vehicle or owner identification information.

Uniform Tire Quality Grading System (UTQGS)

This information relates to the tire grading system developed by the U.S. National Highway Traffic Safety Administration for grading tires by tread wear, traction, and temperature performance.

▼Tread Wear

The tread wear grade is a comparative rating based on the wear rate of the tire when tested under controlled conditions on a specified government test course.
For example, a tire graded 150 would wear one-and-a-half times as well on the government course as a tire graded 100.

The relative performance of tires depends upon the actual conditions of their use, however, and may depart significantly from the norm because of variations in driving habits, service practices and differences in road characteristics and climate.

▼Traction-AA, A, B, C

The traction grades, from highest to lowest, are AA, A, B, and C. These grades represent the tire's ability to stop on wet pavement as measured under controlled conditions on specified government test surfaces of asphalt and concrete. A tire marked C may have poor traction performance.

⚠ WARNING

The traction grade assigned to this tire is based on braking (straight ahead) traction tests and does not include acceleration cornering (turning), hydroplaning, or peak traction characteristics.

▼Temperature-A, B, C

The temperature grades A (the highest), B, and C, represent the tire's resistance to the generation of heat and its ability to dissipate heat when tested under controlled conditions on a specified indoor laboratory test wheel.
Sustained high temperature can cause the material of the tire to degenerate and reduce tire life, and excessive temperatures can lead to sudden tire failure.

Grade C corresponds to a level of performance which all passenger vehicle tires must meet under the Federal Motor Vehicle Safety Standard No. 109. Grades B and A represent higher levels of performance on the laboratory test wheel than the minimum required by law.

Uniform Tire Quality Grading System (UTQGS)

⚠ WARNING

Keep your vehicle's tires properly inflated and not overloaded:

Driving with improperly inflated or overloaded tires is dangerous. Excessive speed, underinflation, or excessive loading, either separately or in combination, can cause heat buildup and possible tire failure. The temperature grade for this tire is established for a tire that is properly inflated and not overloaded.

These grades will be added to the sidewalls of passenger vehicle tires over the next several years according to a schedule established by the NHTSA and the tire manufacturers.

The grade of tires available as standard or optional equipment on Mazda vehicles may vary with respect to grade.

ALL PASSENGER VEHICLE TIRES MUST CONFORM TO THESE GRADES AND TO ALL OTHER FEDERAL TIRE-SAFETY REQUIREMENTS.

▼UNIFORM TIRE QUALITY GRADING

Quality grades can be found where applicable on the tire sidewall between tread shoulder and maximum section width.
For example:
TREADWEAR 200 TRACTION AA TEMPERATURE A

UTQGS MARK (example)

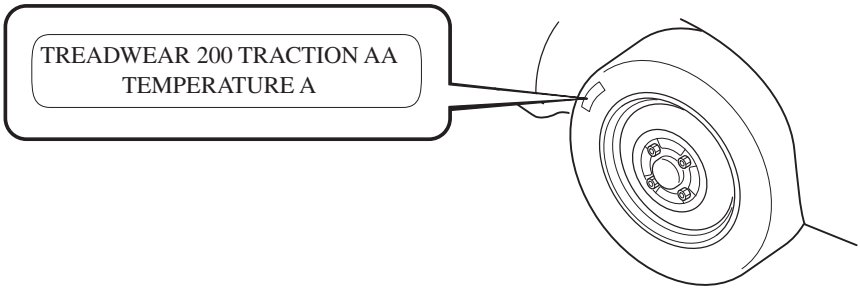

Tire Labeling

Federal law requires tire manufacturers to place standardized information on the sidewall of all tires. This information identifies and describes the fundamental characteristics of the tire and also provides a tire identification number for safety standard certification and in case of a recall.

▼Information on Passenger Vehicle Tires

Please refer to the sample below.

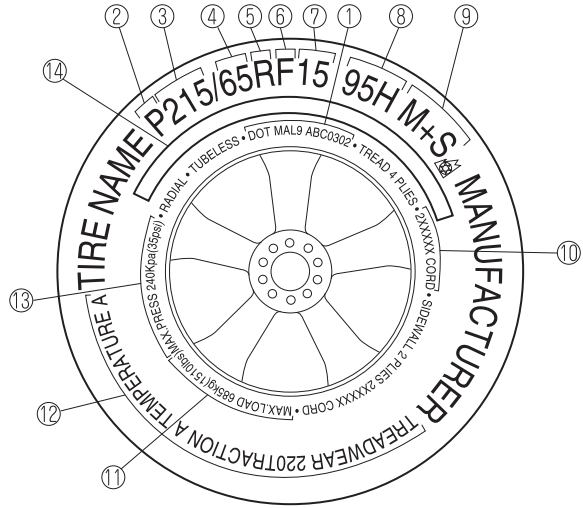

1. TIN: U.S. DOT tire identification number
2. Passenger car tire
3. Nominal width of tire in millimeters
4. Ratio of height to width (aspect ratio)
5. Radial
6. Run-flat tire
7. Rim diameter code
8. Load index & speed symbol
9. Severe snow conditions
10. Tire ply composition and materials used

Tire Information (except Canada)

11. Max. load rating
12. Tread wear, traction and temperature grades
13. Max. permissible inflation pressure
14. SAFETY WARNING

P215/65R15 95H is an example of a tire size and load index rating. Here is an explanation of the various components of that tire size and load index rating. Note that the tire size and load index rating may be different from the example.

P

Indicates a tire that may be installed on cars, SUVs, minivans and light trucks as designated by the Tire and Rim Association (T&RA).

NOTE

If your tire size does not begin with a letter this may mean it is designated by either ETRTO (European Tire and Rim Technical Organization) or JATMA (Japan Tire Manufacturing Association).

215

“215” is the nominal width of the tire in millimeters. This three-digit number gives the width in millimeters of the tire from sidewall edge to sidewall edge. In general, the larger the number, the wider the tire.

65

“65” is the aspect ratio. This two-digit number indicates the tire's ratio of height to width.

R

“R” is the tire construction symbol. R indicates “Radial ply construction”.

15

“15” is the wheel rim diameter in inches.

95

“95” is the Load Index. This two-or three-digit number indicates how much weight each tire can support.

H

“H” is the speed rating. The speed rating denotes the maximum speed for which the use of the tire is rated.

Letter Rating	Speed Rating
Q	99 mph
R	106 mph
S	112 mph
T	118 mph
U	124 mph
H	130 mph
V	149 mph
W	168* mph
Y	186* mph

* For tires with a maximum speed capability over 149 mph, tire manufacturers sometimes use the letters ZR. For tires with a maximum speed capability over 186 mph, tire manufacturers always use the letters ZR.

M+ S or M/S: Mud and Snow

AT: All Terrain.
AS: All Season. The “M+ S” or “M/S” indicates that the tire has some functional use in mud and snow.

U.S. DOT Tire Identification Number (TIN)

This begins with the letters “DOT” which indicates the tire meets all federal standards. The next two numbers or letters are the plant code where it was manufactured, and the last four numbers represent the week and year the tire was manufactured. For example, the numbers 457 means the 45st week of 1997. After 2000 the numbers go to four digits. For example, the number 2102 means the 21th week of 2002. The other numbers are marketing codes used at the manufacturer's discretion. This information is used to contact consumers if a tire defect requires a recall.

Tire Ply Composition and Materials Used

The number of plies indicates the number of layers of rubber-coated fabric in the tire. In general, the greater the number of plies, the more weight a tire can support. Tire manufacturers also must indicate the tire materials, which include steel, nylon, polyester, and other.

Maximum Load Rating

This number indicates the maximum load in kilograms and pounds that can be carried by the tire.

Maximum Permissible Inflation Pressure

This number is the greatest amount of air pressure that should ever be put in the tire under normal driving conditions.

Tire Information (except Canada)

Tread Wear, Traction and Temperature Grades

Tread wear: The tread wear grade is a comparative rating based on the wear rate of the tire when tested under controlled conditions on a specified government test course. For example, a tire graded 150 would wear one and one-half (1 1/2) times as well on the government course as a tire graded 100.
Traction: The traction grades, from highest to lowest are AA, A, B, and C. The grades represent the tire's ability to stop on wet pavement as measured under controlled conditions on specified government test surfaces of asphalt and concrete. A tire marked C may have poor traction performance.
Temperature: The temperature grades are A (the highest), B and C, representing the tire's resistance to the generation of heat and its ability to dissipate heat when tested under controlled conditions on a specified indoor laboratory test wheel.

Snow Tires

In some heavy snow areas, local governments may require true snow tires, those with very deeply cut tread. These tires should only be used in pairs or placed on all four wheels. Make sure you purchase snow tires that are the same size and construction type as the other tires on your vehicle.

SAFETY WARNING

The following safety warning appears on the tire's sidewall.
SERIOUS INJURY MAY RESULT FROM:

- EXPLOSION OF TIRE/RIM ASSEMBLY DUE TO IMPROPER MOUNTING-MATCH TIRE DIAMETER TO RIM DIAMETER; NEVER EXCEED 40 psi (275 kPa) TO SEAT BEADS-ONLY SPECIALLY TRAINED PERSONS SHOULD MOUNT TIRES.
- TIRE FAILURE DUE TO UNDER-INFLATION/OVERLOADING/DAMAGE-FOLLOW OWNER'S MANUAL AND PLACARD IN VEHICLE-FREQUENTLY CHECK INFLATION PRESSURE AND INSPECT FOR DAMAGE.

▼Information on Temporary Tires

Please refer to the sample below.

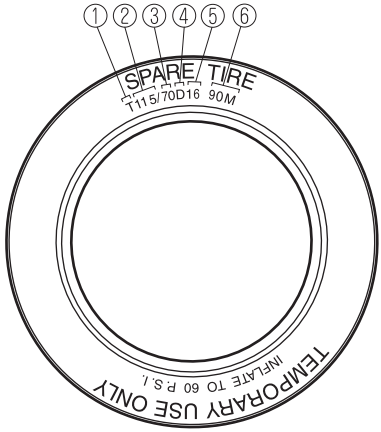

1. Temporary tires
2. Nominal width of tire in millimeters
3. Ratio of height to width (aspect ratio)
4. Diagonal
5. Rim diameter code
6. Load index & speed symbol

T115/70D 16 90M is an example of a tire size and load index rating. Here is an explanation of the various components of that tire size and load index rating. Note that the tire size and load index rating may be different from the example.

T

Indicates a tire that may be installed on cars, SUVs, minivans and light trucks as designated by the Tire and Rim Association (T&RA).

115

“115” is the nominal width of the tire in millimeters. This three-digit number gives the width in millimeters of the tire from sidewall edge to sidewall edge. In general, the larger the number, the wider the tire.

Tire Information (except Canada)

70

“70” is the aspect ratio. This two-digit number indicates the tire's ratio of height to width.

D

“D” is the tire construction symbol. D indicates “diagonal ply construction”.

16

“16” is the wheel rim diameter in inches.

90

“90” is the Load Index. This two-or three-digit number indicates how much weight each tire can support.

M

“M” is the speed rating. The speed rating denotes the maximum speed for which the use of the tire is rated.

Letter Rating	Speed Rating
M	81 mph

Location of the Tire Label (Placard)

You will find the tire label containing tire inflation pressure by tire size and other important information on the driver's side B-pillar or on the edge of the driver's door frame.

SAMPLE

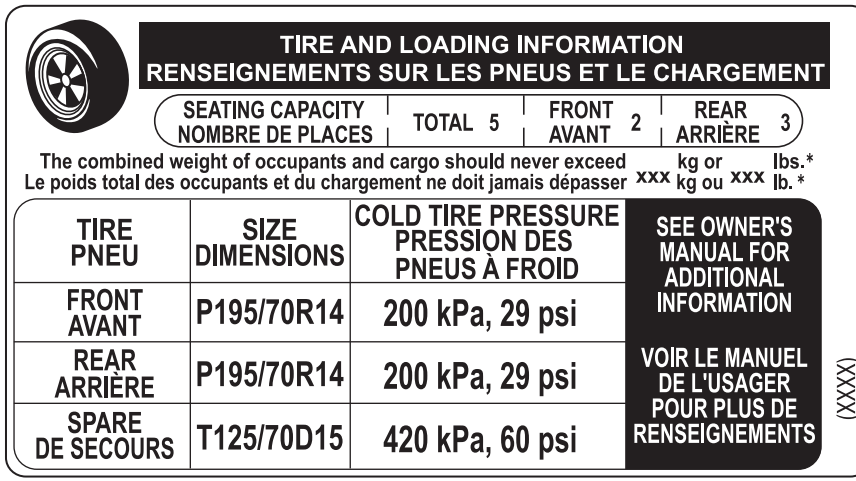

▼Recommended Tire Inflation Pressure

On the tire label you will find the recommended tire inflation pressure in both kPa and psi for the tires installed as original equipment on the vehicle. It is very important that the inflation pressure of the tires on your vehicle is maintained at the recommended pressure. You should check the tire pressure regularly to insure that the proper inflation pressure is maintained.
Refer to Tires on page 10-6.

NOTE
Tire pressures listed on the vehicle placard or tire information label indicate the recommended cold tire inflation pressure, measured when the tires are cold, after the vehicle has been parked for at least 3 hours. As you drive, the temperature in the tire warms up, increasing the tire pressure.

Tire Information (except Canada)

⚠ WARNING

Always check the tire inflation pressures on a regular basis according to the recommended tire inflation pressure on the tire label and in conjunction with the information in this owner's manual:

Driving your vehicle with under-inflated tires is dangerous.
Under-inflation is the most common cause of failures in any kind of tire and may result in severe cracking, tread separation or "blowout", with unexpected loss of vehicle control and increased risk of injury. Under-inflation increases sidewall flexing and rolling resistance, resulting in heat buildup and internal damage to the tire. It results in unnecessary tire stress, irregular wear, loss of control and accidents. A tire can lose up to half of its air pressure and not appear to be flat!
It is impossible to determine whether or not tires are properly inflated just by looking at them.

▼Checking Tire Pressure

1. When you check the air pressure, make sure the tires are cold —meaning they are not hot from driving even a mile.
2. Remove the cap from the valve on one tire.
3. Firmly press a tire gauge onto the valve.
4. Add air to achieve recommended air pressure.
5. If you overfill the tire, release air by pushing on the metal stem in the center of the valve. Then recheck the pressure with your tire gauge.
6. Replace the valve cap.
7. Repeat with each tire, including the spare.

NOTE
Some spare tires require higher inflation pressure.

8. Visually inspect the tires to make sure there are no nails or other objects embedded that could poke a hole in the tire and cause an air leak.
9. Check the sidewalls to make sure there are no gouges, cuts, bulges, cracks or other irregularities.

NOTE
Warm tires normally exceed recommended pressures. Don't release air from warm tires to adjust the pressure.
Under-inflation can cause serious failures and accidents.
Over-inflation can produce a harsh ride and the greater possibility of damage from road hazards.

▼Glossary of Terms

Tire Placard: A label indicating the OE tire sizes, recommended inflation pressure, and the maximum weight the vehicle can carry.
Tire Identification Number (TIN): A number on the sidewall of each tire providing information about the tire brand and manufacturing plant, tire size, and date of manufacture.
Inflation Pressure: A measure of the amount of air in a tire.
kPa: Kilopascal, the metric unit for air pressure.
psi: Pounds per square inch, the English unit for air pressure.
B-pillar: The structural member at the side of the vehicle behind the front door.
Original Equipment (OE): Describes components originally equipped on the vehicle.
Vehicle Load Limit: The maximum value of the combination weight of occupants and cargo.
Bead Area of the Tire: Area of the tire next to the rim.
Sidewall Area of the Tire: Area between the bead area and the tread.
Tread Area of the Tire: Area on the perimeter of the tire that contacts the road when it's mounted on the vehicle.

Seating capacity means the total allowable number of vehicle occupants. Seating capacity is described on the tire label.

Production options weight is the combination weight of installed regular production options weighing over 2.3 kilograms in excess of the standard items which they replace, and not previously considered in the curb weight or accessory weight, including heavy duty brakes, ride levelers, roof rack, heavy duty battery, and special trim.

Rim is the metal support (wheel) for a tire or a tire and tube assembly upon which the tire beads are seated.

Tire Maintenance

Improper or inadequate vehicle maintenance can cause tires to wear abnormally. Here are some important maintenance points:

▼Tire Inflation Pressure

Inspect all tire pressure monthly (including the spare) when the tires are cold. Maintain recommended pressures for the best ride, top handling, and minimum tire wear. Use the pressures specified on the vehicle tire information placard or tire label for optimum service.

▼Tire Rotation

To equalize tread wear, rotate the tires every 12,000 km (7,500 miles) or sooner if irregular wear develops. During rotation, inspect them for correct balance.

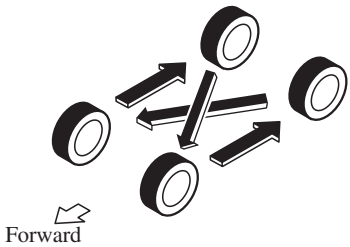

Do not include (TEMPORARY USE ONLY) spare tire in rotation.

Inspect the tires for uneven wear and damage. Abnormal wear is usually caused by one or a combination of the following:

- Incorrect tire pressure
- Improper wheel alignment
- Out-of-balance wheel
- Severe braking

After rotation, inflate all tire pressures to specification (page 10-6) and inspect the lug nuts for tightness.

⚠ CAUTION

Rotate unidirectional tires and radial tires that have an asymmetrical tread pattern or studs only from front to rear, not from side to side. Tire performance will be weakened if rotated from side to side.

▼Replacing a Tire

⚠ WARNING

Always use tires that are in good condition:

Driving with worn tires is dangerous. Reduced braking, steering, and traction could result in an accident.

If a tire wears evenly, a wear indicator will appear as a solid band across the tread. Replace the tire when this happens.

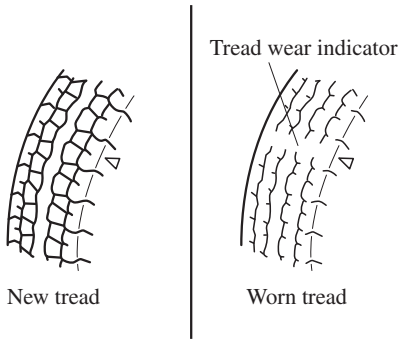

You should replace the tire before the band crosses the entire tread.

NOTE

Tires degrade over time, even when they are not being used on the road. It is recommended that tires generally be replaced when they are 6 years or older. Heat caused by hot climates or frequent high loading conditions can accelerate the aging process. You should replace the spare tire when you replace the other road tires due to the aging of the spare tire. The period in which the tire was manufactured (both week and year) is indicated by a 4-digit number.

Refer to Tire Labeling on page 9-25.

▼Safety Practices

The way you drive has a great deal to do with your tire mileage and safety. So cultivate good driving habits for your own benefit.

- Observe posted speed limits and drive at speeds that are safe for the existing weather conditions
- Avoid fast starts, stops and turns
- Avoid potholes and objects on the road
- Do not run over curbs or hit the tire against the curb when parking

Tire Information (except Canada)

⚠ CAUTION

If you feel a sudden vibration or ride disturbance while driving or you suspect your tire or vehicle has been damaged, immediately reduce your speed. Drive with caution until you can safely pull off the road. Stop and inspect the tire for damage. If the tire is under-inflated or damaged, deflate it, remove the tire and rim and replace it with your spare tire. If you cannot detect a cause, have the vehicle towed to the nearest vehicle or tire dealer to have the vehicle inspected.

Vehicle Loading

This section will guide you in the proper loading of your vehicle and/or trailer, to keep your loaded vehicle weight within its design rating capability, with or without a trailer. Properly loading your vehicle will provide maximum return of vehicle design performance. Before loading your vehicle, familiarize yourself with the following terms for determining your vehicle's weight ratings, with or without a trailer, from the vehicle's Safety Certification Label and Tire and Load Information Label:

WARNING

Overloaded Vehicle:

Overloading a vehicle is dangerous. The results of overloading can have serious consequences in terms of passenger safety. Too much weight on a vehicle's suspension system can cause spring or shock absorber failure, brake failure, handling or steering problems, irregular tire wear, tire failure or other damage. Overloading makes a vehicle harder to drive and control. It also increases the distance required for stopping. In cases of serious overloading, brakes can fail completely, particularly on steep grades. The load a tire will carry safely is a combination of the size of the tire, its load range, and corresponding inflation pressure.

Never overload the vehicle and always observe the vehicle's weight ratings from the vehicle's Safety Certification and Tire and Load Information labels.

Base Curb Weight is the weight of the vehicle including a full tank of fuel and all standard equipment. It does not include passengers, cargo, or optional equipment.

Vehicle Curb Weight is the weight of your new vehicle when you picked it up from your dealer plus any aftermarket equipment.

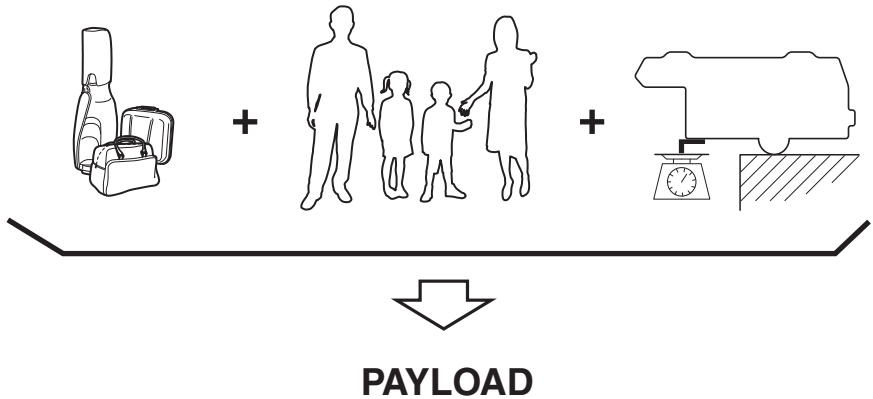

Tire Information (except Canada)

Payload is the combination weight of cargo and passengers that the vehicle is designed to carry. The maximum payload for your vehicle can be found on the Tire and Load Information label on the driver's door frame or door pillar. Look for “THE COMBINATION WEIGHT OF OCCUPANTS AND CARGO SHOULD NEVER EXCEED XXX kg or XXX lbs” for your maximum payload. The payload listed on the tire label is the maximum payload for the vehicle as built by the assembly plant. If any aftermarket or dealer installed equipment has been installed on the vehicle, the weight of the equipment must be subtracted from the payload listed on the tire label in order to be accurate.

SAMPLE

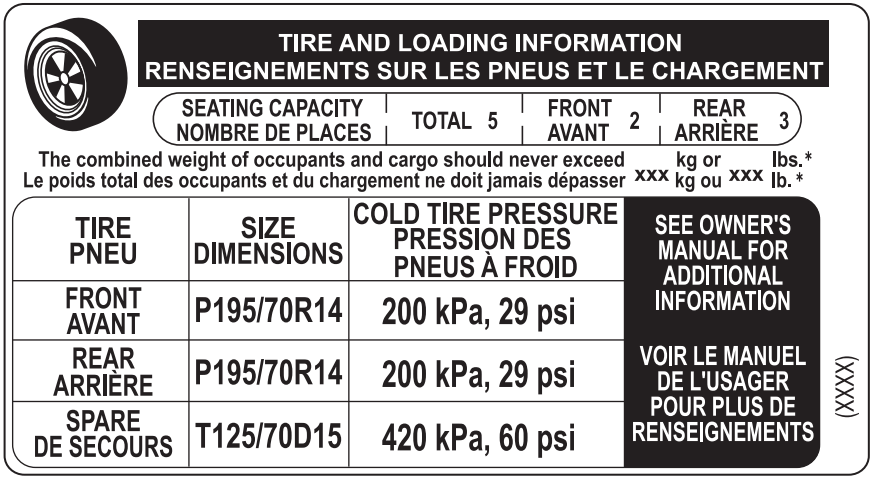

TIRE AND LOADING INFORMATION
RENSEIGNEMENTS SUR LES PNEUS ET LE CHARGEMENT

SEATING CAPACITY NOMBRE DE PLACES	TOTAL 5	FRONT AVANT 2	REAR ARRIÈRE 3

The combined weight of occupants and cargo should never exceed XXX kg or lbs.*
Le poids total des occupants et du chargement ne doit jamais dépasser XXX kg ou lb.*

TIRE PNEU	SIZE DIMENSIONS	COLD TIRE PRESSURE PRESSION DES PNEUS À FROID	SEE OWNER'S MANUAL FOR ADDITIONAL INFORMATION VOIR LE MANUEL DE L'USAGER POUR PLUS DE RENSEIGNEMENTS
FRONT AVANT	P195/70R14	200 kPa, 29 psi	
REAR ARRIÈRE	P195/70R14	200 kPa, 29 psi	
SPARE DE SECOURS	T125/70D15	420 kPa, 60 psi	

(XXXX)

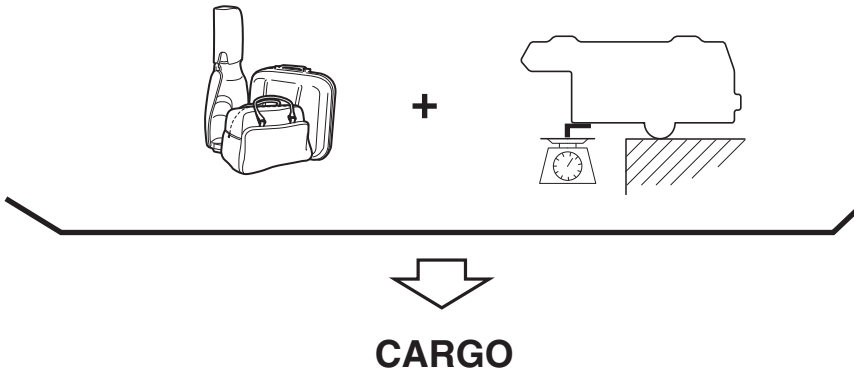

Cargo Weight includes all weight added to the Base Curb Weight, including cargo and optional equipment. When towing, trailer tongue load or king pin weight is also part of cargo weight.

The cargo weight limit decreases depending on the number of vehicle occupants. The cargo weight limit can be calculated by subtracting the total weight of the vehicle occupants from the “combination weight of occupants and cargo should never exceed” value on the tire label.

Examples: Based on a single occupant weight of 68 kg (150 lbs), and a value of 385 kg (849 lbs) for the “combination weight of occupants and cargo should never exceed”:
The cargo weight limit with one occupant is 385 kg (849 lbs) – 68 kg (150 lbs) = 317 kg (699 lbs)
The cargo weight limit with two occupants is 385 kg (849 lbs) – (68 × 2) kg ((150 × 2) lbs) = 249 kg (549 lbs)
If the weight of the occupant increases, the cargo weight limit decreases by that much.

GAW (Gross Axle Weight) is the total weight placed on each axle (front and rear) - including vehicle curb weight and all payload.

Tire Information (except Canada)

GAWR (Gross Axle Weight Rating) is the maximum allowable weight that can be carried by a single axle (front or rear). **These numbers are shown on the Safety Compliance Certification Label located on the driver's door frame or door pillar. The total load on each axle must never exceed its GAWR.**

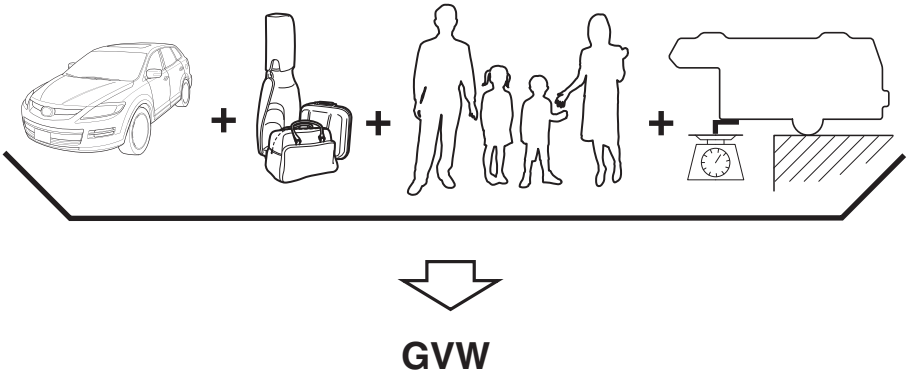

GVW (Gross Vehicle Weight) is the Vehicle Curb Weight + cargo + passengers.

GVWR (Gross Vehicle Weight Rating) is the maximum allowable weight of the fully loaded vehicle (including all options, equipment, passengers and cargo). **The GVWR is shown on the Safety Compliance Certification Label located on the driver's door frame or door pillar. The GVW must never exceed the GVWR.**

Tire Information (except Canada)

SAMPLE

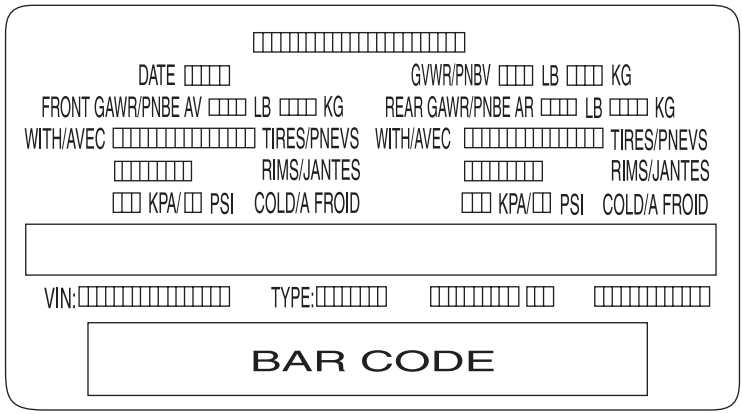

WARNING

Exceeding Axle Weight Rating Limits:

Exceeding the Safety Certification Label axle weight rating limits is dangerous and could result in death or serious injury as a result of substandard vehicle handling, performance, engine, transmission and/or structural damage, serious damage to the vehicle, or loss of control.

Always keep the vehicle within the axle weight rating limits.

Do not tow a trailer with this vehicle:

Towing a trailer with this vehicle is dangerous because it has not been designed to tow a trailer and doing so will affect the drive system which could result in vehicle damage.

Tire Information (except Canada)

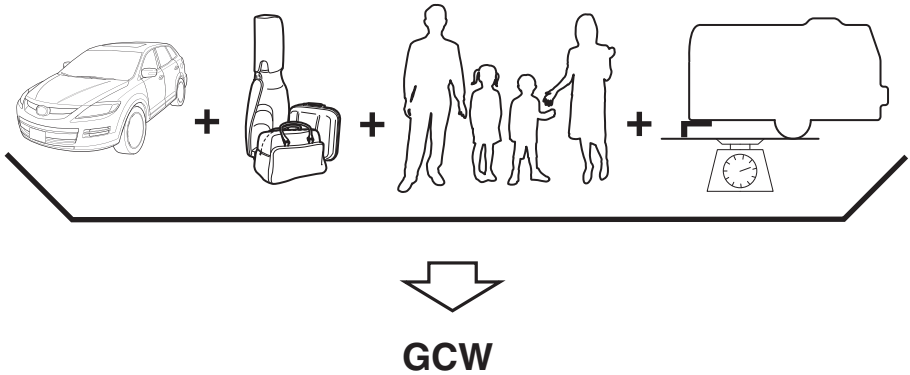

GCW (Gross Combination Weight) is the weight of the loaded vehicle (GVW) plus the weight of the fully loaded trailer.

GCWR (Gross Combination Weight Rating) is the maximum allowable weight of the vehicle and the loaded trailer - including all cargo and passengers - that the vehicle can handle without risking damage. (Important: The towing vehicle's braking system is rated for operation at GVWR, not at GCWR. Separate functional brakes should be used for safe control of towed vehicles and for trailers weighing more than 1,500 lbs). **The GCW must never exceed the GCWR.**

Maximum Loaded Trailer Weight is the highest possible weight of a fully loaded trailer the vehicle can tow. It assumes a vehicle with only mandatory options, no cargo (internal or external), a tongue load of 10–15% (conventional trailer) or king pin weight of 15–25% (fifth-wheel trailer), and driver only (150 lbs). **Consult your dealership (or the RV and Trailer Towing Guide provided by your dealership) for more detailed information. Tongue Load or Fifth-Wheel King Pin Weight** refers to the amount of the weight that a trailer pushes down on a trailer hitch.

Examples: For a 5000 lb conventional trailer, multiply 5000 by 0.10 and 0.15 to obtain a proper tongue load range of 500 to 750 lbs. For an 11,500 lb fifth-wheel trailer, multiply by 0.15 and 0.25 to obtain a proper king pin load range of 1,725 to 2,875 lbs.

WARNING

Exceeding GVWR or GAWR Specifications:

Exceeding the GVWR or the GAWR specified on the certification label is dangerous. Exceeding any vehicle rating limitation could result in a serious accident, injury, or damage to the vehicle.

Do not use replacement tires with lower load carrying capacities than the originals because they may lower the vehicle's GVWR and GAWR limitations. Replacement tires with a higher limit than the originals do not increase the GVWR and GAWR limitations.

Never exceed the GVWR or the GAWR specified on the certification label.

Steps for Determining the Correct Load Limit

Steps for Determining Correct Load Limit-

(1) Locate the statement “The combined weight of occupants and cargo should never exceed XXX kg or XXX lbs.” on your vehicle's placard.
(2) Determine the combined weight of the driver and passengers that will be riding in your vehicle.
(3) Subtract the combined weight of the driver and passengers from XXX kg or XXX lbs.
(4) The resulting figure equals the available amount of cargo and luggage load capacity. For example, if the “XXX” amount equals 1400 lbs. and there will be five 150 lb passengers in your vehicle, the amount of available cargo and luggage load capacity is 650 lbs. (1400 – 750 (5 × 150) = 650 lbs.)
(5) Determine the combined weight of luggage and cargo being loaded on the vehicle. That weight may not safely exceed the available cargo and luggage load capacity calculated in Step 4.
(6) If your vehicle will be towing a trailer, load from your trailer will be transferred to your vehicle. Consult this manual to determine how this reduces the available cargo and luggage load capacity of your vehicle.

Reporting Safety Defects (U.S.A.)

If you believe that your vehicle has a defect which could cause a crash or could cause injury or death, you should immediately inform the National Highway Traffic Safety Administration (NHTSA) in addition to notifying Mazda Motor Corporation (Your Mazda Importer/Distributor).

If NHTSA receives similar complaints, it may open an investigation, and if it finds that a safety defect exists in a group of vehicles, it may order a recall and remedy campaign. However, NHTSA cannot become involved in individual problems between you, your dealer, or Mazda Motor Corporation (Your Mazda Importer/Distributor).

To contact NHTSA, you may call the Vehicle Safety Hotline toll-free at 1-888-327-4236 (TTY:1-800-424-9153); go to http://www.safercar.gov; or write to: Administrator, NHTSA, 1200 New Jersey Avenue, SE., Washington, DC, 20590. You can also obtain other information about motor vehicle safety from http://www.safercar.gov.

NOTE
If you live in the U.S.A., all correspondence to Mazda Motor Corporation should be forwarded to:

Mazda North American Operations
7755 Irvine Center Drive
Irvine, California 92618-2922
or
P.O. Box 19734
Irvine, CA 92623-9734
Customer Assistance Center or toll free at 1 (800) 222-5500

If you live outside of the U.S.A., please contact the nearest Mazda Distributor shown (page 9-13) in this booklet.

Reporting Safety Defects (Canada)

Canadian customers who wish to report a safety-related defect to Transport Canada, Defect Investigations and Recalls, may telephone the toll free hotline 1-800-333-0510, or contact Transport Canada by mail at: Transport Canada, ASFAD, Place de Ville Tower C, 330 Sparks Street, Ottawa ON K1A 0N5.

For additional road safety information, please visit the Road Safety website at: http://www.tc.gc.ca/roadsafety/menu.htm

Service Publications

Factory-authorized Mazda service publications are available for owners who wish to do some of their own maintenance and repair.

When requesting any of our publications through an Authorized Mazda Dealer, refer to the chart below.

If they do not have what you need in stock, they can order it for you.

PUBLICATION ORDER NUMBER	PUBLICATION DESCRIPTION
9999-95-003B-13	2013 WORKSHOP MANUAL (English)
9999-MX-003B-13	2013 WORKSHOP MANUAL (Spanish)
9999-95-009G-13	2013 WIRING DIAGRAM (English)
9999-MX-009G-13	2013 WIRING DIAGRAM (Spanish)
9999-95-011C-13	2013 OWNER'S MANUAL (English)
9999-EC-011C-13	2013 OWNER'S MANUAL (English and French)
9999-PR-011C-13	2013 OWNER'S MANUAL (Spanish)
9999-95-001F-13	2013 SERVICE HIGHLIGHTS
9999-95-NAV1-13	2013 NAVIGATION SYSTEM OWNER'S MANUAL (English)
9999-EC-NAV1-13	2013 NAVIGATION SYSTEM OWNER'S MANUAL (English and French)
9999-PR-NAV1-13	2013 NAVIGATION SYSTEM OWNER'S MANUAL (Spanish)

▼WORKSHOP MANUAL:

Covers recommended maintenance and repair procedures of the drive train, body and chassis.

▼WIRING DIAGRAM:

Provides electrical schematics as well as component location for the entire electrical system.

▼OWNER'S MANUAL:

This booklet contains information regarding the proper care and operation of your vehicle. This is not a technician's manual.

Service Publications

▼SERVICE HIGHLIGHTS:

Provides description and operation of the many systems of your Mazda.

▼NAVIGATION SYSTEM OWNER'S MANUAL:

This booklet contains information regarding the proper operation and use of the navigation system. This is not a technician's manual.

10 Specifications

Technical information about your Mazda.

Identification Numbers **10-2**
Vehicle Information Labels 10-2

Specifications **10-4**
Specifications 10-4

Personalization Features **10-8**
Personalization Features 10-8

Vehicle Information Labels

▼Vehicle Identification Number

The vehicle identification number legally identifies your vehicle. The number is on a plate attached to the cowl panel located on the left corner of the dashboard. This plate can easily be seen through the windshield.

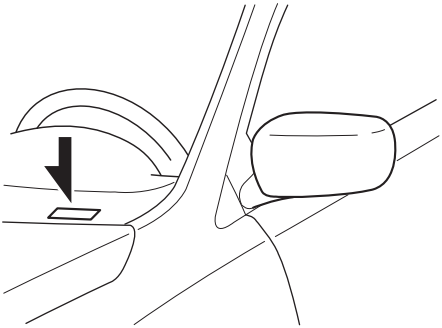

▼Motor Vehicle Safety Standard Label*

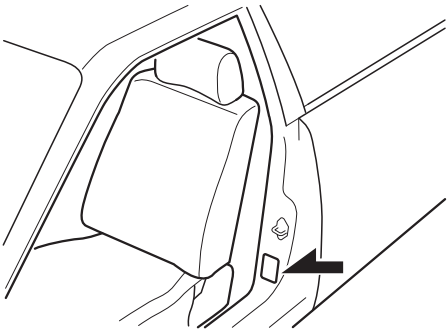

▼Chassis Number

Open the cover shown in the figure to check the chassis number.

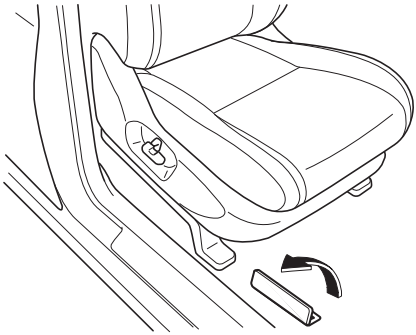

▼Vehicle Emission Control Information Label

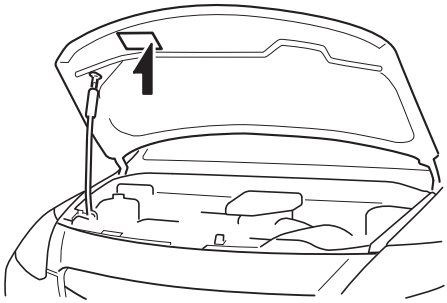

*Some models.

▼Tire Pressure Label

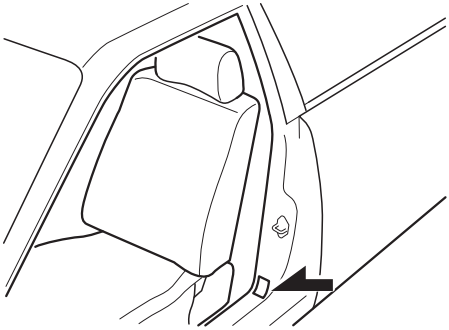

▼Engine Number

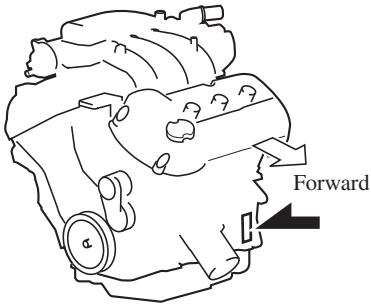

Specifications

▼Engine

Item	Specification
Type	DOHC-24V 60°V, 6-cylinder
Bore×Stroke	95.5 × 86.7 mm (3.75 × 3.41 in)
Displacement	3,726 ml (3,726 cc, 227.4 cu in)
Compression ratio	10.3

▼Electrical System

Item	Classification	
Battery	12V-65Ah/20HR	
Spark-plug number	Mazda Genuine spark plug	CY02-18-110

⚠ CAUTION

When cleaning the platinum plugs, do not use a wire brush. The fine particulate coating on the platinum alloy could be damaged.

▼Lubricant Quality

Lubricant	Classification
Engine oil	Refer to Recommended Oil on page 8-21.
Automatic transaxle fluid	Mazda Genuine JWS3309
Transfer case oil	API Service GL-5 (SAE 75W-140)
Rear differential oil	API Service GL-5 (SAE 80W-90)
Power steering fluid	Mazda Genuine ATF M-III, M-V, or equivalent (e.g. Dexron® II)
Brake fluid	SAE J1703, or FMVSS116 DOT-3

NOTE

Refer to Introduction on (page 8-2) for owner's responsibility in protecting your investment.

▼Capacities

(Approximate Quantities)

Item			Capacity
Engine oil	With oil filter replacement		5.2 L (5.5 US qt, 4.6 Imp qt)
	Without oil filter replacement		4.7 L (5.0 US qt, 4.2 Imp qt)
Coolant	Mexico		12.1 L (12.8 US qt, 10.6 Imp qt)
	Except Mexico	With Towing Package	12.1 L (12.8 US qt, 10.6 Imp qt)
		Without Towing Package	11.5 L (12.2 US qt, 10.1 Imp qt)
Automatic transaxle fluid			6.6 L (7.0 US qt, 5.8 Imp qt)
Transfer case oil			0.532 L (0.562 US qt, 0.468 Imp qt)
Rear differential oil			1.0 L (1.1 US qt, 0.9 Imp qt)
Washer fluid			4.5 L (4.8 US qt, 4.0 Imp qt)
Fuel tank			76.0 L (20.1 US gal, 16.7 Imp gal)

Check oil and fluid levels with dipsticks or reservoir gauges.

▼Dimensions

Item		Vehicle specification
Overall length	Without license plate holder	5,096 mm (200.6 in)
	With license plate holder	5,106 mm (201.0 in)
Overall width		1,936 mm (76.2 in)
Overall height		1,728 mm (68.0 in)
Front tread		1,654 mm (65.1 in)
Rear tread		1,644 mm (64.7 in)
Wheelbase		2,875 mm (113.2 in)

▼Weights

Item		Weight	
		2WD	AWD
GVWR (Gross Vehicle Weight Rating)		2,645 kg (5,831 lbs)	2,720 kg (5,997 lbs)
GAWR (Gross Axle Weight Rating)	Front	1,276 kg (2,813 lbs)	1,307 kg (2,881 lbs)
	Rear	1,400 kg (3,086 lbs)	1,458 kg (3,214 lbs)

▼Air Conditioner

Item	Classification
Refrigerant Type	HFC134a (R-134a)

▼Light Bulbs

Exterior light

Light bulb			Category	
			Wattage	ECE R (SAE)
Headlights	Halogen	High beam	60	HB3 (HB3)
		Low beam	55	H11 (H11)
	Xenon fusion	High/Low beam	35	D4S (D4S)
Daytime running lights	With halogen headlights		60	HB3 (HB3)
	With xenon fusion headlights		LED*1	— (—)
Parking lights	With halogen headlights		5	W5W (4CP)
	With xenon fusion headlights		LED*1	— (—)
Front turn signal lights			21	WY21W (23CP)
Front side-marker lights			5	WY5W (3CP)
Fog lights*			55	H11 (H11)
Side turn signal lights*			LED*1	— (—)
High-mount brake light			LED*1	— (—)
Rear turn signal lights			21	WY21W (22.3CP)
Taillights/Brake lights			21/5	W21/5W (7443)
Taillights (Liftgate side)			5	W5W (4CP)
Reverse lights			16	W16W (921)
License plate lights			5	W5W (4CP)
Rear side-marker lights			5	W5W (4CP)

*1 LED is the abbreviation for Light Emitting Diode.

Interior light

Light bulb	Category	
	Wattage	ECE R
Overhead lights (Front)/Map lights	8	—
Overhead light (Center)	10	—
Overhead light (Rear)	10	—
Courtesy lights	5	T10
Vanity mirror lights	2	—
Luggage compartment light	10	—

▼Tires

NOTE

The tires have been optimally matched with the chassis of your vehicle.
When replacing tires, Mazda recommends that you replace tires of the same type originally fitted to your vehicle. For details, contact an Authorized Mazda Dealer.

*Some models.

Check the tire pressure label for tire size and inflation pressure.
Refer to Tire Inflation Pressure on page 8-34.

Standard tire

Tire size	Inflation pressure	
	Front	Rear
P245/60R18 104H	250 kPa (36 psi)	250 kPa (36 psi)
P245/50R20 102V	230 kPa (34 psi)	230 kPa (34 psi)

Temporary spare tire

(Except Mexico)

Tire size	Inflation pressure
T155/90D18 103M	420 kPa (60 psi)

(Mexico)

Tire size	Inflation pressure
195/80R17 99M	250 kPa (36 psi)

▼Fuses

Refer to Fuses on page 8-49.

Personalization Features

The following “Personalization Features” are available. These settings can only be changed by an Authorized Mazda Dealer.

Item	Feature	Factory Setting	Available Settings
Auto headlight on/off	The headlight illumination on/off timing based on surrounding lightness/darkness can be changed	Standard (Illuminates under average levels of darkness)	Later
Auto headlight off	The time required for headlights to turn off after ignition is switched off can be changed	30 seconds	0/60/120 seconds
Blind spot warning	The warning beep function can be changed	Activated	Deactivated
Advanced keyless entry	The advanced key's remaining battery level warning light in the instrument cluster can be deactivated	Activated	Deactivated
	The beep sound which is heard when locking/unlocking all doors or the liftgate can be deactivated*1	Activated	Deactivated
	The function to automatically lock the doors and the liftgate when leaving the vehicle while carrying the key can be activated*2	Deactivated	Activated
	The method for unlocking the doors using the request switch can be selected	Press × 2	Press × 1
	The method for unlocking the doors using the transmitter switch can be selected	Press × 2	Press × 1
	The time required for the doors to relock automatically after unlocking with the transmitter can be changed	30 seconds	60/90 seconds
Daytime running lights	The function of the daytime running lights can be changed	On	Off

*1 When the autolock function is operating, the warning sound will be heard regardless of the setting.
*2 When the autolock function is enabled, windows will not automatically close. You must close them before leaving vehicle.

11 Index

A

Accessory Socket 6-175
Add-On Non-Genuine Parts and Accessories 9-20
Advanced Key 3-2
Advanced key maintenance 3-5
Advanced key suspend function 3-17
Auxiliary key 3-17
Locking, unlocking with request switch 3-8
Operational range 3-7
Remote control function 3-13
Service 3-7
Warning and beep sounds 3-18
When warning indicator/beep is activated 3-20
Air Bag Systems 2-54
All-Wheel Drive (AWD) Operation 5-17
AWD warning light 5-18
Ambient Temperature Display 6-166
Antenna 6-17
Anti-Lock Brake System (ABS) 5-8
Warning light 5-9
Appearance Care 8-56
Armrest Box 6-173
Audio System 6-17
Audio control switch 6-50
Audio set 6-29
AUX/USB/iPod Mode 6-52
Operating tips for audio system 6-17
Safety certification 6-63
Automatic Transaxle
Driving tips 5-16
Manual shift mode 5-13
Shift-lock system 5-13
Transaxle ranges 5-12

B

Battery
Emergency starting 7-18
Maintenance 8-32
Specifications 10-4
Beep Sounds
Blind spot monitoring system warning 5-64
Ignition key reminder 5-63
Lights-on reminder 5-63
Parking brake reminder 5-64
Seat belt warning 5-63
Tire inflation pressure warning ... 5-64
Before Starting the Engine 4-5
After getting in 4-5
Before getting in 4-5
Blind Spot Monitoring (BSM) System 5-34
BSM OFF Indicator Light 5-36
BSM OFF Switch 5-37
Care of radar sensors 5-37
Warning Light/Beep 5-36
Bluetooth® 6-116
Bluetooth® Audio 6-141
Bluetooth® Hands-Free 6-122
Safety Certification 6-149
Troubleshooting 6-145
Body Lubrication 8-27
Bottle Holder 6-171
Brake
Fluid 8-25
Brakes
Anti-lock brake system (ABS) 5-8
Brakes assist 5-10
Foot brake 5-5
Pad wear indicator 5-10
Parking brake 5-7
Warning light 5-8
Break-In Period 4-6

B

Bulb Replacement 8-40

C

Capacities 10-5
Carbon Monoxide 4-4
Cargo Securing Loops 6-173
Cargo Sub-Compartment 6-173
Catalytic Converter 4-3
Cell Phones 9-21
Center Console 6-173
Child Restraint
    Child restraint precautions 2-35
    Child-restraint system installation position 2-40
    Installing child-restraint systems 2-41
    LATCH child-restraint systems 2-49
Child Safety Locks for Rear Doors ... 3-32
Climate Control System 6-2
    Gas specifications 10-5
Clock 6-166
Courtesy Lights 6-164
Cruise Control 5-20
Cup Holder 6-169
Customer Assistance 9-2

D

Dashboard Illumination 5-48
Daytime Running Lights 5-70
Defroster
    Mirror 5-79
    Rear window 5-78
Dimensions 10-5
Door Locks 3-28
Driving In Flooded Area 4-12

D

Driving on Uneven Road 4-13
Driving Tips 4-6
    Automatic transaxle 5-16
    Break-in period 4-6
    Driving in flooded area 4-12
    Driving on uneven road 4-13
    Hazardous driving 4-7
    Money-saving suggestions 4-6
    Rocking the vehicle 4-9
    Winter driving 4-10
Dynamic Stability Control (DSC)/Roll Stability Control (RSC) 5-26
    TCS/DSC/RSC Indicator light.... 5-27

E

Emergency Starting 7-18
    Jump-starting 7-18
    Push-starting 7-20
Emergency Towing 7-21
Emission Control System 4-3
Engine
    Coolant 8-23
    Exhaust gas 4-4
    Hood release 3-49
    Oil 8-21
    Overheating 7-16
    Starting 5-4
Engine Compartment Overview 8-20
Engine Coolant
    Overheating 7-16
Engine Coolant Temperature Gauge 5-47
Event Data Recorder 9-22
Exhaust Gas 4-4
Exterior Care 8-58

F

Flasher
Hazard warning 5-80
Headlights 5-65
Flat Tire 7-3
Changing 7-8
Spare tire and tool storage 7-3
Fluids
Classification 10-4
Owner maintenance 8-17
Fog Lights 5-72
Foot Brake 5-5
Front Seats
(Electrically Operated Seats) 2-4
Front Seats
(Manually Operated Seats) 2-2
Fuel
Filler lid and cap 3-47
Gauge 5-48
Requirements 4-2
Tank capacity 10-5
Fuses 8-49
Panel description 8-51
Replacement 8-49

G

Glove Compartment 6-172

H

Hazard Warning Flasher 5-80
Hazardous Driving 4-7
Headlights
Control 5-65
Flashing 5-69
High-low beam 5-68
Leveling 5-70
On reminder 5-68

H

HomeLink Wireless Control
System 5-81
Hood Release 3-49
Horn 5-79

I

Ignition
Keys 3-21
Switch 5-2
Illuminated Entry System 6-163
Immobilizer System
(with Advanced Key) 3-53
Immobilizer System
(without Advanced Key) 3-57
Indicator Lights 5-49
BSM OFF 5-62
Cruise 5-61
Headlight high-beam 5-60
Security 5-60
Shift position 5-60
TCS OFF 5-61
TCS/DSC/RSC 5-61
Turn-signal/hazard warning 5-62
Information Display 6-165
Ambient temperature display 6-166
Climate control display 6-166
Clock 6-166
Information display functions 6-165
Trip computer 6-167
Instrument Cluster 5-45
Interior Care 8-62
Interior Lights 6-163

J

Jump-Starting 7-18

K

Keyless Entry System 3-22
Keys 3-21

L

Label Information 10-2
Lane-Change Signals 5-71
Liftgate 3-33
Light Bulbs
    Replacement 8-40
    Specifications 10-6
Lighting Control 5-65
Lubricant Quality 10-4
Luggage Compartment Light 6-164

M

Maintenance
    Introduction 8-2
    Owner maintenance precautions 8-18
    Owner maintenance schedule 8-17
    Scheduled 8-4
Map Lights 6-164
Mirror Defroster 5-79
Mirrors
    Outside mirrors 3-64
    Rearview mirror 3-66
Money-Saving Suggestions 4-6
Moonroof 3-50

O

Odometer and Trip Meter 5-46
Outside Mirrors 3-64
Overhead Console 6-172
Overhead Lights 6-163
Overheating 7-16

O

Overloading 4-12

P

Paint Damage 8-56
Parking Brake 5-7
Parking in an Emergency 7-2
Parking Sensor System 5-40
    Park assist sensor switch 5-42
    Parking sensor warning beep 5-43
    Sensor detection range 5-42
    When warning indicator/beep is activated 5-44
Personalization Features 10-8
Power Door Locks 3-29
Power Liftgate 3-35
Power Outlet 6-177
Power Steering 5-17
    Fluid 8-26
Power Windows 3-40
Push-Starting 7-20

R

Rear Coat Hooks 6-174
Rear Door Child Safety Locks 3-32
Rear Entertainment System 6-64
    Before operation 6-77
    Country code list 6-108
    Language code list 6-106
    Sound output 6-83
Rear View Monitor 6-151
Rear Window Defroster 5-78
Rear Window Washer 5-78
Rear Window Wiper 5-77
Rearview Mirror 3-66
Recreational Towing 7-24

R

Registering Your Vehicle in A Foreign Country 9-19
Rocking the Vehicle 4-9
Roll-over 4-8

S

Safety Defects, Reporting 9-45
Seat Belt System
3-point type 2-23
Automatic locking 2-22
Center-rear lap/shoulder 2-28
Emergency locking 2-21
Extender 2-32
Pregnant women 2-21
Pretensioner and load limiting 2-25
Seat belt precautions 2-19
Seat belt reminder 2-34
Warning light 2-33
Seats
Front seat (Electrically operated seats) 2-4
Front seat (Manually operated seats) 2-2
Seat warmer 2-17
Second-row seats 2-9
Third-row seat 2-13
Second-Row Seats 2-9
Security System
Immobilizer system (with advanced key) 3-53
Immobilizer system (without advanced key) 3-57
Theft-deterrent system 3-61
Service Publications 9-47
Shopping Bag Hook 6-174
Side Extension Sunvisors 6-162
Spare Tire and Tool Storage 7-3

S

Specifications 10-4
Speedometer 5-46
SRS Air Bags
Driver and front passenger occupant classification system 2-68
How the SRS air bags work 2-61
Limitations to SRS air bag 2-66
Monitoring and maintenance 2-73
SRS air bag deployment criteria 2-65
Supplemental restraint system (SRS) precautions 2-54
Supplemental restraint system components 2-60
Starting the Engine 5-4
Steering Wheel 3-64
Horn 5-79
Storage Compartments 6-172
Armrest box 6-173
Cargo securing loops 6-173
Cargo sub-compartment 6-173
Center console 6-173
Glove compartment 6-172
Overhead console 6-172
Rear coat hooks 6-174
Shopping bag hook 6-174
Sunshade 3-52
Sunvisors 6-162

T

Tachometer 5-47
Temporary Spare Tire 8-37
Theft-Deterrent System 3-61
Third-Row Seat 2-13
Tiedown
Hook 7-22
Tire Information 9-25

T

Tire Pressure Monitoring System 5-28
System error activation 5-32
Tire pressure monitoring system warning light 5-30
Tires and wheels 5-32
Tires
Flat tire 7-3
Inflation pressure 8-34
Replacement 8-36
Rotation 8-35
Snow tires 4-10
Spare tire and tool storage 7-3
Specifications 10-6
Tire chains 4-11
Uniform tire quality grading system (UTQGS) 9-23
Tool 7-3
Towing
Description 7-21
Emergency towing 7-21
Recreational towing 7-24
Trailer Towing (U.S.A. and Canada) 4-14
Traction Control System (TCS) 5-23
TCS OFF indicator light 5-24
TCS OFF switch 5-25
TCS/DSC/RSC indicator light.... 5-24
Trailer Towing 4-14
Trip Meter 5-46
Turn and Lane-Change Signals 5-71

V

Vanity Mirrors 6-162
Vehicle Information Labels 10-2

W

Warning Lights 5-49
ABS 5-52
Air bag system 5-54
Automatic transaxle 5-55
AWD 5-56
Brake system 5-51
Charging system 5-53
Check engine 5-54
Check fuel cap 5-55
Door-ajar 5-55
Engine oil pressure 5-53
Front seat belt pretensioner system 5-54
KEY warning light (red)/KEY indicator light (green) 5-58
Low fuel 5-55
Low washer fluid level 5-55
Malfunction 5-52
Seat belt 5-55
Tire pressure monitoring system 5-56
Warranty 9-15
Washer Fluid 8-26
Weights 10-5
Wheel Replacement 8-38
Windows
Power windows 3-40
Windshield Washer 5-77
Windshield Wipers 5-73
Blades replacement 8-28
Winter Driving 4-10